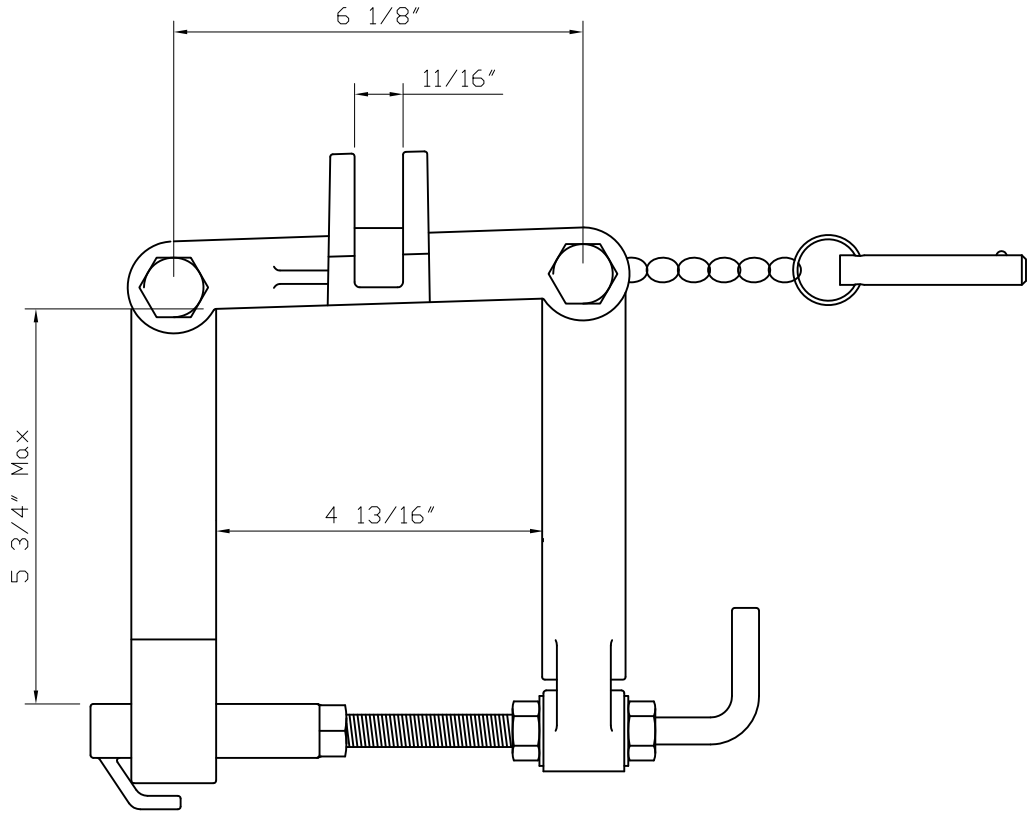

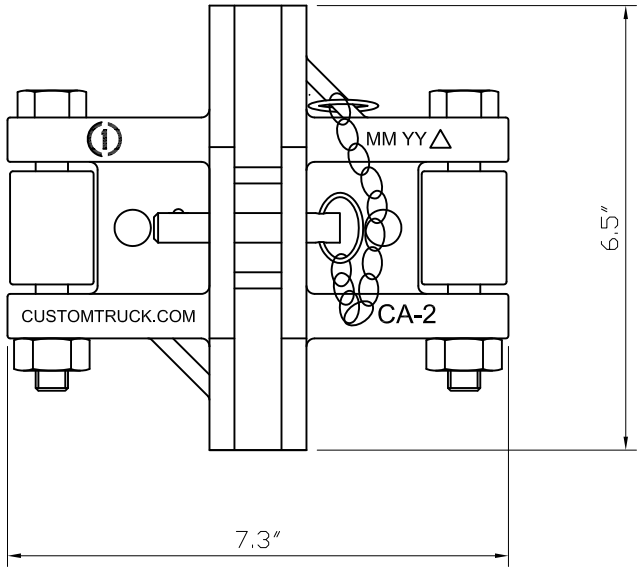

THE INFORMATION AND DATA CONTAINED HEREIN ARE THE EXCLUSIVE PROPERTY OF CUSTOM TRUCK ONE SOURCE AND NO REPRODUCTION IS PERMITTED.

UNLESS OTHERWISE SPECIFIED:

Dimensions given in Inches

WEIGHT: 4.9Lbs

CUSTOM TRUCK ONE SOURCE

CROSSARM BRACKET

A356 - T6

CA-2

REV. 0

SCALE:

SHEET OF