1	WARRANTY
2	TESTING DOCUMENTS INSPECTION
3	SAFETY
4	MOROOKA CARRIER
5	HYDRAULICS
6	ELECTRICAL
7	FABRICATED PARTS LIST
8	BOOM GROUP
9	ACCESSORIES
10	TRAILER

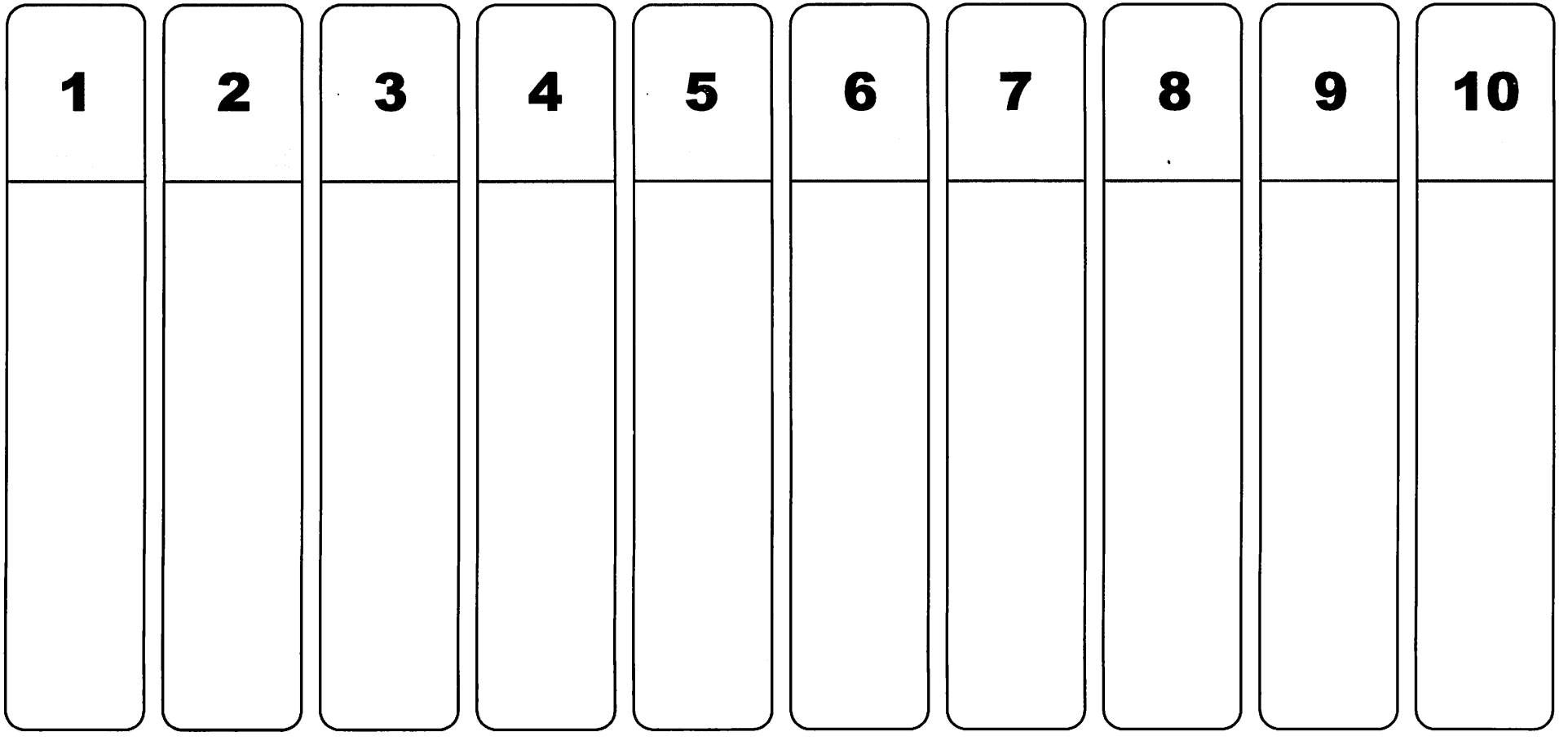
1
2
3
4
5
6
7
8
9
10

SKYLIFT PATRIOT
LOW-PRO 40/50

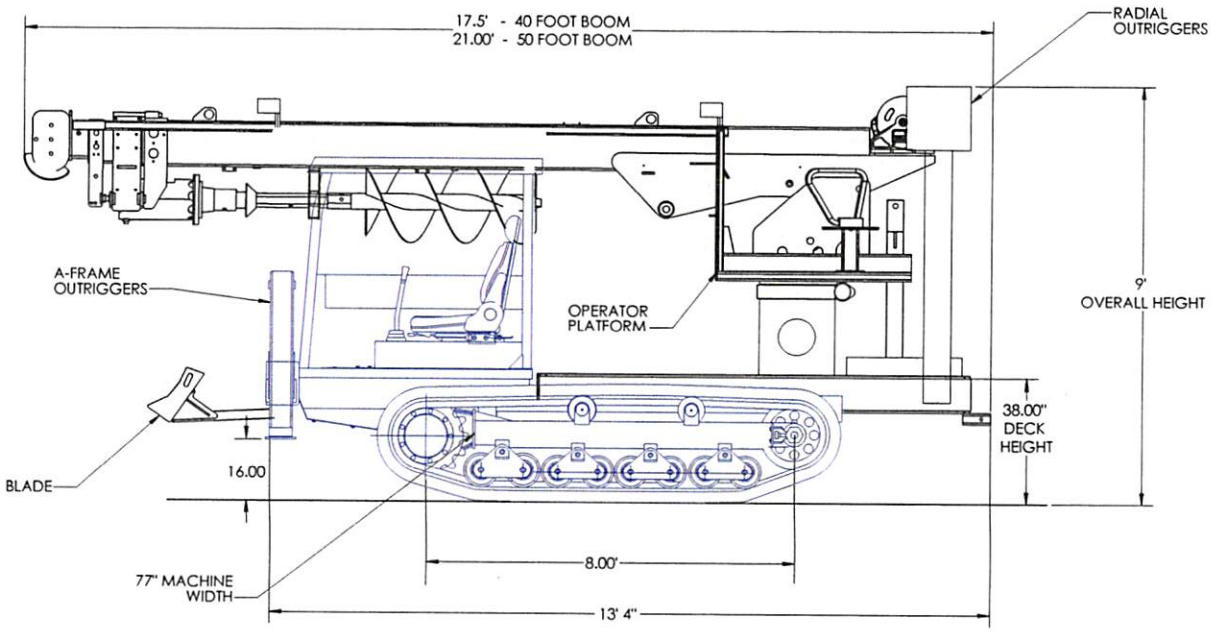

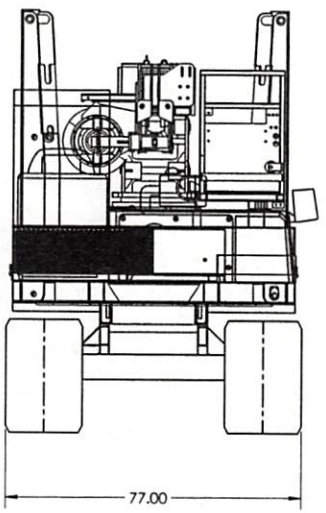

SKYLIFT

SAFETY WARNING

⚠ WARNING ⚠

DO NOT PULL POLES WITH THE DIGGER DERRICK.
THIS MACHINE IS NOT DESIGNED OR BUILT TO PULL POLES FROM THE GROUND.
SEVERE DAMAGE WILL OCCUR!
PULLING POLES WITH THE DERRICK WILL VOID ALL WARRANTY ON THE MACHINE AND THE MACHINE COMPONENTS.

⚠ WARNING ⚠

PATRIOT ★ 50 LOW PRO

OVERHEAD WORK LOAD AREA

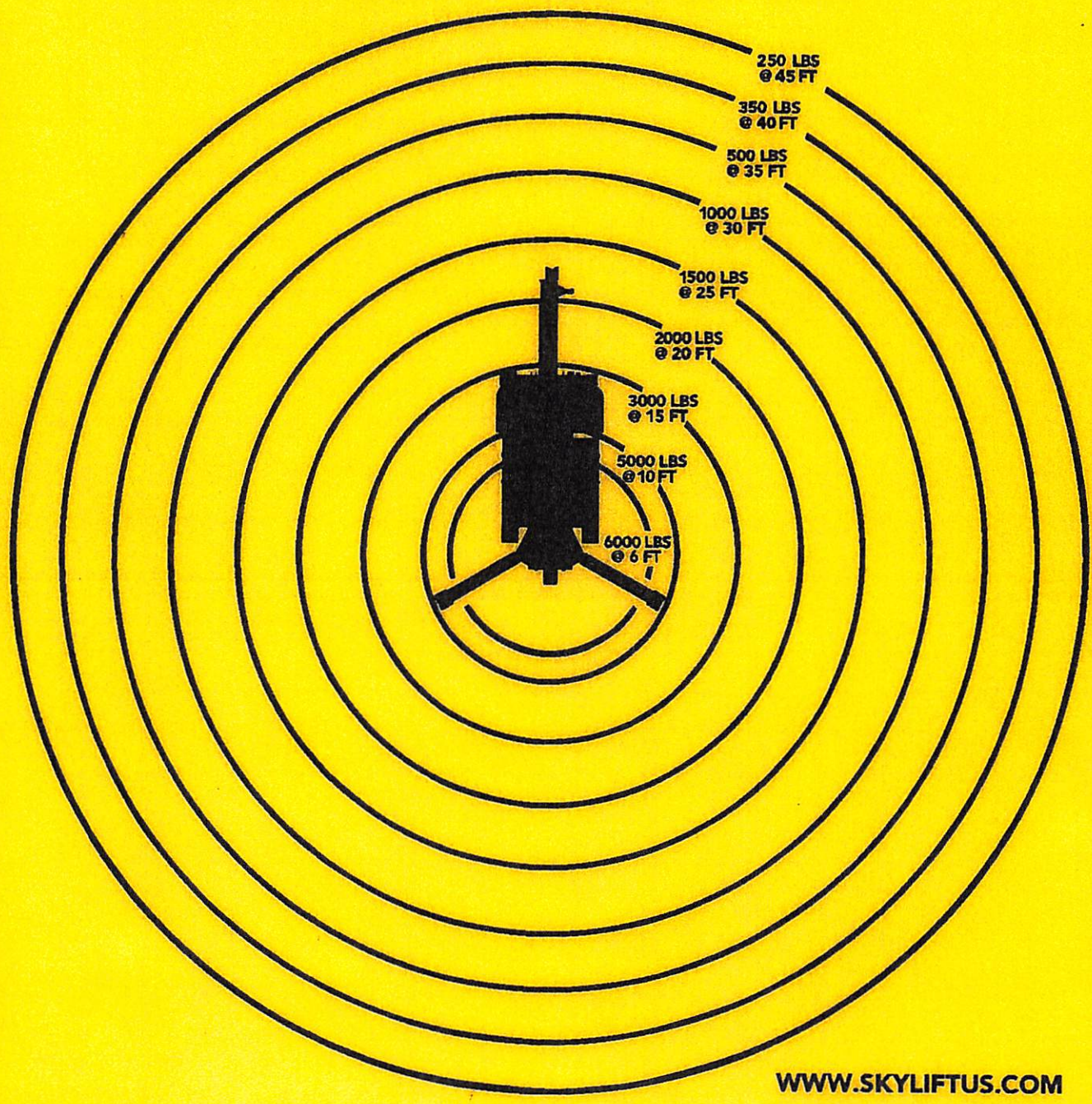

WWW.SKYLIFTUS.COM

PATRIOT 50
CAN HANDLER SAFE WORK ZONE

PATRIOT 50 SAFE WORK LOADS

Full 360° Work Zone

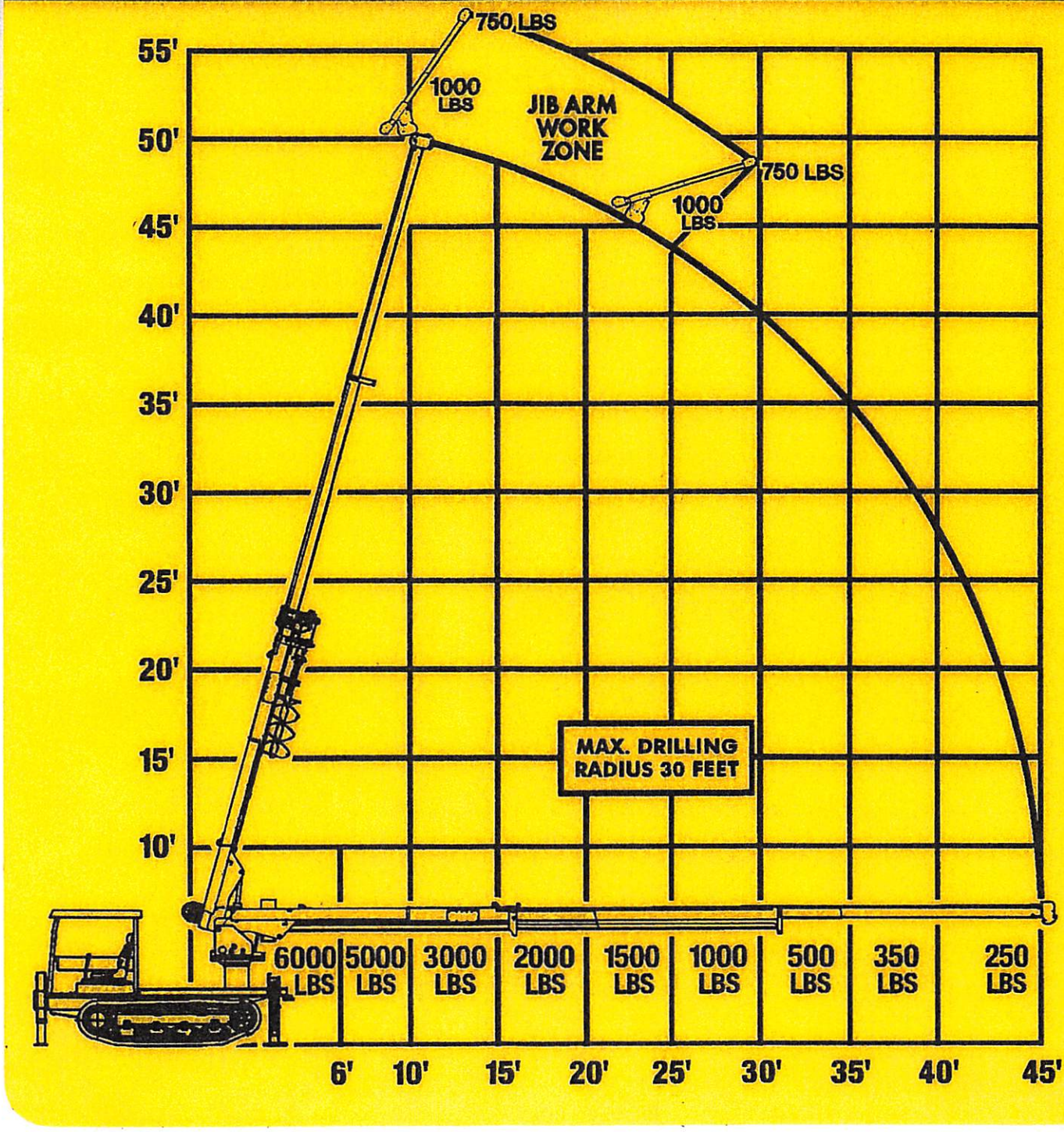

CHAPTER 1

Kubota

KUBOTA ENGINE AMERICA CORPORATION
LIMITED WARRANTY ON INDUSTRIAL ENGINES
AND REPLACEMENT PARTS EFFECTIVE MAY 1, 2009

OUR WARRANTY TO YOU
We warrant to you, the original purchaser, that all parts (except those referred to below) of your new Kubota industrial engine and replacement parts purchased from an Authorized Kubota Industrial Engine Distributor or OEM Distributor in the United States will be free from defects in materials or workmanship during the following periods. (Refer to Service Policy for further details)

1. Industrial Engines for 2 years or 2,000 hours, whichever occurs first.

2. Industrial Engines Major Component Warranty (MCW), 3 years or 3000 hours, whichever occurs first, parts only.

   MCW covers cylinder block, cylinder head, crankshaft, camshaft, gears, pistons, rods, flywheel, flywheel housing, oil pump, pulleys, governor, intake manifold, oil pan, ignition distributor.

   MCW does not cover rings, bearings, water pump, any electrical component, valve train components, accessory parts, seals, gaskets, carburetors, exhaust manifold, hoses, all fuel system components, muffler, any filters, radiator, fan, belts, thermostat, spark plugs, fuel transfer pumps.

3. Replacement parts for 1 year.

WHAT WE WILL DO
We will, at our option, repair or replace any part covered by this warranty which becomes defective, malfunctions or otherwise fails to conform with this warranty under normal use and service during the term of the warranty at no charge for parts or labor. (Parts only for MCW)

WHAT YOU MUST DO TO OBTAIN WARRANTY SERVICE
In order to obtain warranty repairs, you must deliver the product, together with proof of purchase, to an Authorized Kubota Industrial Engine Distributor or Dealer at your expense. The names and addresses of such Authorized Kubota Industrial Engine Distributors can be found on the internet at www.kubotaengine.com, by calling 1-800-532-9808, via email at EEWRI@kubotaengine.com or by contacting:

Kubota Engine America Corporation
505 Schelter Road
Lincolnshire, IL 60069

WHAT THE WARRANTY DOES NOT COVER
This warranty **does not** cover:

1. Damage, malfunctions or failures resulting from accidents, abuse, misuse, modifications, alteration, improper servicing, or lack of performance of required maintenance service.
2. Normal maintenance services or replacement of maintenance items such as light bulbs, preheater plugs, indicator and resistant coils, filter elements, lubricants, oils, spark plugs, coolant, or belts.
3. Installation of replacement parts, unless originally installed by an Authorized Kubota Industrial Engine Distributor or Dealer.
4. Non-genuine Kubota parts.
5. Any engines damaged by use of ether or any starting aid, or greater than a 50/50% solution of antifreeze and water.
6. Injection nozzle wear or any engine damage caused by injection nozzle wear or sticking.
7. Damage caused by water entering the engine due to any cause.
8. Used Products.
9. Any damage caused by overheating that is not a direct result of a defect in materials or workmanship.
10. Any Engine not application reviewed.

APPLICATION REVIEW PROCESS: The Kubota Engine America (KEA) application review process is intended to assist the OEM with engine installation to optimize functionality/performance within the OEM's equipment in order to maintain durability, customer satisfaction, and reduce warranty failures and expenses. Kubota cannot anticipate all potential failures and issues that may occur with the engine or product in the field during an application review. Therefore, machine durability testing by the OEM either in a test facility and/or in the field is critical to further reduce the potential for field failures.

The amount of time spent by KEA on an application review is significantly less than the amount of time spent by the OEM's design engineers on the application. Because of this, the KEA application review is intended to identify issues that are within the scope of the application review testing performed and in some cases recommend possible solutions. The KEA application review should never take the place of proper design and testing of the finished product by the OEM.

The KEA application review does not in any way express or imply any additional warranty coverage other than what is stated in Kubota's Limited Warranty Agreement. Kubota and its subsidiary companies are not responsible for (including, but not limited to): failures resulting from any components that are not manufactured by Kubota, misrepresented or incorrect information provided from an OEM, any changes made without KEA's knowledge, any decision by the OEM not to follow KEA's recommendations, or any application related problems or deficiencies that may arise that were not found by KEA's limited application review or the OEM's durability testing.

THIS IS THE ONLY EXPRESS WARRANTY ON OUR PRODUCTS
We neither assume nor authorize anyone to assume for us any other express warranty. The Kubota Distributor/ Dealer has no authority to make any representation or promise on behalf of Kubota Engine America Corporation or to modify the terms or limitations of this warranty in any way.

LIMITATIONS ON OUR RESPONSIBILITY WITH RESPECT TO PRODUCTS PURCHASED AND USED FOR PERSONAL, FAMILY OR HOUSEHOLD USE.
Our responsibility is to repair or replace defective parts as stated above. We will not be responsible for any other expenses, losses or inconvenience which you may sustain as a result of the purchase, use, malfunction or defective condition of our products. ANY IMPLIED WARRANTIES INCLUDING WARRANTIES OF MERCHANTABILITY AND FITNESS FOR A PARTICULAR PURPOSE SHALL BE LIMITED IN DURATION TO THE PERIOD SET FORTH ABOVE AND IN NO EVENT WILL WE BE LIABLE FOR ANY SPECIAL, INCIDENTAL OR CONSEQUENTIAL DAMAGES WHATSOEVER. Some states do not allow limitations on how long an implied warranty lasts or the exclusion or limitation of incidental or consequential damages, so the above limitations or exclusions may not apply to you. This warranty gives you specific legal rights, and you may have other rights which vary from state to state.

LIMITATIONS ON OUR RESPONSIBILITY WITH RESPECT TO PRODUCTS USED FOR RENTAL OR FOR COMMERCIAL, INDUSTRIAL OR AGRICULTURAL PURPOSES.
This warranty is in lieu of all other warranties, express or implied, and of any other obligations or liability on our part. IMPLIED WARRANTIES OF MERCHANTABILITY AND FITNESS FOR A PARTICULAR PURPOSE ARE EXCLUDED. Our responsibility for any and all losses and damages resulting from any cause whatsoever, including our negligence, alleged damage or defective goods, whether such defects are discoverable or latent, shall be limited to the repair or replacement of defective parts as stated above. IN NO EVENT WILL WE BE LIABLE FOR LOSS OF USE, LOSS OF PROFITS, LOSS OF OR DAMAGE TO OTHER PROPERTY, INCONVENIENCE, COMMERCIAL LOSS, OR OTHER SPECIAL, INCIDENTAL OR CONSEQUENTIAL DAMAGES WHATSOEVER.

MOROOKA CO., LTD.
&
MOROOKA AMERICA, LLC

LIMITED WARRANTY

{Effective November 1, 2013}

Thank you for your patronage! Morooka Co., Ltd. & Morooka America, LLC (Morooka) are the premier manufacturers and distributors of hydrostatic transmission controlled, rubber-tracked carriers ("Morooka Carrier") in the world. As part of our commitment to quality and reliability, Morooka provides to you, at no extra charge, limited warranty coverage for your new Morooka Carrier.

I. Limited Warranty

Morooka warrants the original parts and components of any Morooka Carrier sold by it to be free from defects in material and workmanship. MOROOKA'S SOLE LIABILITY UNDER THIS LIMITED WARRANTY shall be that Morooka, at its option, will repair or replace any part or component that are found to be defective in material or workmanship, with the exception of parts and components identified in **Section IV "Exclusions from Limited Warranty".** An authorized Morooka dealer or representative must perform all warranty work. The repair or replacement will be at no charge for either the part or the labor, (excluding limitations in article # IV), to repair or replace that part during the applicable warranty period.

II. Term of Limited Warranty

The limited warranty on the new Morooka Carrier shall extend for (a) twelve (12) months after the date of delivery to the purchaser from Morooka or an authorized dealer or (b) until the Morooka Carrier's electronic control module ("ECM") exceeds 1000 hours, whichever comes first. The Limited Warranty shall terminate upon the expiration of the limited warranty period.

III. Party Covered By Limited Warranty

This Limited Warranty shall extend to the initial purchase of the Morooka Carrier and any other person or entity to which title to the Morooka Carrier is transferred during the applicable warranty term.

IV. Exclusions from Limited Warranty

The Limited Warranty ***does not*** cover the following parts or components:

1. Caterpillar Engines (including engine block assembly and all internal lubricated parts enclosed therein). Morooka agrees to pass through to purchaser the warranty, if any, originally provided to Morooka by Caterpillar, the original manufacturer of these OEM Parts, subject to the respective terms, conditions, and limitations.
   {Note: Refer to section **I. Limited Warranty** for all engine manufacturers other than Caterpillar.}

2. Any part or component that has been subjected to abuse, misuse, unauthorized modifications or repairs, and neglected maintenance. Please refer to the Operator's Manual included with your equipment for Maintenance Guidelines and procedures.

3. Any part or component damaged in an accident or natural calamity.

4. Any part or component that fails or is damaged from attachments, accessory items, and parts not sold or approved by Morooka.

5. Expendable and wear items that would normally be replaced within the limited warranty period due to normal wear and tear including, but not limited to, filters (air, fuel, oil, hydraulic), brake linings, window glass, light bulbs, belts, etc. Additionally, the Morooka warranty covers workmanship defects but does not warranty wear and tear on undercarriage components including bottom rollers, sprockets, idlers, top carrier rollers, pivot shafts, bushings and rubber tracks.
   Some components (i.e. sprockets, idlers and rollers) are engineered to wear more rapidly to avoid damage to the rubber tracks.

6. The Rubber Tracks are warranted as the case may be:
   a. 0 to 3 months or 0-250 hours, whichever is less:
      100% replacement

b. 3-6 months or 251-500 hours, whichever is less: 75% replacement
c. 6-9 months or 501-750 hours, whichever is less: 50% replacement
d. 9-12 months or 751-1000 hours, whichever is less: 25% replacement

If the equipment has been used extensively on inappropriate terrain, rubber track warranty terms may be modified at the discretion of Morooka Co., Ltd.

Mileage, travel and diagnostic time

- Mileage is limited to 200 miles.
- Travel time is limited to four hours.
- Diagnostic time is limited to four hours.

Additional items not covered under warranty:

- Pickup, towing, or delivery of the Morooka Carrier.
- Rental of replacement equipment during the repair period.
- Products that have been declared a total loss and subsequently salvaged.
- Overtime labor charges.

V. Disclaimer

YOUR MOROOKA LIMITED WARRANTY GIVES YOU SPECIFIC LEGAL RIGHTS. MOROOKA CO., LTD. DOES NOT AUTHORIZE ANY PERSON TO CREATE FOR MOROOKA ANY OBLIGATION OR LIABILITY OTHER THAN THAT STATED IN THE LIMITED WARRANTY.

IMPLIED WARRANTY OF MERCHANTABILITY OR FITNESS FOR A PARTICULAR PURPOSE IS EXPRESSLY LIMITED TO THE TERM OF THE EXPRESS WRITTEN LIMITED WARRANTY. UNDER NO CIRCUMSTANCES SHALL MOROOKA BE LIABLE TO THE PURCHASER OR ANY OTHER PERSON OR ENTITY FOR ANY CONSEQUENTIAL, INCIDENTAL, ECONOMIC, DIRECT, INDIRECT, GENERAL, OR SPECIAL DAMAGES ARISING OUT OF ANY BREACH OF WARRANTY, EXPRESS OR IMPLIED.

MOROOKA MAKES NO WARRANTY FOR OEM PARTS, EITHER EXPRESS OR IMPLIED, INCLUDING WARRANTIES OF MERCHANTABILITY AND FITNESS FOR A PARTICULAR PURPOSE, OR NON-INFRINGEMENT. THE SOLE WARRANTY, IF ANY, SHALL BE THAT OF ITS MANUFACTURER.

IF OTHERWISE APPLICABLE, THE UNITED NATIONS CONVENTION ON CONTRACTS FOR THE INTERNATIONAL SALE OF GOODS IS EXCLUDED IN ITS ENTIRETY.

VI. Purchaser Responsibility

It is the purchaser's responsibility to maintain the Morooka Carrier in accordance with the instructions provided in the Operator's Manual. Morooka recommends that you keep records and receipts; you may be asked to prove that the maintenance instructions have been followed.

It is also your responsibility to operate the equipment in a safe manner, and for the use for which it was designed. If a defect in materials or workmanship occurs, it is your responsibility to cease operating the equipment until repairs are made. Damage, which occurs from continued operation, may not be covered by this warranty. You should contact your authorized Morooka dealer immediately so that repairs can be made in a timely manner.

VII. Procedure for Obtaining Warranty Service

To obtain warranty service under the terms and conditions of the Limited Warranty, you must notify an authorized Morooka dealer of the defect within ten (10) days of discovery, along with proof of purchase, and serial number. In addition, you will need to provide a picture of the serial number plate and one of the hour meter. Any defective parts will need to be held for return to Morooka.

Morooka recommends that you take your equipment to the dealer from whom it was purchased for the warranty repair.

VIII. Right To Make Changes

Morooka reserves the right to make any changes to a Morooka product at any time without incurring any obligation with respect to any product previously ordered, sold, or shipped.

Revised August 8, 2013

Skylift Warranty Department
FAX: (440) 960-2104
susan@skyliftus.com

WARRANTY CLAIM FORM

Skylift, Inc.
3000 Leavitt Rd., Unit 6
Lorain, OH 44052

Today's Date: _____

Claim, Repair, or Work Order No. _____

Skylift Model Type	Unit Serial No.	Trailer Serial No.	Hour Meter Reading

Company Name, Address & Contact Person	Phone No.	Email Address

Detailed Description of Problem(s) and (if known) Cause of Failure

Total Cost of Parts:	
Total Labor Charge:	
Other Charges (explain):	
Sales Tax (if applicable):	
TOTAL of Claim:	

Labor Rate Per Hour	Total Labor Time

Claim, Repair, or Work Order No.
FOR OFFICE USE ONLY BELOW
Notes: _____

Skylift, Inc. Authorization

WARRANTY CLAIMS
will NOT be processed unless there has been prior approval from the factory for the repair work that is to be performed.
Call: (440) 960-2100
After Hours Emergencies Call: (440) 725-2181

SKYLIFT Inc WARRANTY GUIDELINES / INSTRUCTIONS

Warranty procedures MUST be followed in order for a warranty claim to be considered. WARRANTY CLAIMS will NOT be processed unless there has been prior approval from the factory for the repair work that is to be performed.

The service technician that is repairing the Skylift manufactured machinery MUST call Skylift and advise Skylift's service director of the problem they are having with the Skylift equipment prior to any repair work being done. (440) 960-2100

Skylift keeps a very detailed daily log of all service calls/emails that come in from our distributors and their service technicians. The service department records the date the call came in including the time, machine serial number, and info on the person that reported the issue.

When contacting Skylift to report a problem with a Skylift piece of equipment we will ask for the following information to be provided.

- Date issue reported to Skylift _____
- Name of Skylift tech that was spoken to _____
- Owner of the equipment _____
- Location of the equipment _____
- Technician's name _____
- Technician's company name _____
- Technician's phone number _____
- Technician's email address _____
- Equipment model type _____
- Machine serial number _____
- Machine manufactured date _____
  (Refer to the Skylift DATA TAG on the machine)
- Hours on the equipment _____
  (Refer to the HOUR METER located on the machine)

The reported issue will be evaluated by Skylift's service department and Skylift will work with the technician over the phone to determine the problem and advise on the repairs if needed. The Skylift technician will estimate labor hours for the repair as well. Skylift MUST provide the parts for the repair if there are any parts that need to be replaced on the equipment.

1) The customer will need to issue a purchase order for the parts
2) Skylift in most cased will issue a return material authorization for the parts to be returned to Skylift or directly to the supplier for evaluation.
3) After warranty has been approved credits will be given to the customer.
4) Please note that warranty coverage DOES NOT cover travel time to the machine, transport of the machine to a repair facility, routine maintenance, misc. material, fluids nor shop supplies.
5) Warranty claim form to be completed detailing the breakdown of repairs:
   1. Parts
   2. Travel time
   3. Shop Supplies
   4. Misc.
   5. Labor

If a warranty claim is submitted to Skylift does not contain all information requested and documented the claim will not be considered or paid.

*Claim forms can be requested by phone **(440) 960-2100** or emailing susan@skyliftus.com*

Please refer to Limited Warranty document for complete warranty coverage info.

Warranty Registration
Pre-Delivery Inspection Form

IMPORTANT UNIT WARRANTY INFORMATION

Please note that the 12 month warranty period on your new SKYLIFT unit begins at the unit delivery date at your facility.

In order to insure the correct processing of any warranty claim, it is important that this page be filled out and returned to SKYLIFT, INC. at the address given below within ten (10) days of the delivery date of the equipment.

Fill out form and return to:

SKYLIFT, INC.
ATTN: Susan Naso
3000 LEAVITT RD. UNIT 6,
LORAIN, OH 44052
Phone: 440-960-2100
Fax: 440-960-2104

Skylift Model Name: _____

Skylift Serial Number: _____

Company Name: _____

Address: _____

City: _____ State: _____ Zip: _____

Contact Name: _____

Phone Number: _____ Fax Number: _____

Email Address: _____

Date Delivered to Customer: _____

Limited Warranty

On machines manufactured after July 1, 2010

Skylift, Inc. provides a **ONE (1) year** limited warranty on the entire machine.

Skylift, Inc. provides a **TWO (2) year** limited warranty on Skylift manufactured components. *(Parts built and manufactured by Skylift only)*

Products designed and manufactured by Skylift, Incorporated, are warranted to be free from defects in material and workmanship at the time of initial delivery subject to the following provisions:

1. For **one (1) year** following initial delivery of the product, Skylift will, at its option, repair or replace any part found by Skylift to be defective in material or workmanship. The customer is obligated to contact Skylift, Inc. prior to any work being performed on equipment. A completed Skylift Warranty Claim Form is required within thirty (30) days of the date of failure of any warranted part. Skylift will inspect defective parts for approval prior to issuing credit to the customer. Defective parts shall be shipped to the factory pre-paid motor freight or UPS within 30 days of failure of any warranted part is factory requests return of said parts.

2. The Skylift limited warranty does not cover: (a) products which have not been operated and maintained in accordance with Skylift operators and maintenance schedules, programs, or bulletins; (b) products which have not been mounted in accordance with Skylift installation procedures; (c) products not manufactured by Skylift which are supplied by Skylift (d) products which are repaired without using original Skylift parts; or (e) transportation or delivery to a Skylift service facility or the customer's location.

3. The battery, generator, hydraulic components, electrical components, drive motors, and or other parts/equipment, but not limited to, not manufactured by Skylift is subject to warranty guidelines set forth by the respective manufacturers and their allowed warranty period. Such warranties shall be handled direct through the respective manufacturer or one of its distributors.

This warranty is in lieu of any other warranties, express or implied. There is no warranty of merchantability or fitness for a particular purpose, nor is there any other warranty, express or implied, except as specifically stated herein. No associate, agent or representative of Skylift is authorized to extend any warranty on Skylift's behalf. Skylift shall in no event be liable for any special, indirect, or consequential damages or claims of any third party against the Customer.

WARRANTY CLAIMS will NOT be processed unless there has been prior approval from the factory for the repair work that is to be performed. (This excludes travel time and or mileage which is NOT allowed or covered under the Skylift Limited Warranty.) NO EXCEPTIONS will be made.

CHAPTER 2

PATRIOT LUBRICATION SCHEDULE

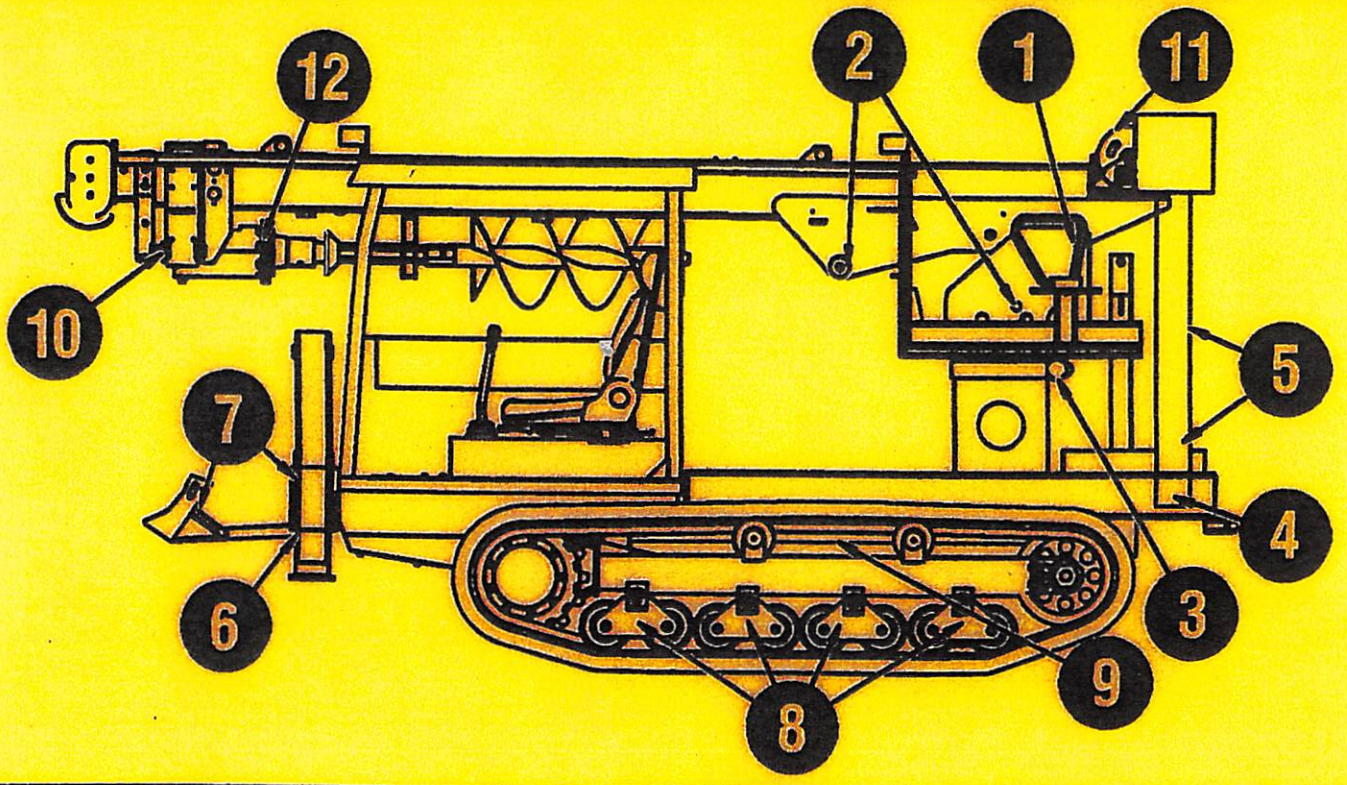

No.	ITEM	No.	ITEM	FREQUENCY	LUBRICANT
1	MAIN BOOM PIVOT	7	BLADE CYLINDERS	WEEKLY	LITHIUM BASED EXTREME PRESSURE GREASE GRADE 2
2	LIFT CYLINDER	8	TRACK BOGEYS		
3	ROTATION GEAR	9	TRACK TENSIONER		
4	RADIAL OUTRIGGER MAIN PIVOT	10	AUGER SWING PIN		
5	RADIAL OUTRIGGER CYLINDERS	11	*WINCH GEAR OIL		*90W
6	BLADE PIVOT	12	*AUGER GEAR OIL		

MACHINE INSPECTION CHART

ITEM	DESCRIPTION	SERVICE	DAILY	WEEKLY	3 MOS	6 MOS	1 YR
1	HYDRAULIC FLUID	CHECK LEVEL	X				
		DRAIN FLUID AND REPLACE WITH MOBIL DTE 11 OR ATF (WHERE APPLICABLE)					X
2	ENGINE OIL	CHECK LEVEL	X				
		CHANGE OIL (SEE ENGINE MANUAL)					
3	LOAD HOOK	INSPECT HOOK & LATCH	X				
4	WINCH LINE	INSPECT FOR WEAR AND BROKEN STRANDS	X				
5	WINCH DRUM	CABLE IS WOUND EVENLY ON DRUM	X				
6	AUGER STRAP	INSPECT FOR WEAR AND BROKEN STRANDS	X				
7	ALL PIN RETAINERS	MAKE SURE PIN RETAINERS ARE IN PLACE AND TIGHTLY BOLTED	X				
8	TIE DOWN HOOKS	MAKE SURE BOLTS ARE TIGHT	X				
9	ROTATION BEARING BOLTS	MAKE SURE BOLTS ARE TIGHT TORQUE TO 159 FT.LB.			X		
10	LIFT CYLINDER GREASE FITTING	GREASE WITH MOBIL HP GREASE			X		
11	ROTATION BOX GREASE FITTING	GREASE WITH MOBIL HP GREASE			X		
12	ROTATION GEAR TEETH	GREASE WITH MOBIL HP GREASE			X		
13	NYLON SHEAVES	CHECK FOR SHARP EDGES, CUTS		X			
14	WEAR PADS	CHECK FOR WORN, LOOSE, OR MISSING PADS		X			
15	FIBERGLASS EXTENSION BOOM	CHECK FOR CRACKS, CHIPS, DIRT BUILDUP. DO NOT GREASE OR LUBE FIBERGLASS BOOM. CLEAN WITH SOLVENT.		X			
16	WINCH GEARBOX	REPLACE LUBE WITH EPSAE 90				X	
17	AUGER GEARBOX	REPLACE LUBE WITH EPSAE 90				X	
18	HYDRAULIC RETURN FILTER	REPLACE				X	
19	OUTRIGGER PIN GREASE FITTINGS	GREASE ADEQUATELY (4 PLCS.)		X			
20	HYDRAULIC HOSES/FITTINGS	CHECK FOR LEAKS/ CRACKS. REPAIR LEAKS IMMEDIATELY.	X				

TRAILER INSPECTION CHECK LIST

There are a number of simple rules to follow in caring for your trailer axle assembly that can add to its life – and in the case of some of these rules, you may be protecting your own life as well. Using the following checklist before starting a trip with your trailer is highly recommended. Some of these items should be checked 2-3 weeks prior to planned trip to allow sufficient time to perform maintenance.

1. Check your maintenance schedule and be sure you are up-to-date.
2. Check hitch. Is it showing wear? Is it properly lubricated?
3. Fasten safety chains and breakaway switch actuating chain securely. Make certain the breakaway battery is fully charged.
4. Inspect towing hookup for secure attachment.
5. Load your trailer so that approximately 10% of the trailers total weight is on the hitch. For light trailers this should be increased to 15%.
6. *Do Not Overload.* Stay within your gross vehicle rated capacity. (Consult your trailer identification plate.)
7. Inflate tires according to manufacturer's specifications; inspect tires for cuts, excessive wear, etc.
8. Check wheel mounting nuts/bolts with a torque wrench. Torque, in proper sequence, to the levels specified in the trailer owner's manual.
9. Make certain brakes are synchronized and functioning properly.
10. Check tightness of hanger bolt, shackle bolt, and U-bolts nuts per torque values specified in trailer owner's manual.
11. Check operation of all lights.
12. Check that your trailer is towing in a level position and adjust hitch height if required.

CHAPTER 3

SAFETY

IMPORTANT NOTICE

WINCH ROPE

MAINTENANCE, INSPECTION AND REPLACEMENT GUIDELINES

WINCH ROPE

MAINTENANCE, INSPECTION AND, REPLACEMENT GUIDELINES

Continued

Since there are numerous uses for our products, it is impossible to cover all application factors. For a rope manufacturer to give blanket working load recommendation would be like a car manufacturer giving the "safe driving speed" of their car. However, if any of the following adverse conditions exist, we suggest that you use the high end of the safety factor:

- Smaller sized ropes are used (damage occurs more quickly by cuts, abrasion, and sunlight).
- The maximum Loading is not known.
- Dynamic loading is likely to occur.
- The rope is subject to rapid cyclic loading.
- Operators are poorly trained in rope handling
- Rope is not inspected on a regular basis.
- Rope may be exposed to harmful chemicals.
- Rope is used at elevated temperatures or have long term exposure to high temperatures
- Rope is has long term exposure to direct sunlight
- Knots are used in the rope
- Rope will be bent around small radius corners or pulleys.
- Death, injury, or loss of valuable property may result from failure

Rope Inspection

A regular inspection cycle should be established to determine the condition of the rope..

The following conditions should be looked for:

- Kinks or twists
- Heavy chafing or seriously worn surface areas
- Cut, broken or frayed strands (outer and inner strands)
- Surface fusion or melted strands
- Evidence of Chemical exposure
- Compacted or hard areas of rope
- Splice movement

Although visual inspection of your rope can not accurately predict the residual strength, it does indicate problem areas that may need attention. If any of the above conditions exist or you doubt the strength of the rope, an analysis of the safety factor ratio should be conducted.

Rope Replacement

For a quote on a replacement of your winch rope,

please call Skylift, Inc at: (440) 960-2100

or email a request to: Susan@skyliftus.com

Utility/Industrial Rope Constructions

Dia.	Circ.	Plasma 12 Strand Minimum Strength Lbs.	Plasma 12 Strand Weight Lbs. Per 100 ft.	Spectra 12 Strand Minimum Strength Lbs.	Spectra 12 Strand Weight Lbs. Per 100 ft.	Vectran 12 Strand Minimum Strength Lbs.	Vectran 12 Strand Weight Lbs. Per 100 ft.	D/S Composite Minimum Strength Lbs.	D/S Composite Weight Lbs. Per 100 ft.	D/T Composite Minimum Strength Lbs.	D/T Composite Weight Lbs. Per 100 ft.	Polyester Double Braid Minimum Strength Lbs.	Polyester Double Braid Weight Lbs. Per 100 ft.	Polyester 12 Strand Minimum Strength Lbs.	Polyester 12 Strand Weight Lbs. Per 100 ft.
3/8"	1-1/8"	17,500	3.7	13,900	3.7	17,500	5.3	8,300	4.1	12,450	4.6	4,800	4.8	6,100	4.2
7/16"	1-1/4"	21,000	4.2	14,800	4.2	21,000	6.1	9,900	6.1	14,850	6.8	6,300	6.3	9,000	6.3
1/2"	1-1/2"	31,300	6.4	22,500	6.4	31,300	9.2	13,950	8.3	20,925	9.3	8,400	8.6	10,900	8.5
9/16"	1-3/4"	37,900	7.9	27,700	7.9	37,900	11.4	18,800	10.1	28,200	11.3	10,750	11.1	13,600	10.1
5/8"	2"	51,400	10.6	36,600	10.6	51,400	15.3	24,600	12.5	36,900	14.0	12,300	13.1	17,500	13.1
3/4"	2-1/4"	68,500	13.3	43,200	13.3	68,500	19.2	31,500	15.9	47,250	17.8	17,400	18.8	21,900	17.2
7/8"	2-3/4"	92,600	19.6	61,000	19.6	92,600	28.3	44,800	24.9	67,200	27.9	24,000	25.6	28,500	25.8
1"	3"	110,000	23.4	72,000	23.4	110,000	33.8	51,600	30.8	77,400	34.5	31,200	33.5	41,000	34.5
1-1/8"	3-1/2"	147,000	31.9	91,800	31.9	147,000	46.0	65,500	36.8	98,250	41.2	39,500	42.4	47,500	40.0
1-1/4"	3-3/4"	165,000	36.2	102,600	36.2	165,000	52.2	72,700	42.6	109,050	47.7	48,100	52.3	56,700	44.5
1-5/16"	4"	196,000	41.7	114,300	41.7	196,000	60.2	79,500	49.7	119,250	55.7	53,100	57.8	59,800	53.1
1-1/2"	4-1/2"	221,000	51.7	141,300	51.7	221,000	74.6	100,000	64.0	150,000	71.7	64,300	75.4	69,800	69.0
1-5/8"	5"	291,000	65.7	167,400	65.7	291,000	94.8	120,000	76.0	180,000	85.1	77,800	88.2	83,000	82.5
1-3/4"	5-1/2"	314,000	78.4	198,000	78.4	314,000	113.2	139,000	89.8	208,500	100.6	89,200	103.0	98,000	96.1
2"	6"	355,000	91.4	225,000	91.4	355,000	132.0	165,000	107.0	247,500	119.8	110,000	134.0	120,000	117.0

NOTE: Tensile strengths are determined in accordance with Cordage Institute Standard 1500-Test Methods for Fiber Rope. All strengths are obtained by testing rope with standard eye splices. Certificates of Compliance are supplied at no charge if requested when placing an order.

Plasma® 12 Strand is the highest strength synthetic rope available. Plasma® 12 Strand is manufactured from Honeywell Spectra® fiber that has been enhanced by Puget Sound Rope's patented recrystallization process. This process is especially effective in medium to large diameter ropes where strengths are over 50% higher and creep is significantly less than that of standard Spectra® 12 Strand. Plasma® 12 Strand comes standard with a polyurethane finish and is easily spliced using a simple tuck splice procedure. Its soft torque-free braided construction provides easy handling.

Spectra® 12 Strand provides very high strength, low stretch and excellent abrasion resistance in a single braid construction. Spectra® 12 Strand is over 3 times as strong and less than 1/2 of the elongation of a polyester rope of the same weight. Spectra® 12 Strand comes standard with a polyurethane finish and is easily spliced using a simple tuck splice procedure. Its soft, torque-free braided construction provides easy handling.

Vectran® 12 Strand is a high strength, low elongating heat-resistant single braided rope construction. It comes standard with either a wax marine finish or a polyurethane coating. Vectran® 12 Strand has excellent bend and flex fatigue resistance and has virtually no creep under sustained loads. It is easily spliced using a tuck splice procedure. Its soft, torque-free braided construction provides easy handling.

D/S Composite is a double braided rope with the inner core made of Spectra® and the outer sleeve of polyester. D/S Composite has very low elongation, high strength and the feel and handling of polyester and double braid. D/S Composite comes standard with an overlay finish and is available on special order with a spliceable polyurethane finish in clear or any of six colors.

D/T Composite is a double braided rope with the inner core made of Plasma® and Vectran® and the outer sleeve of polyester. D/T Composite is the highest strength double braid construction available and is intended for use in applications requiring high strength, low stretch and superior external abrasion protection. D/T Composite comes standard with an overlay finish and is available on special order with a spliceable polyurethane finish in clear or any of six colors.

Polyester Double Braid provides an excellent combination of high strength, low stretch, excellent weathering and easy handling. Of all the popular fibers polyester has the best weathering characteristics and the best wet abrasion resistance. Polyester Double Braid comes standard with an overlay marine finish and is available on special order with a spliceable polyurethane finish in clear or any of six colors.

Polyester 12 Strand has the lowest stretch and highest strength of all polyester constructions. Its torque-free braided construction provides easy handling and prevents kinks and hockles. Polyester 12 Strand comes standard with a clear polyurethane finish and is easily spliced using a simple lockstitch type splice.

Puget Sound ROPE

1012 Second Street, Anacortes, WA 98221-1956
Telephone 360.293.8488
Fax 360.293.8480
www.psrope.com

ABS Quality Evaluations, Inc. Management System Certification

ISO 9001

PATRIOT 50
CAN HANDLER SAFE WORK ZONE

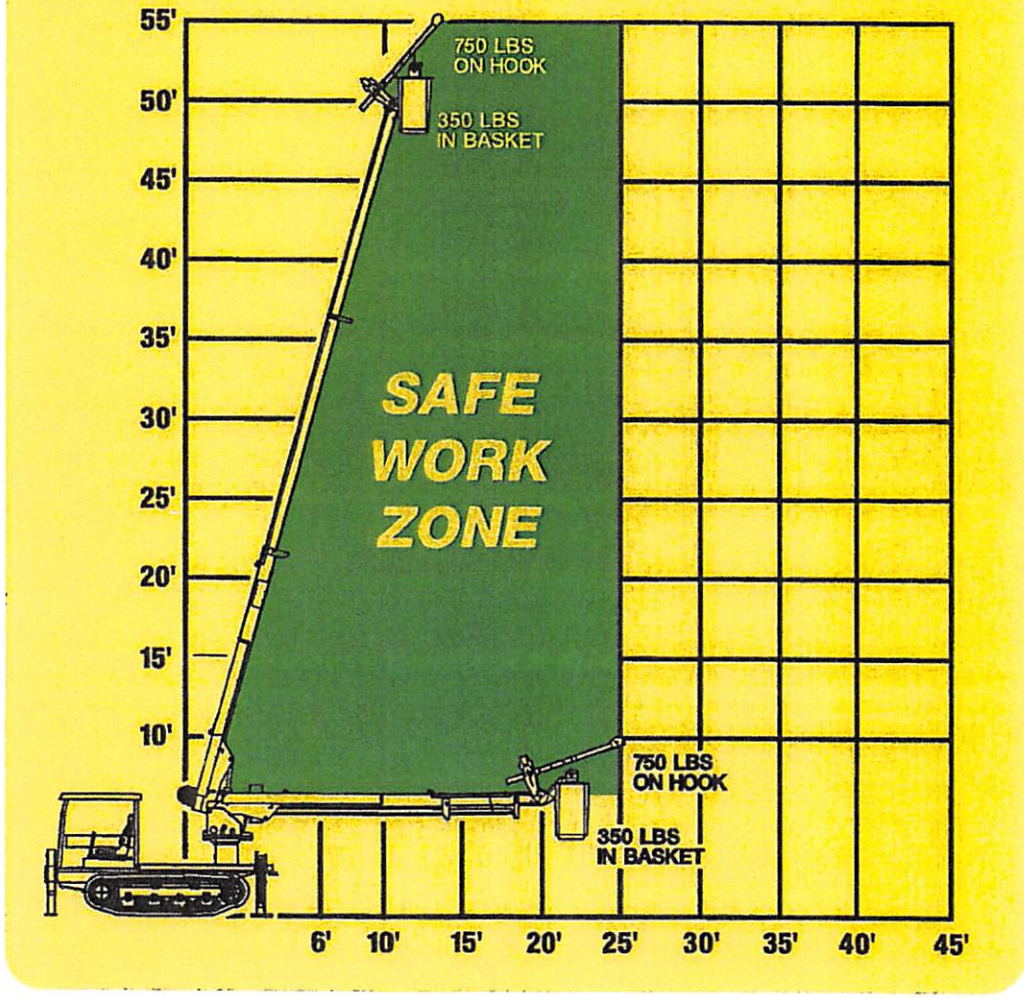

CHAPTER 4

AE10600VD3-01

Operation & Maintenance Manual

RUBBER CRAWLER CARRIER

MST-600VD

Serial No. 60501 and up

⚠ WARNING

Unsafe use of this machine may cause serious injury or death. Operators and maintenance personnel must read this manual before operating or maintaining this machine. This manual should be kept near the machine for reference and periodically reviewed by all personnel will come into contact with it.

MOROOKA

MOROOKA CO., LTD.

CONTENTS

ITEM	Page
FOREWORD	0- 1
1. Foreword	0- 2
2. Introduction	0- 3
3. Safety information	0- 4
4. Location of serial number	0- 5
SAFETY	1- 1
1. General precautions	1- 2
2. Precautions during inspection and maintenance	1- 4
3. Precautions before starting engine	1- 9
4. Precautions when starting engine	1-11
5. Precautions when traveling	1-12
6. Precautions for operation	1-15
7. Precautions for transportation	1-17
8. Position for attaching safety labels	1-18
OPERATION	2- 1
1. General view	2- 2
1.1 General view of machine	2- 2
1.2 General view of operator's compartment	2- 3
1.3 General view of control panel box	2- 4
1.4 General view of monitor panel	2- 4
2. Explanation of components	2- 5
2.1 Meters and lamps on control panel box	2- 5
2.2 Meters and lamps on monitor panel	2- 7
2.3 Switches and levers on control panel box	2-10
2.4 Warning devices	2-12
2.5 Travel lever	2-13
2.6 Dump control lever	2-14
2.7 Dump body safety bar	2-14
2.8 Fuse box in control panel box	2-15
2.9 Fuses inside wiring harness at battery	2-16
2.10 Operator' seat	2-17
2.11 Seat belt	2-18
2.12 Engine bonnet	2-19
2.13 Engine upper and rear cover	2-19
2.14 Undercover	2-19
3. Operation	2-20
3.1 Check before starting engine	2-20
3.2 Operations and checks before starting engine	2-23
3.3 Starting engine	2-24
3.4 Moving machine off	2-27
3.5 Shifting speed range, changing between FORWARD and REVERSE	2-28

ITEM	Page
3.6 Steering machine	2-30
3.7 Stopping machine	2-31
3.8 Emergency stopping machine	2-31
3.9 Parking machine	2-32
3.10 Stopping engine	2-32
3.11 Checks after stopping engine	2-33
3.12 Locking	2-33
3.13 Precautions when traveling	2-34
4. Handling dump body	2-35
4.1 Dumping operation of dump body	2-35
4.2 Locking dump control lever	2-35
4.3 Operating safety bar	2-36
4.4 Precautions during operation	2-37
5. Handling rubber crawler	2-38
5.1 Features of rubber crawler	2-38
5.2 Prohibited operations for rubber crawler	2-38
5.3 Precautions when using rubber crawler	2-39
6. Transportation	2-40
6.1 Loading, unloading work	2-40
6.2 Precautions for loading	2-40
6.3 Precautions for transportation	2-40
7. Cold weather operation	2-41
7.1 Precautions for low temperature	2-41
7.2 After completion of work	2-42
7.3 After cold weather	2-42
8. Long-term storage	2-43
8.1 Before storage	2-43
8.2 Precautions during storage	2-43
8.3 Precautions after storage	2-43
9. Handling battery	2-44
9.1 Precautions when handling battery	2-44
9.2 Removal and installation of battery	2-45
9.3 Precautions when charging battery	2-45
9.4 Starting engine with booster cable	2-46
10. Troubleshooting	2-47
10.1 Problems with engine related parts	2-47
10.2 Problems with chassis related parts	2-48
10.3 Problems with electric related parts	2-49

ITEM	Page
MAINTENANCE	3- 1
1. Basic outline of maintenance	3- 2
2. Precautions for maintenance	3- 4
3. Use of fuel and lubricants according to ambient temperature	3- 6
3.1 Fuel, coolant, and lubricant table	3- 6
4. Tools and tightening torques	3- 8
4.1 Introduction of necessary tools	3- 8
4.2 Torque list for bolts and nuts	3- 9
5. Periodic replacement of critical parts	3-10
5.1 Periodic replacement interval (every 2 years)	3-10
5.2 Periodic inspection	3-10
5.3 Specified periodic replacement parts	3-11
6. Maintenance schedule chart	3-12
7. Service procedure	3-13
7.1 Outline of inspection and maintenance procedures	3-13
7.2 Initial 50 hours service	3-13
7.3 Initial 100 hours service	3-13
7.4 Initial 500 hours service	3-13
7.5 When required	3-14
7.6 Check before starting	3-22
7.7 Every 50 hours service	3-27
7.8 Every 100 hours service	3-29
7.9 Every 250 hours service	3-30
7.10 Every 500 hours service	3-31
7.11 Every 1500 hours service	3-37
SPECIFICATIONS	4- 1
1. Dimension drawing	4- 2
2. Specifications table	4- 3

FOREWORD

1. FOREWORD	0- 2
2. INTRODUCTION	0- 3
3. SAFETY INFORMATION	0- 4
4. LOCATION OF SERIAL NUMBER	0- 5

1. FOREWORD

Thank you for purchasing this Morooka Rubber Crawler Carrier.
This manual describes procedures for operation, handling, testing, and maintenance. It will help the operator realize many years of faithful service from the machine.
Please read this manual carefully BEFORE operating the machine. This will enable you to realize the peak performance of the machine.
For details of handling the engine, please see the separate engine operation manual for any item not given in this manual.

⚠ WARNING

- **Improper operation and maintenance of this machine can be hazardous and could result in serious injury or death.**
- **Operators and maintenance personnel should read this manual thoroughly before beginning operation or maintenance.**
  Always keep this manual on the machine and be sure to read and understand it thoroughly before performing operation and maintenance.
- **Some actions involved in operation and maintenance of the machine can cause a serious accident if they are not done in the manner described in this manual.**
- **Keep this manual handy and have all personnel read it periodically.**
- **If this manual has been lost or has become dirty and cannot be read, request a replacement manual from Morooka or your Morooka distributor.**
- **If you lend this machine to another person, always have that person read the operation manual and make sure that they understand the content of the manual before starting operation.Be particularly careful to ensure that they follow the safety regulations when operating.**
- **Continuing improvements in the design of this machine can lead to changes in detail which may not be reflected in this manual. Consult Morooka or your Morooka distributor for the latest available information of your machine or for questions regarding information in this manual.**
- **The description of safety is given in SAFETY INFORMATION on page 0-3 and in SAFETY from page 1-1.**

2. INTRODUCTION

1. FEATURES OF THE MACHINE

- Low-ground-pressure rubber crawler type that can travel easily on uneven ground, soft ground, or snow.
- Long, wide rubber crawler to provide powerful and stable drawbar pull.
- Hydraulic drive (HST) to allow travel operations to be carried out with a single lever to give forward and reverse with stepless gear shifting, as well as turning and stopping.

2. BREAKING IN THE MACHINE

Your Morooka machine has been thoroughly adjusted and tested before shipment.
However, operating the machine under severe conditions at the beginning can adversely affect the performance and shorten the machine life.
Be sure to break in the machine for the initial 100 hours (as indicated by the hourmeter). Proper breaking in will allow the machine to give you many years of service.
During breaking in, pay particular attention to the following points.

- After starting the engine, idle it for 5 minutes to carry out the warming-up operation.
- Avoid operation with heavy loads or at high speeds.
- Avoid sudden starts, sudden acceleration, sudden steering and sudden stops except in cases of emergency.

3. WARRANTY

If any failure that is considered to be the responsibility of Morooka should occur within 6 months of delivery of the new machine or within 600 hours on the hourmeter, whichever comes sooner, repairs will be carried out free of charge in accordance with the warranty.

3. SAFETY INFORMATION

Most accidents are caused by the failure to follow fundamental safety rules for the operation and maintenance of machines.
To avoid accidents, read, understand and follow all precautions and warnings in this manual and on the machine before performing operation and maintenance.
Do not operate or carry out maintenance of this machine unless you are sure that you understand the explanations and procedures completely.
To identify safety messages in this manual and on machine labels, the following signal words are used.

⚠ DANGER

This word is used on safety messages and safety labels where there is a high probability of serious injury or death if the hazard is not avoided. These safety messages or labels usually describe precautions that must be taken to avoid the hazard. Failure to avoid this hazard may also result in serious damage to the machine.

⚠ WARNING

This word is used on safety messages and safety labels where there is a potentially dangerous situation which could result in serious injury or death if the hazard is not avoided. These safety messages or labels usually describe precautions that must be taken to avoid the hazard. Failure to avoid this hazard may also result in serious damage to the machine

⚠ CAUTION

This word is used on safety messages and safety labels for hazards which could result in minor or moderate injury if the hazard is not avoided. This word might also be word for hazards where the only result could be damage to the machine.

NOTICE

This word is used for precautions that must be taken to avoid actions which could shorten the life of the machine.

Safety precautions are described in SAFETY from page 1-1.
Morooka cannot predict every circumstance that might involve a potential hazard in operation and maintenance.
Therefore the safety messages in this manual and on the machine may not include all possible safety precautions. If any procedures or actions not specifically recommended or allowed in this manual are used, it is your responsibility to be sure that you and others can do such procedures and actions safely and without damaging the machine. If you are unsure about the safety of some procedures, contact your Morooka distributor.

4. LOCATION OF SERIAL NUMBER

On this machine, there is plate with the machine serial number stamped on it stuck to the right side surface of the control panel box inside the operator's compartment in the position in the diagram on the right.

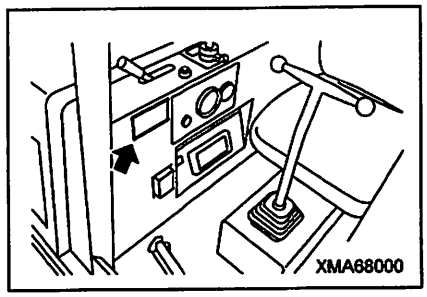

When inquiring about service or ordering parts, please quote the machine serial number, engine serial number, and hour-meter reading.

SAFETY

1. General precautions	1-2
2. Precautions during inspection and maintenance	1-4
3. Precautions before starting engine	1-9
4. Precautions when starting engine	1-11
5. Precautions when traveling	1-12
6. Precautions during operation	1-15
7. Precautions for transportation	1-17
8. Position for attaching safety labels	1-18

⚠ WARNING

Read and follow all safety precautions. Failure to do so may result in serious injury or death.

This safety section also contains precautions for optional equipment and attachments.

1. GENERAL PRECAUTIONS

SAFETY RULES

- Only trained and qualified personnel, or personnel authorized by the company (or superior) can operate and maintain the machine.
- Follow all safety rules, prohibitions, precautions, procedures, and instructions when operating or performing maintenance on the machine, and pay careful attention to safety.
- Operating the machine when you are not in good physical condition reduces the power of judgment needed to avoid danger and leads to accidents.

  People in the following conditions should not operate the machine.
  - People who cannot operate normally because they are tired, ill, or suffering from the effects of medication.
  - People who have been drinking.
  - Pregnant women

XMA00030

SAFETY FEATURES

- Be sure that all guards and covers are in their proper position. Have guards and covers repaired if damaged.
- Use safety features such as safety lock levers and seat belts properly.
- Improper use of safety features could result in serious bodily injury or death.

  ★ Parking brake switch : See "OPERATION 3.9 PARKING MACHINE".

  ★ Dump control lever lock : See "OPERATION 4.2 LOOCKING DUMP CONTROL LEVER".

  ★ Seat belt : See "OPERATION 2.11 SEAT BELT".

WEAR SUITABLE CLOTHING

- Always wear properly fitting clothes which allow ease of movement. If there are buttons, always button the cuffs.
- Avoid loose clothing, towels, jewelry, and loose long hair. They can catch on controls or in moving parts and cause serious injury or death.
- Also, do not wear oily clothes, they can easily catch fire.
- Wear a hard hat, safety glasses, non-slip safety shoes, and gloves when operating or maintaining the machine.

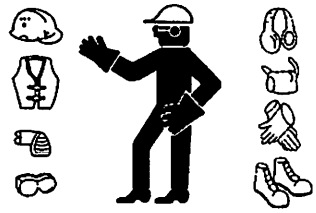

A0055010

FIRE EXTINGUISHER AND FIRST AID KIT

- Be sure that fire extinguishers have been provided and read the labels to ensure that you know how to use them.
- Provide a first aid kit at the storage point.
- Know what to do in the event of a fire.
- Be sure that you know the phone numbers of persons you should contact in case of an emergency.

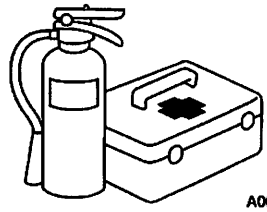

A0055070

UNAUTHORIZED MODIFICATION

- Any modification made without authorization from Morooka can adversely affect the performance of the machine, and may also create hazards.
- Before making a modification, consult your Morooka distributor. Morooka will not be responsible for any injury or damage caused by any unauthorized modification.

FIRE PREVENTION FOR FUEL, OIL, AND ANTIFREEZE

Fuel, oil, and antifreeze can be ignited by a flame. Fuel is particularly flammable and can be hazardous.

- Use well-ventilated areas for adding or storing oil and fuel.
- Keep oil and fuel in the determined place and do not allow un authorized persons to enter.
- Tighten all fuel and oil caps securely.
- Keep any flame away from flammable fluids.
- Do not leave any cloths or rags soaked in oil or fuel lying in the fuel or oil storage area. Clean such materials up immediately.
- Stop the engine and do not bring lighted cigarettes or cigarette lighters close when refueling.

A0055020

A0055030

A0055040

USE HANDRAILS AND STEPS FOR GET ON OR OFF

Get on or off the machine as follows.

- Never jump on or off the machine. Never get on or off a moving machine.
- When getting on or off the machine, always face the machine and use the handrails and steps.
- If there is any oil, grease, or mud on the handrails or steps, wipe it off immediately. Always keep these parts clean.

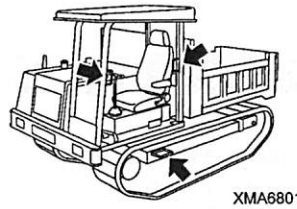

XMA68010

2. PRECAUTIONS DURING INSPECTION AND MAINTENANCE

NO UNAUTHORIZED PERSONS

Never allow unauthorized persons into the area when carrying out inspection and maintenance.
When leaving the operator's seat to carry out operations, hang a "DO NOT OPERATE ! " sign (Part No.: 1-41010-1210) on the control lever to prevent any other person from operating the machine.

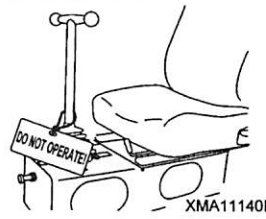

XMA11140E

USE SUITABLE TOOLS

Always use tools that are designed for the purpose. Do not use broken or deteriorated tools, or tools that are designed for other purposes.

A0055120

STOP ENGINE WHEN INSPECTION AND MAINTENANCE

When carrying out inspection and maintenance, always follow the precautions below.
- Select firm, level ground to park the machine.
- Lower the dump body, apply the parking brake, then stop the engine.
- Check that the travel lever is at the N position.
- If the engine must be started to carry out inspection or maintenance, take steps to ensure that the engine can be stopped at any moment.
- When carrying out the operation with two or more workers, determine the order of operation and fix signals, and follow the instructions of the person in charge.

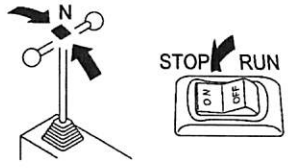

XMA68060E

ALWAYS KEEP MACHINE CLEAN

Always do the following to keep the machine clean.
- Always keep the floor, steps, and handrails free of oil, grease, mud, or water. There is danger that you may slip and be injured.
  Always wipe off any oil, grease, mud or water.
- Do not leave tools or parts lying around on the floor or steps. There is danger that you may trip over them. Always clear up tools and parts immediately.
- Dry wood chips, leaves, grass, paper, oil, and other flammable materials around the engine, muffler, battery, or hydraulic tank may cause fire. Always remove any flammable objects and wipe off any oil.
- Always remove any mud accumulated around the undercarriage.
  There is danger that you may slip and fall when stepping on to the rubber crawler.

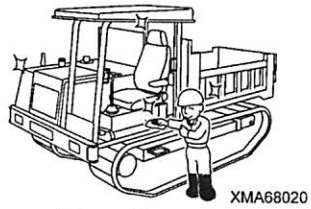
XMA68020

A0055020

VENTILATION FOR ENCLOSED AREAS

Exhaust fumes from the engine can kill.
- If it is necessary to start the engine within an enclosed area, open the doors and windows to provide adequate ventilation.

A0055060

KEEP AWAY FROM ROTATING AND MOVING PARTS

- Do not go close to the fan when it is rotating. Do not bring anything that can be caught up in the fan close to the fan.
- Do not come close to the dump body when it is moving. There is danger of getting caught or crushed.

A0055210

KEEP AWAY FROM FLAME WHEN ADDING FUEL

When filling the fuel tank with fuel, or when draining the water, always follow the precautions below.
- Stop the engine.
- Do not bring any lighted cigarette or cigarette lighter close to the fuel tank.
- After adding fuel, tighten the cap securely and wipe up any spilled fuel.
- Do not bend the fuel hose or hit it with any sharp object.
- If any hose is loose or damaged, always repair or replace it.

A0055020

A0055030

A0055040

DO NOT TOUCH HIGH-TEMPERATURE, HIGH-PRESSURE PARTS IMMEDIATELY AFTER STOPPING ENGINE

Immediately after stopping the engine, many parts are at high temperature or under high pressure. If parts are removed or touched carelessly, there is danger of burns or other injury.
For the following parts particularly, always wait for the machine to cool down before inspecting.
- Radiator and radiator cap
- Hydraulic tank and hydraulic hoses
- Muffler and all parts of engine.

A0055050

WAIT FOR ENGINE TO COOL BEFORE CHANGING ENGINE OIL

When changing the engine oil, always follow the precautions below.
- Stop the engine and wait for the engine and oil temperature to go down before changing the oil.
- After adding oil, tighten the cap and drain plug securely and wipe up any oil that was spilled.

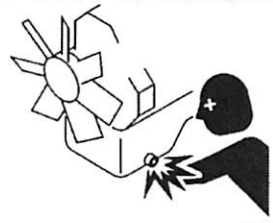

XMA00080

WAIT FOR WATER TEMPERATURE TO GO DOWN BEFORE ADDING COOLANT

Do not add water to the radiator.
Always follow the precautions below.
- Stop the engine and wait for the water temperature to go down.
- When adding water, do not remove the radiator cap. Always add water to the reserve tank.
- After adding water, tighten the cap securely and wipe up any water that was spilled.

XMA05740

A0055040

WAIT FOR PRESSURE TO GO DOWN BEFORE ADDING HYDRAULIC OIL

When adding oil to the hydraulic tank or when changing the oil, always follow the precautions below.
- Lower the dump body and stop the engine.
- Loosen the hydraulic tank cap slowly to release the internal pressure completely, then remove the cap.
- After adding oil, tighten the cap and drain plug securely and wipe up any oil that was spilled.

XMA00110

TAKE CARE WHEN HANDLING HIGH PRESSURE HOSES

Remember that oil is always flowing under high pressure in the hydraulic hoses. Do not remove the hoses before the internal pressure has been released.
When handling the high-pressure hoses, always follow the precautions below.

- Do not bend the high-pressure hoses or hit them with any sharp object.
- If any hose is loose or damaged, repair or replace it.
- It is extremely dangerous if oil is leaking from even small holes in the hoses or hydraulic equipment. If such a problem occurs, please contact your Morooka distributor.

A0055180

BE CAREFUL OF HIGH-PRESSURE GREASE WHEN ADJUSTING RUBBER CRAWLER ATTENTION

The rubber crawler tension adjuster is filled with grease. The grease is kept under high pressure by the recoil spring inside the tension adjuster.
Always follow the precautions below when adjusting the tension. If these precautions are not followed, the valve may fly out and cause serious injury.

- Do not loosen the tension adjustment valve more than one turn. There is danger that the valve may fly out.
- When adjusting the tension, do not stand directly in front of the valve; stand to the side to avoid danger.

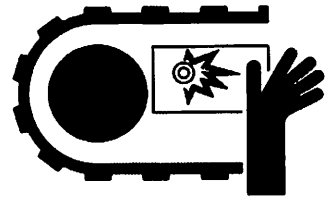
XMA00121

USE SAFETY BAR UNDER DUMP BODY

When going under the dump body to carry out operations, always follow the precautions below.

- Hang a "DO NOT OPERATE !" sign (Part No.: 1-41010-1210) in the operator's compartment to prevent any one else from operating the machine.
- Apply the lock of the dump control lever to prevent the truck box from lowering when the lever is touched inadvertently by an unauthorized person.
  ★ Dump control lever lock: See "OPERATION 4.2 LOCKING DUMP CONTROL LEVER OPERATING".
- Always use the safety bar when going under the dump body.
  ★ Safety bar: See "OPERATION 4.3 OPERATING SAFETY BAR".

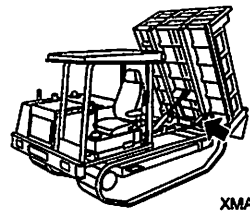
XMA68030

BE CAREFUL WHEN HANDLING BATTERY

- When checking or repairing the electrical system, always remove the negative (-) terminal from the battery to stop the flow of electricity.
  Failure to do this may cause fire or short circuit.
- Be careful not to get battery electrolyte on your skin or clothes. If the battery electrolyte gets on you, wash it off immediately with water.

A0055170

DO NOT SPRAY WATER ON ELECTRICAL COMPONENTS

When washing the machine, do not spray water on the electrical components.
If water gets into the electrical system, it will cause defective operations which may lead to malfunctions.
Cover the following parts with a sheet to prevent water from getting on them.

- Instrument panel and control panel, switches, sensors, connectors
- Starting motor, alternator, sensors, connectors around the engine
- Battery, relay, connectors at front right of machine

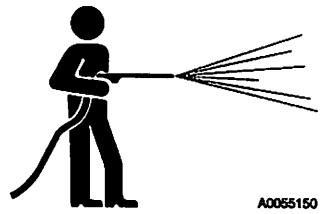

DISPOSE OF WASTE MATERIAL CORRECTLY

- When draining and changing the oil, always put a container under the engine and tank to catch the oil.
- Do not drain the oil directly into the ground or throw it into rivers or the sewage system.
- When disposing of oil, fuel, coolant, solvent, filters, batteries, and other harmful objects, always use a suitable method or procedure.

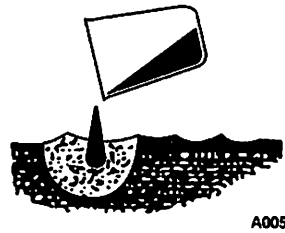

3. PRECAUTIONS BEFORE STARTING ENGINE

ALWAYS CARRY OUT CHECKS BEFORE STARTING

Before starting the engine, always carry out the walk-around checks and inspections given in this manual.

- Check the ground under the machine to see if there is any trace of oil or water leakage.
- Be particularly careful to check the undercarriage for loose or missing nuts and bolts.
- If any abnormalities are found during the check, carry out simple repairs. If the repairs are difficult, please contact your Morooka distributor. The machine must not be used before repairs are carried out.

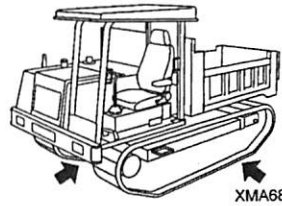
XMA68040

CHECK SAFETY PARTS AND LIGHTING

Check the operation of the following parts and devices needed for operation.

- Check that the horn, buzzer, and turn signal lamps work normally.
- Check that the front lamps light up normally.
- Check that the side mirrors are adjusted so that they give a clear view from the operator's seat.
- Clean the lights to ensure that they give good visibility.
- Adjust the operator's seat to a suitable position for operation. Always adjust the seat if it has been used by another operator.
- Check that the seat belt can be locked properly. Always adjust if it has been used by another operator.

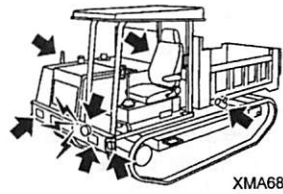
XMA68050

ALWAYS KEEP OPERATOR'S COMPARTMENT CLEAN

Always do the following to keep the operator's compartment clean and tidy.

- Always keep the floor, steps, and handrails free of oil, grease, mud, or water. There is danger that you may slip and be injured. Always wipe off any oil, grease, mud or water.
- Do not leave tools or parts lying around on the floor or steps. Keep these parts in the proper place to prevent them from obstructing operation.

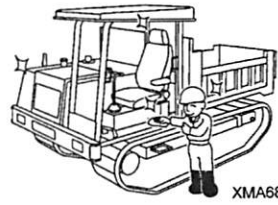
XMA68020

FIRE PREVENTION

- Completely remove all wood chips, leaves, grass, paper and other flammable materials accumulated in the engine compartment. They could cause a fire.
- Check fuel, lubrication, and hydraulic systems for leaks. Have any leaks repaired. Wipe up any excess oil, fuel or other flammable fluids.

A0055020

VENTILATION FOR ENCLOSED AREAS

Exhaust fumes from the engine can kill.

- If it is necessary to start the engine within an enclosed area, open the doors and windows to provide adequate ventilation.

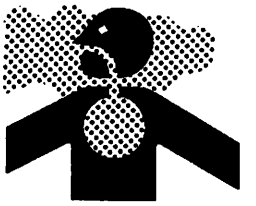

A0055060

SAFETY AT WORKSITE

Before starting operations, thoroughly check the area for any unusual conditions that could be dangerous.

- Check the terrain and condition of the ground at the worksite, and determine the best and safest method of operation.
- If there are any dangerous places, erect signs and take other steps to ensure safety.
- Check the depth and flow of water and the ground condition before operating in water or crossing a river. NEVER be in water which is in excess of the permissible water depth.
- If there are bridges or any other structure, check that they are of sufficient strength to support the weight of the machine.
- Inside the jobsite, do not allow any person other than the signalman to come close. Restrict the entry even of related workers.

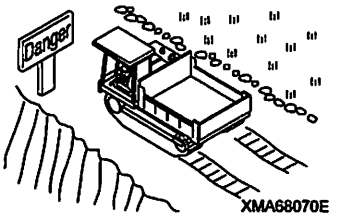

XMA68070E

4. PRECAUTIONS WHEN STARTING ENGINE

PLACE LEVERS AT NEUTRAL

Always place the levers at the following positions.
- Place the travel lever at the N position.
- Place the dump control lever at the HOLD position.
- Set the parking brake switch to the ON (STOP) position.
- Sit properly in the operator's seat and fit the seat belt.

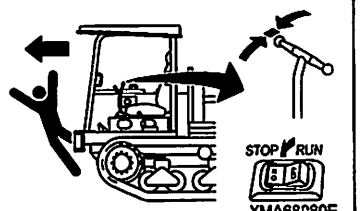

XMA68080E

CHECK FOR SAFETY IN SURROUNDING AREA

Always check that there are no people in the surrounding area. Be particularly careful to check under the machine.
- Never start the engine if a warning tag has been attached to the controls.
- When starting the engine, sound the horn to warn people in the area.
- Do not allow anyone other than the operator to ride on the machine.

5. PRECAUTIONS WHEN TRAVELING

CHECK FOR SAFETY IN SURROUNDING AREA

Always check that there are no people in the surrounding area. Be particularly careful to check behind the machine.
- If the dump body is raised, always lower it.
- Sound the horn to warn people in the area that you are about to start the machine.

AVOID SUDDEN OPERATIONS EXCEPT IN EMERGENCIES

Do not suddenly start, suddenly stop, or suddenly turn the machine or carry out any other operation suddenly. Such operations may cause the crawler to come off and the machine to tip over.
- When starting or turning the machine, operate the travel lever slowly. Run the engine at low speed.
- Return the travel lever slowly to the N position. Apply the brake to stop the machine.
- If the travel lever is moved too far beyond the N position to the REVERSE (or FORWARD) position, the engine will run in reverse, or other problems will occur.
- Do not use the parking brake to stop the machine.
- If a dangerous state occurs by any possibility, and when it becomes necessary to stop the machine urgently, press the parking brake switch to set it to the ON (STOP) position or turn the engine starting switch to the OFF position to stop the engine.

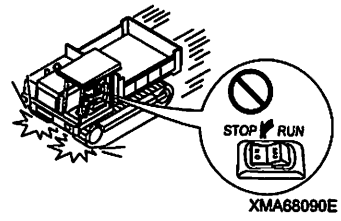

XMA68090E

TRAVEL CAREFULLY ON UNEVEN GROUND OR ON CURVES

When traveling on uneven ground or in places where there are many curves, reduce the travel speed and travel carefully. If the machine is traveling at high speed it may turn over or crawler may come off.

NO TRAVELING ON PUBLIC ROADS

This machine is not permitted to travel on public roads.
When moving the machine, always transport it by truck or trailer.

BE CAREFUL OF ROAD SHOULDERS

When traveling on narrow agricultural roads, always follow the precautions below.
- Do not travel too close to the road shoulder, and travel at reduced speed.
- Do not travel on any soft road shoulder or place covered with grass.
- During or after rain, the danger of landslides and falling rocks increases. Always travel at low speed and check that the area is safe.

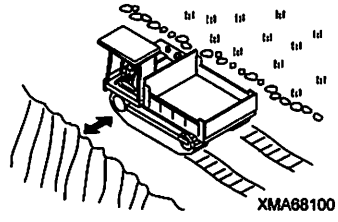
XMA68100

AVOID OBSTACLES

Avoid traveling over obstacles or earth embankments as far as possible. If the machine has to travel over an obstacle, do as follows.
Never travel over large boulders, breakable objects, pieces of concrete, or other sharp objects.

- Reduce the travel speed and travel carefully.
- Steer the machine so that the center of the rubber crawler passes directly over the obstacle. Mount the obstacle slowly, and when the machine goes over the top and starts to tip forward, stop the machine. Then slowly start the machine again. Never change direction when doing this.
- Earth embankments may collapse under the weight or vibration of the machine and cause the machine to slip, so drive the machine slowly and do not change speed or direction.
  Be particularly careful when traveling over freshly dug ditches. They may collapse.

XMA68110

TRAVELING ON SLOPES

When traveling on hills or slopes, always follow the precautions below.

- Do not travel at an angle on a hill or slope, or parallel to the slope. Such action could result in the machine tipping over or slipping.
- When traveling up hills or slopes, always travel directly up the slope. Set the travel speed to a low range and keep the travel lever close to the N position (low speed).
- Do not suddenly change speed on the slope. There is danger that the direction of the machine may suddenly change and the machine may slip.
- When traveling down slopes, set the travel speed to a low range, run the engine at low idling, and operate the travel lever to a position less than 1/2 of the full stroke from the N position.
  If the machine travels too fast, there is danger that the engine will overrun and the machine may slip.
- Do not travel on grass, fallen leaves, wet steel plates, or other slippery objects.
- If a dangerous state occurs by any possibility, and when it becomes necessary to stop the machine urgently, press the parking brake switch to set it to the ON (STOP) position or turn the engine starting switch to the OFF position to stop the engine.

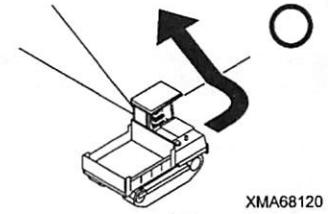
XMA68120

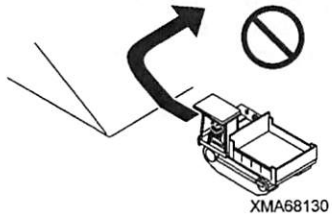
XMA68130

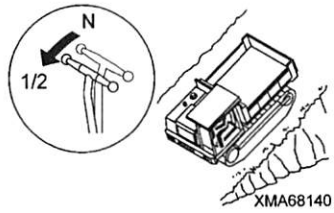

XMA68140

ENSURE GOOD VISIBILITY

When working in dark places or at night, turn on the head lamps.
Turn on the lights in mist, snow, or rain.

OPERATE CAREFULLY ON SNOW

- When working on snow or icy roads, even a slight slope may cause the machine to slip to the side, so always travel at low speed and avoid sudden starting, stopping, or turning.
- When there has been heavy snow, the road shoulder and objects placed beside the road are buried in the snow and cannot be seen, so always carry out operations carefully.

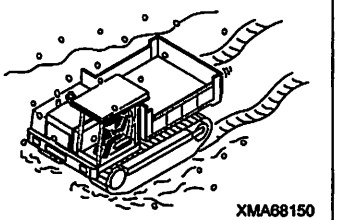

XMA68150

PARKING MACHINE

Park the machine on firm, level ground.
Select a place where there is no problem of falling rocks, landslides, or floods.
If the machine has to be parked on a slope, do as follows.
- Stop the machine facing directly up or down the slope.
- Always put blocks under the tracks to prevent the machine from moving.
- Lower the dump body fully.

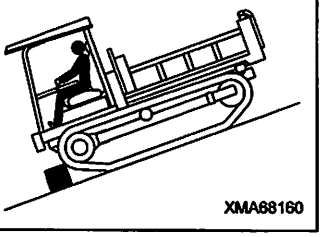

XMA68160

REMOVE KEY WHEN LEAVING MACHINE

When leaving the machine, always do as follows.
- Lower the dump body fully.
- Apply the parking brake, then stop the engine.
- Lock the dump control lever.
- Remove the starting key and always take it with you.

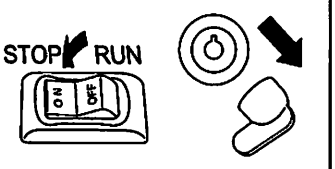

XMA68170E

6. PRECAUTIONS FOR OPERATION

USE SIGNALS

When carrying out work with one or more workers, or when using a signalman, determine the signals and the person in charge before starting work, and always follow the agreed procedure.
Even when using a signalman, always pay careful attention to the following.

- When working in confined spaces or indoors, be careful not to hit the surroundings or the ceiling.
- When operating in urban areas or on roads, put up fences around the jobsite and take steps to ensure the safety of passing traffic and pedestrians.

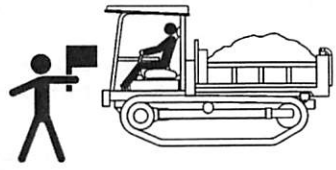
XMA68180

MAKE JOBSITE FLAT

Make the jobsite flat. This will not only increase the efficiency but will also ensure safety.
If the jobsite is dusty, spray water to ensure the visibility.

OPERATE DUMP BODY CAREFULLY

When carrying out dumping operations, be careful of the following.

- Check that there is no person or obstacle near the dump body.
- Stop the machine at the determined point and operate the dump in accordance with signals from the signalman.
- Block the tracks to prevent the machine from moving in reverse.
- When dumping on slopes, there is danger of the machine tipping over. If it is felt that there is danger to the machine, stop the operation immediately.

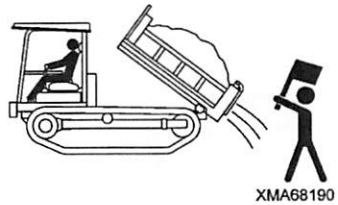
XMA68190

NO OVERLOADING

Never load the machine above its capacity.
Overloading will not only cause failures, but will also cause overrunning and tipping over on slopes.

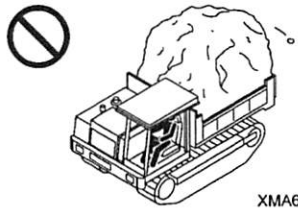
XMA68200

LOAD DUMP BODY EVENLY

- Do not load the dump body on one side. Always spread the load to maintain the balance in the dump body.
- When carrying long objects, such as timber or steel beams, give careful consideration to the position of the center of gravity of the load, and secure with ropes.
- When stacking U-shaped ditch liners or concrete blocks, lay a plate down first and secure with ropes to prevent the load from slipping.

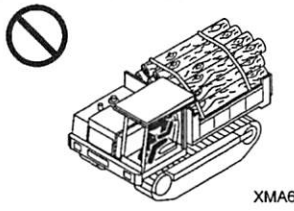
XMA68210

DO NOT GO CLOSE TO HIGH-VOLTAGE CABLE

When carrying out operations on jobsites where there are power cables, use a signalman and take steps to protect the electric cables. Check with the electricity company before starting operations.

- Going close to high-voltage cables can cause electric shock, even if the machine does not touch the cables. Always maintain the safe distance given below between the machine and the electric cable.

	Voltage of Electrical Cable	Minimum Safe Distance
Low voltage (Distribution line)	100 • 200V	2m
	6,600V	2m
Special (Transmission line)	22,000V	3m
	66,000V	4m
	154,000V	5m
	187,000V	6m
	275,000V	7m
	500,000V	11m

- If the dump body should touch the electric cable, the operator should not leave the operator's compartment. He should call another worker to report the situation.
  The following actions are effective in preventing accidents.
  (1) Wear shoes with rubber soles.
  (2) Use a signalman to give warning if the machine approaches too close to the electric cables.
- When carrying out operations near high-voltage cables, do not let anyone come close to the machine.

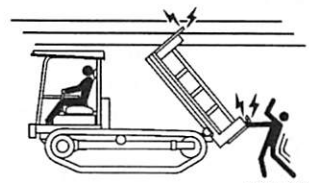

XMA68220

7. PRECAUTIONS FOR TRANSPORTATION

USE SAFE RAMPS

Always use ramps which fulfill the following conditions.
- Strong ramps which can fully support the weight of the machine.
- Ramps with a width greater than the width of the crawlers.
- Ramps of a length which will not form a steep angle when placed against the platform of the truck or trailer to be used for transportation.
  If the ramps are too long and they bend excessively, use blocks to support the ramps as necessary.
- Ramps with hooks and non-slip surface.
- Be sure that the ramp surface is clean and free of grease, oil, ice and loose materials. Remove dirt from the machine tracks.

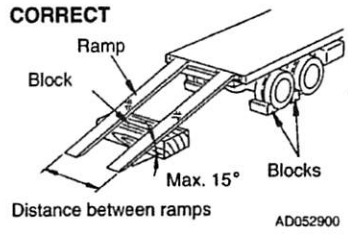

LOADING AND UNLOADING

Loading and unloading the machine always involves potential hazards. EXTREME CAUTION SHOULD BE USED.
Always do as follows
- Perform loading and unloading on firm level ground only.
- Stop the engine of the haulage truck, apply the parking brake securely, then block the tires.
- Set the ramps parallel and in line with the width of the crawlers.
- Fix the hooks of the ramps securely to the truck platform.
- Set the machine to be loaded in line with the ramps, then approach the ramps at low speed.
- Do not correct the direction of travel when on the ramps.
  If it is necessary to change the direction, drive the machine off the ramps, and set the machine to the correct direction.
- After loading, put blocks under the front and rear of the crawlers to prevent the machine from moving, then tie the machine down with chains or wire rope.

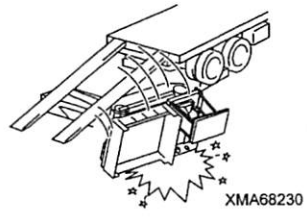

SHIPPING

- When shipping the machine on a hauling vehicle, obey all state and local laws governing the weight, width, and length of a load. Also obey all applicable traffic regulations.
- Take into account the width, height and weight of the load when determining the shipping route.

8. POSITION FOR ATTACHING SAFETY LABELS

Always keep these labels clean.

If they are lost or damaged, always attach them again or replace them with a new label.

There are other labels in addition to the safety labels listed as follows, so handle them in the same way.

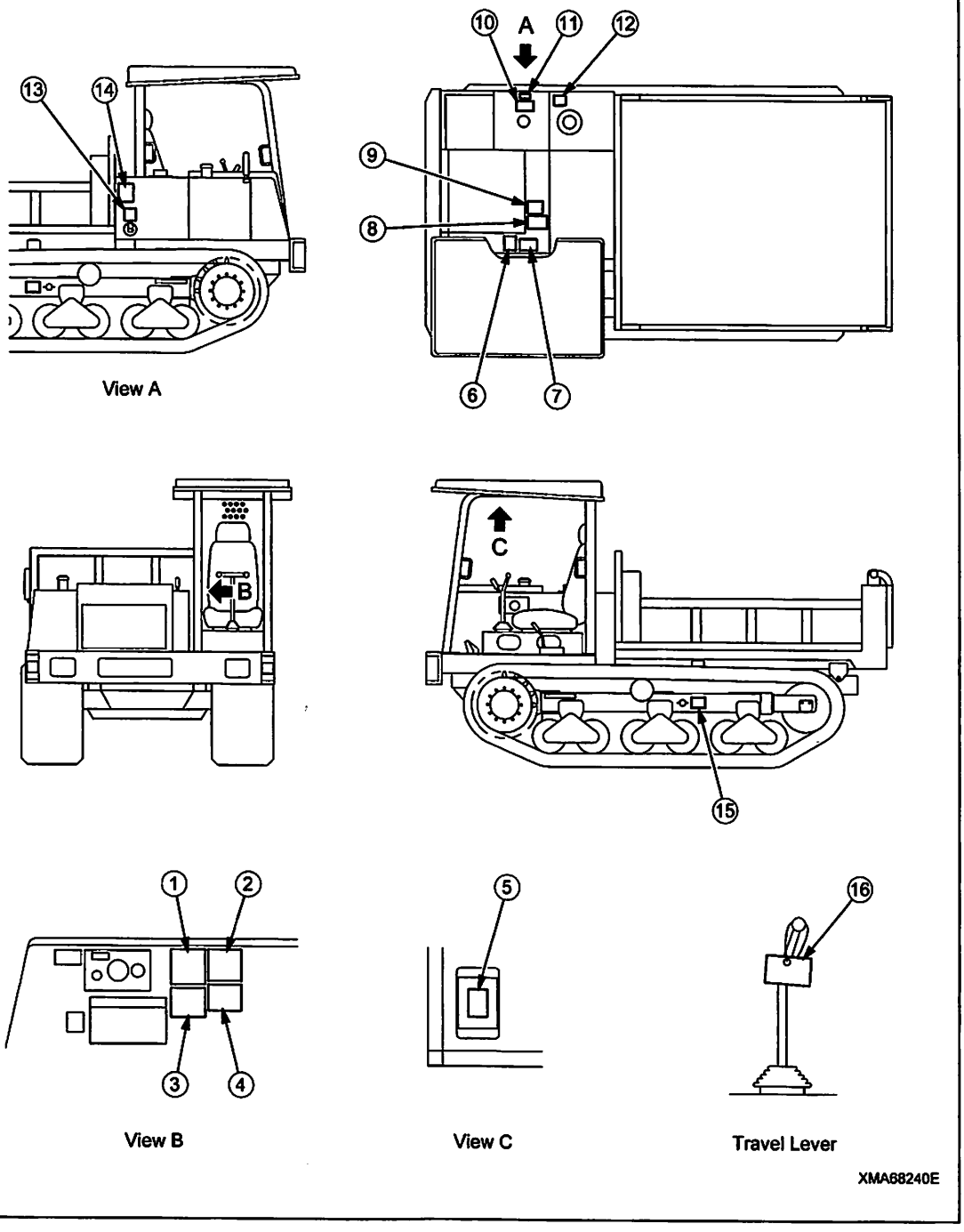

(1) machine Precautions when travelling downhill (1-41010-1290)

⚠WARNING

WHEN TRAVELLING DOWN SLOPES

- When traveling down slopes, reduce the engine speed before traveling on slopes, adjust the travel level throttle, and travel down the slope at low speed.
- DO NOT travel across or parallel slopes. The machine may overturn sideslips.
- NEVER travel down slopes at engine speed more then the rated engine speed. This may overturn and dangerous slipping.

1-41010-1290

(2) Precautions when operation (1-41010-1330)

⚠WARNING

- Before operating the machine read the Operation & Maintenance Manual carefully.
- Take extra care when traveling on uneven ground or oval-shaped ground. Depending on the track tension,this may cause the track to disengage or the machine to damage.
- Always check if there are stones clogged around the inks before starting.
- When entering under the dump body for checking, always use the safety bar to prevent the dump body lowering.
- Always dump the load on the level, hard ground.
- When leaving the operators seat, put the travel lever in the N position, and put the parking brake or the switch in the STOP position.
- DO NOT use the parking brake as the service brake except in an emergency.
- When leaving the machine, always take the key.

1-41010-1330

(3) Precaution for starting engine and leaving (1-41010-1320)

⚠WARNING

STARTING ENGINE AND MACHINE

- When starting engine, put the travel lever in the N position, and put parking brake lever or the switch in the STOP position.
- When traveling the machine, always put the parking brake lever or the switch in the RUN position.
- Ensure safety around the machine, sound the horn and start.
- DO NOT operate abruptly: this means no startingabruptly, stopping abruptly or turning abruptly. Operating abruptly may cause the track to disengage or cause the machine to fall over.

1-41010-1320

(4) Caution for periodic replacement parts (1-12020-1210)

⚠ CAUTION

Replace the following parts periodically.

Periodic replacement parts	Replacement interval
Fuel hose (from fuel tank to fuel injection pump)	Every 2 years
Fuel hose (from fuel injection pump to fuel tank)	
Hydraulic hose (from main pump to travel motor)	
Hydraulic hose (from gear pump to main control valve)	
Hydraulic hose (from dump control valve to dump cylinder)	
Hydraulic hose (between left and right dump cylinder)	
Seat belt	Every 3 years

1-12020-1210

(5) Precautions for slope alarm (1-41010-1360)

⚠WARNING

DANGER SLOPE ALARM

Alarm sound on dangerous slopes, Travel at slow speed on down slopes.

1-41010-1360

(6) Precautions for warming-up operation (1-41010-1230)

⚠ WARNING

SEAT BELT

- Always fasten the seat belt during operation.

1-41010-1310

(7) Precautions when fitting seat belt (1-41010-1310)

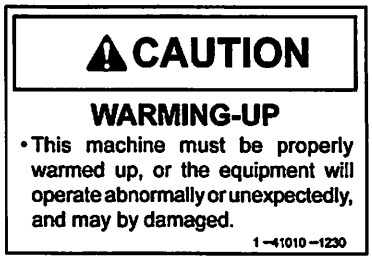

(8) Beware of rotating fan and pulley (1-41010-1260)

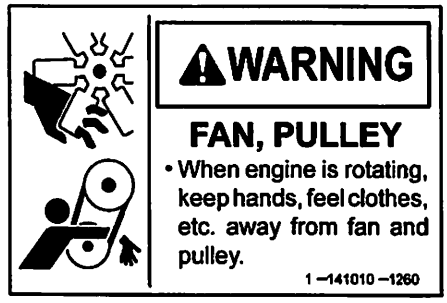

(9) Beware of high-temperature coolant (1-41010-1300)

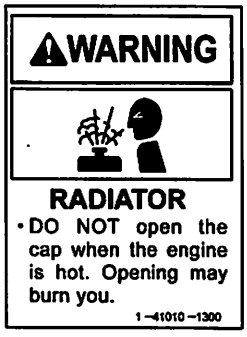

(10) Precautions when adding fuel (1-41010-1280)

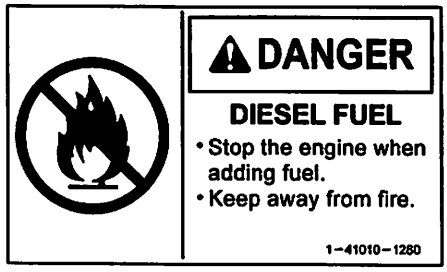

(11) Precautions for diesel fuel (1-12020-1310)

(12) Precautions for oil inside hydraulic tank (1-41010-1250)

(13) Precautions for high temerature muffler (1-41010-1220)

(14) Beware of rotating crawler (1-41010-1240)

(15) Precautions for crawler adjustment valve
(1-41010-1270)

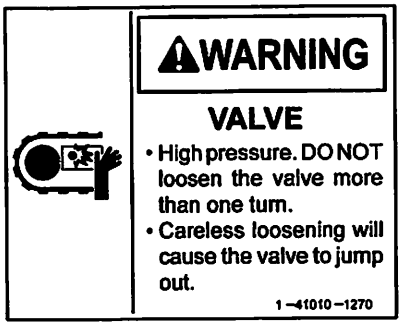

(16) Warning tag to prevent operation during maintenance
(1-41010-1210)

OPERATION

1. General view	2-2
2. Explanation of components	2-5
3. Operation	2-20
4. Handling dump body	2-35
5. Handling rubber crawler	2-38
6. Transportation	2-40
7. Cold weather operation	2-41
8. Long-term storage	2-43
9. Handling battery	2-44
10. Troubleshooting	2-47

1. GENERAL VIEW

1.1 GENERAL VIEW OF MACHINE

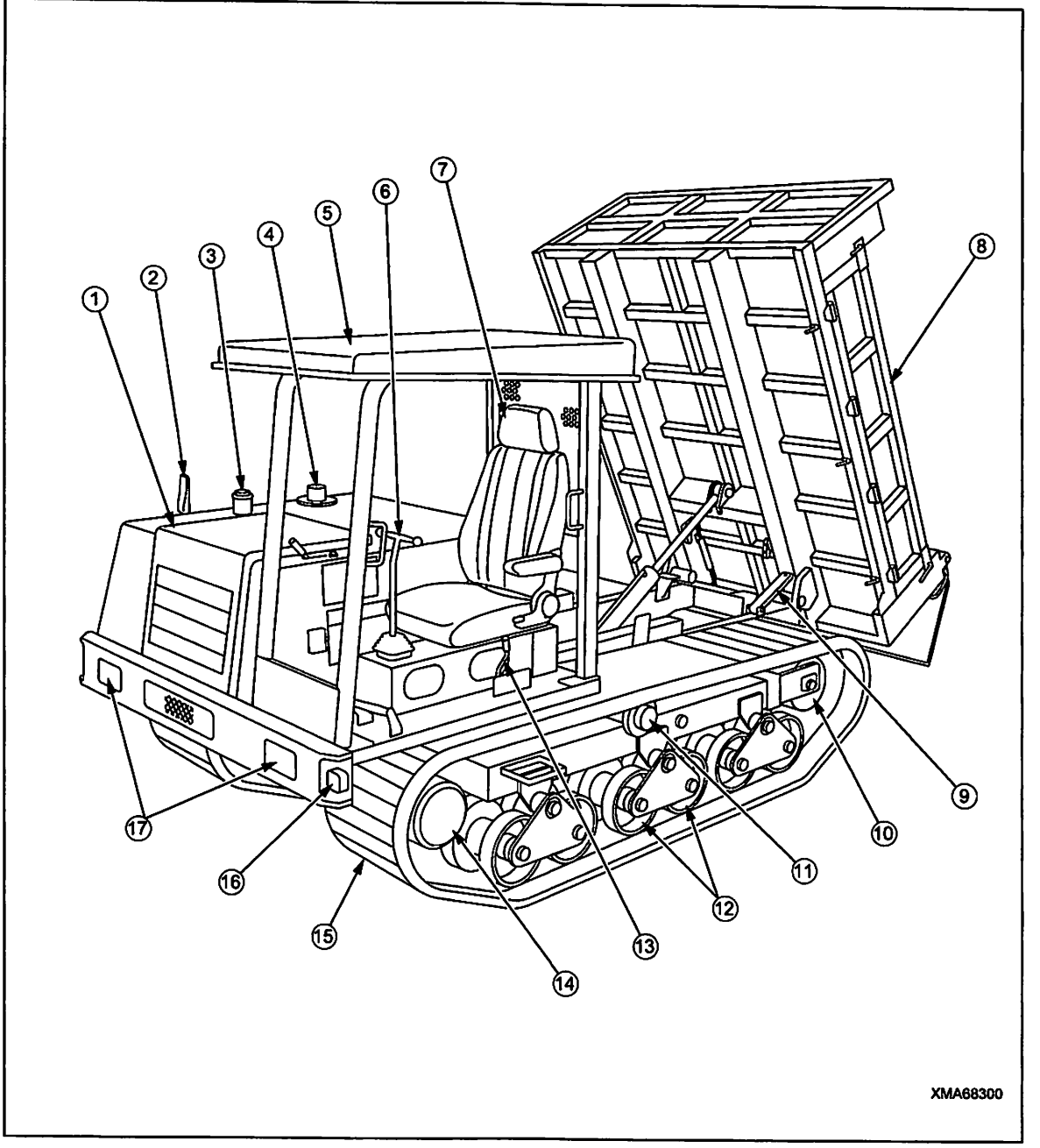

(1) Engine bonnet
(2) Rear view mirror
(3) Fuel tank
(4) Hydraulic tank
(5) Canopy
(6) Travel Lever
(7) Operator's seat
(8) Dump body
(9) Safety bar
(10) Rear idler
(11) Carrier roller
(12) Track roller
(13) Dump control lever
(14) Travel motor, sprocket
(15) Rubber crawler
(16) Turn signal lamp
(17) Head lamp

1.2 GENERAL VIEW OF OPERATOR'S COMPARTMENT

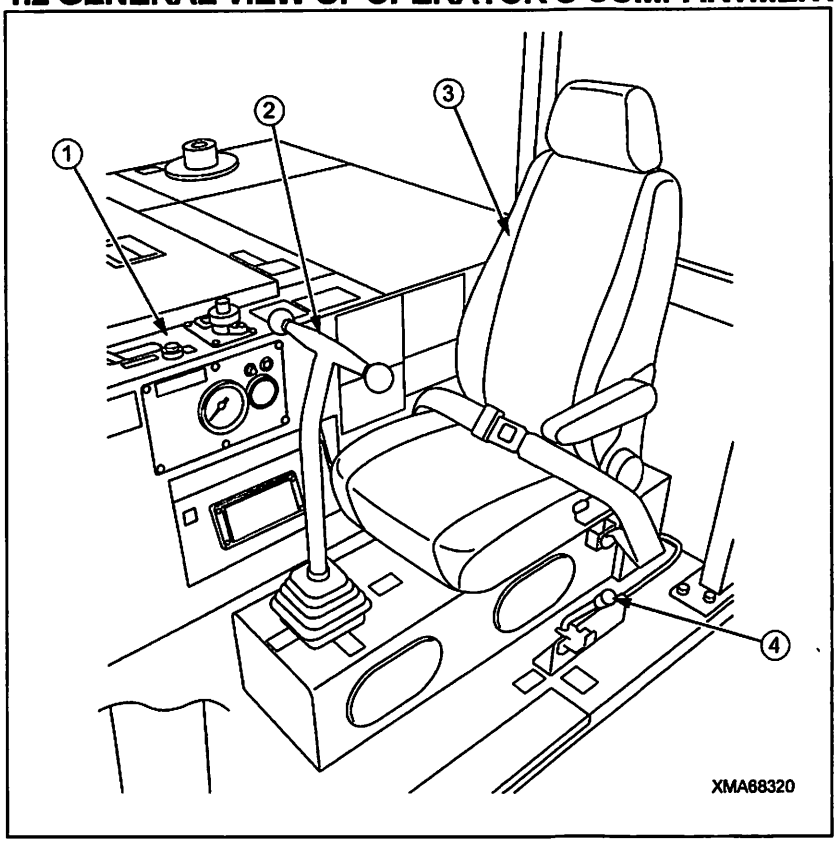

(1) Control panel box
(2) Travel lever
(3) Operator's seat
(4) Dump control lever

1.3 GENERAL VIEW OF CONTROL PANEL BOX

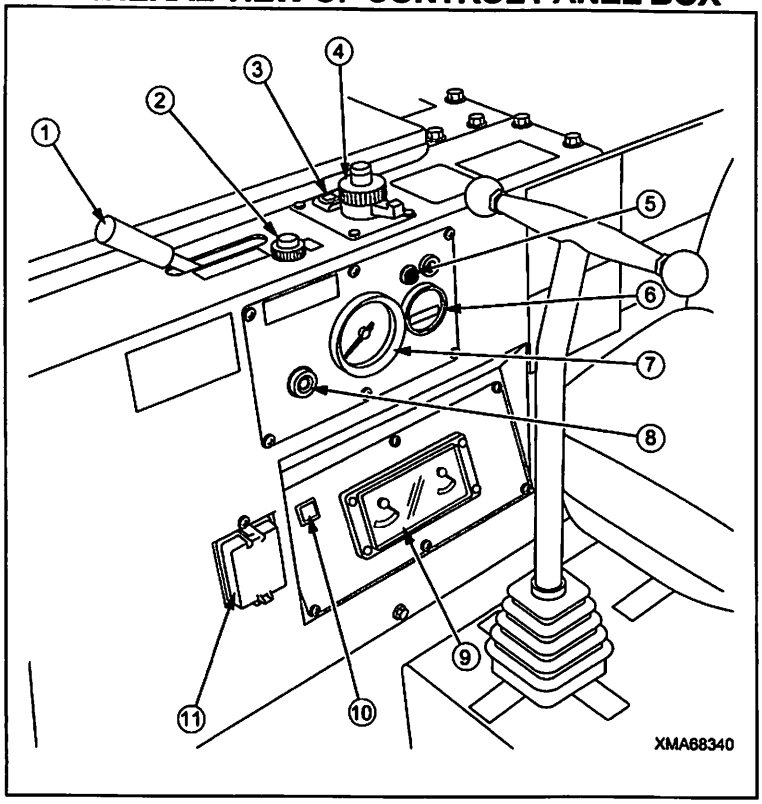

(1) Engine throttle lever
(2) Hi-Lo speed range selector switch
(3) Parking brake switch
(4) Combination switch
(5) Slope caution lamp
(6) Hourmeter
(7) Tachometer
(8) Starter switch
(9) Monitor panel
(10) Preheating indicator lamp
(11) Fuse box cover

1.4 GENERAL VIEW OF MONITOR PANEL

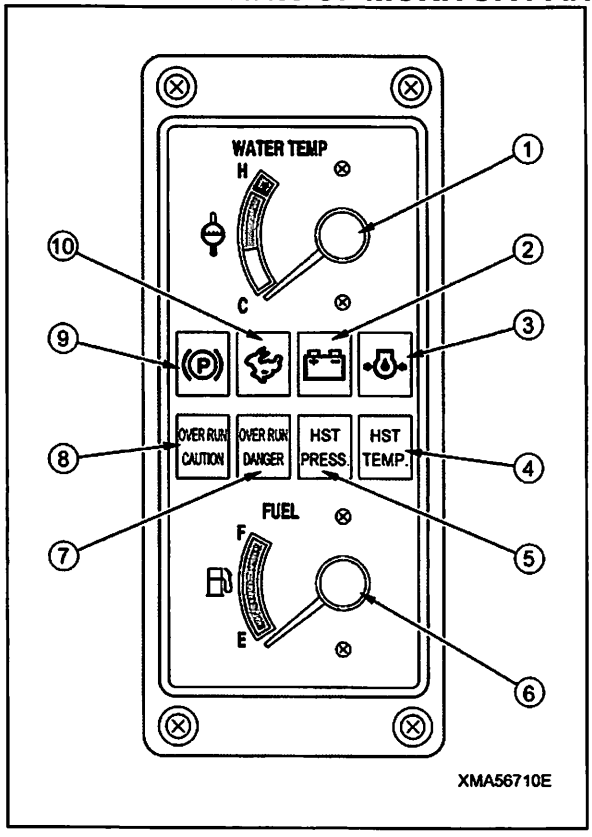

(1) Engine water temperature gauge
(2) Battery charge lamp
(3) Engine oil pressure caution lamp
(4) HST oil temperature caution lamp
(5) HST oil pressure caution lamp
(6) Fuel gauge
(7) Over-run danger lamp
(8) Over-run caution lamp
(9) Parking brake pilot lamp
(10) High speed travel pilot lamp

2. EXPLANATION OF COMPONENTS

The following is an explanation of devices needed for operating the machine.
To carry out suitable operations correctly and safely, it is important to understand fully the methods of operating the equipment and the meanings of the displays.

2.1 METERS AND LAMPS ON CONTROL PANEL BOX

[1] TACHOMETR

⚠ WARNING

When traveling uphill or downhill, be sure to regularly check the tachometer to ensure the engine is running at an appropriate speed. In particular, when traveling downhill, run the machine at a slow speed as much as possible to prevent an overrun.

This shows the engine speed.

★ Immediately after the engine started, the tachometer indication is unstable for a few seconds, but after that, it should show the correct value.

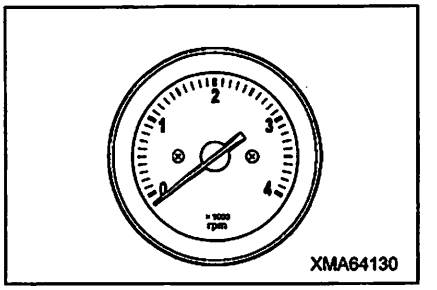

XMA64130

[2] HOURMETER

This shows the total number of hours of the operation of the machine.
When the starting switch is at the ON position, the meter will advance even if the machine is not moving.
Use the hourmeter reading as the standard for periodic inspection and maintenance.

★ When you stop the engine, always turn the starting switch to the OFF position.

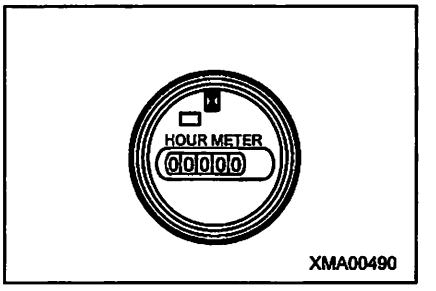

XMA00490

[3] SLOPE CAUTION LAMP

⚠ WARNING

If this lamp lights up when traveling downhill, the machine has exceeded the permissible range of the slope angle. To prevent the danger of overrun, carry out the following operations quickly and continue to travel downhill.

1. **Return the travel lever to the N position and set the travel speed to a range where it does not naturally increase.**
2. **Operate the engine throttle lever to reduce the engine speed.**
3. **If the OVERRUN CARE lamp on the monitor panel lights up even when the above operation is carried out, it means that the machine is exceeding the safe travel speed.**
   Stop the machine immediately and reduce the load on the dump body.

This lamp warns the operator that the machine has entered the danger zone for the angle of the slope.
If the machine exceeds the permissible slope angle (9 deg) when traveling, the slope alarm buzzer under the operator's seat will sound for 5 seconds and the monitor lamp will light up.

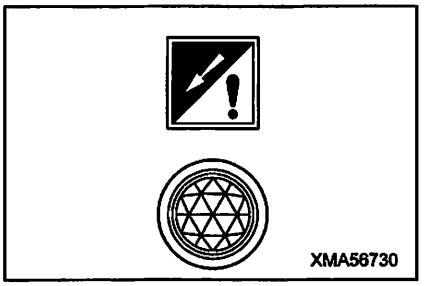
XMA56730

[4] PREHEATING INDICATOR LAMP

This informs the operator of the actuation condition of the preheating. When the starting switch is turned to HEAT, it lights up and then goes out to inform the operator that the preheating of the engine is completed.

★Use the HEAT position of the starting switch when starting in cold weather on when it is difficult to start the engine.

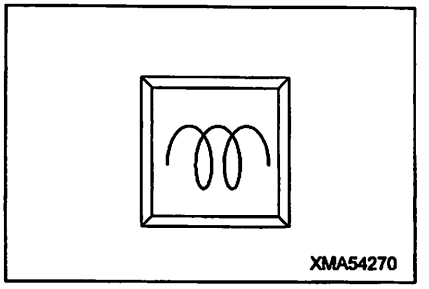

XMA54270

2.2 METERS AND LAMPS ON MONITOR PANEL

[1] ENGINE WATER TEMPERATURE GAUGE

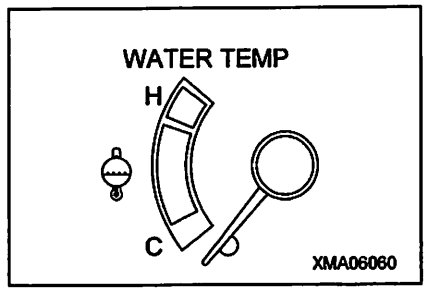

This indicates the temperature of the engine cooling water.
During operation, the indicator point s should be in the green range.
If the indicator point s is red range, run the engine at low speed and wait for the indicator point s to go down to the green range.
★After stopping the engine, check for leakage of water from the radiator, and clogging of the radiator core.
Check also that the fan belt tension and check damage to the fan belt.

[2] FUEL GAUGE

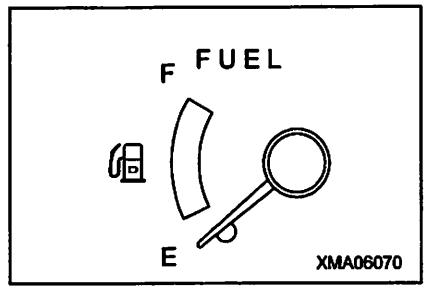

This indicates the amount of fuel remaining in the fuel tank.
When the starting switch is at the ON position, if the indicator points to the E, there is little fuel remaining, so fill the tank.
★Make it a rule to fill the tank (to the point where the indicator points to F when completing the work at the end of each day.

[3] PARKING BRAKE LAMP

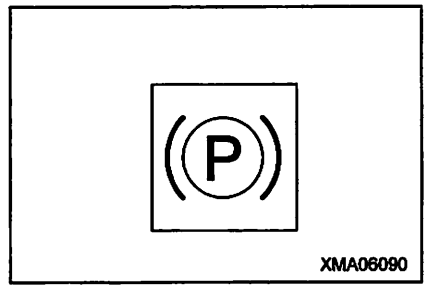

This shows the operation of the parking brake.
If the parking brake switch is set to the ON (STOP) position when the engine is running, the lamp lights up.
If the parking brake switch is set to the OFF (RUN) position when the engine is running, the lamp goes out.

[4] HIGH-SPEED TRAVEL PILOT LAMP

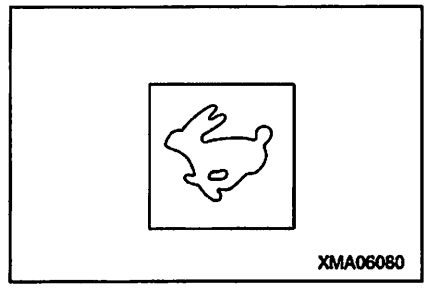

This lights up to inform the operator that the machine is in the high speed travel range.
When the Hi-Lo speed range selector switch is pressed to set it to the HIGH SPEED, the lamp lights up.
When the Hi-Lo speed range selector switch is pressed again to set it to the LOW SPEED, the lamp goes out.

[5] BATTERY CHARGE LAMP

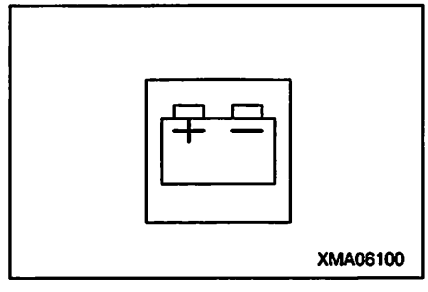

This shows the condition of the charging system.
It lights up when the starting switch is turned ON, and when the engine is started and the speed rises, it should go out.
If it lights up during operations, there is an abnormality in the charging system.
Stop the engine immediately and check for the problem.
★Check the alternator and fan belt tension.
★If the inspection shows that there is no abnormality, please contact your distributor.

[6] ENGINE OIL PRESSURE LAMP

This warns the operator that the engine oil pressure has dropped.
It should be out during operations.
If it lights up during operations, the engine oil pressure has dropped.
Stop operations immediately and check for the cause.

★Check the engine oil level. Check also for clogging of the engine oil filter.

★If the inspection shows that there is no abnormality, please contact your distributor.

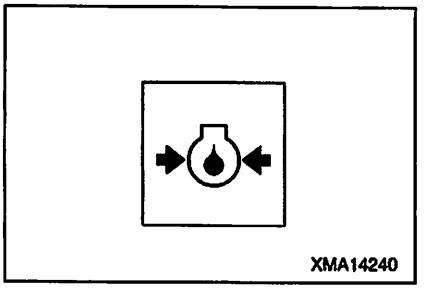
XMA14240

[7] OVERRUN CARE LAMP

⚠ WARNING

If this lamp lights up when traveling downhill, it means that the machine is in an extremely dangerous situation. Carry out the following emergency operation to stop the machine immediately.
1. Return the travel lever to the N position and apply the brakes.
2. When the machine stops, move the dump control lever to the RAISE position to dump the load and reduce the weight.
3. Return the throttle lever to the LOW SPEED position to re duce the engine speed.
4. Put the travel lever as close as possible t the N position, then start traveling downhill again.

NOTICE

The overrun care indicator may also light up when the engine is accelerated under no load, or when the machine is traveling unloaded on flat ground, but this does not indicate any abnormality.

When the machine is traveling on a slope, this warns the operator that the machine is in an extremely dangerous situation.
The monitor lights up if the engine and HST (main pump, travel motor) exceed the normal maximum engine speed when traveling downhill.

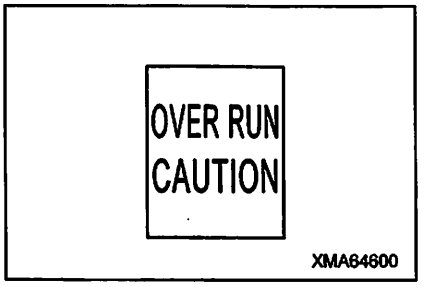

XMA64600

[8] OVERRUN DANGER LAMP

⚠ WARNING

- **If this lamp lights up when traveling downhill, it means that the machine is in an extremely dangerous situation. Carry out the following emergency operation to stop the machine immediately.**
  1. Return the travel lever to the N position and apply the brakes.
  2. Return the throttle lever to the LOW SPEED position to reduce the engine speed.
  3. If it is not possible to stop the machine completely, set the parking brake switch to the STOP position to apply the parking brake.
- **If the emergency brake has been used in such an emergency, always carry out inspection and repair of the parking brake. If the machine is used without checking the parking brake, there is danger that the parking brake may not work effectively.**

When the machine is traveling on a slope, this warns the operator that the machine is in an extremely dangerous situation.
The monitor lights up if the engine and HST (main pump, travel motor) exceed the danger limit for the engine speed when traveling downhill.

XMA64610

[9] HST OIL PRESSURE LAMP

This warns the operator that the HST oil pressure has dropped.
It should be out during operations.
If it lights up during operations, the HST oil pressure has dropped.
Stop operations immediately and check for the cause.

★Check the line filter and strainer for clogging, check for oil leakage from the hydraulic piping, and check the oil level in the hydraulic tank.

★If the inspection shows that there is no abnormality, please contact your distributor.

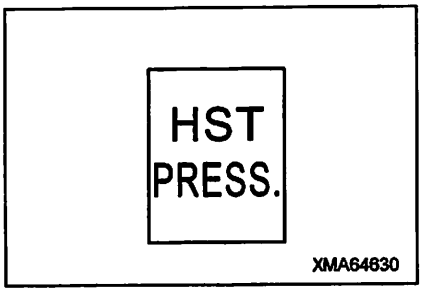

[10] HST OIL TEMPERATURE LAMP

This warns of an abnormality in the HST hydraulic oil temperature.
This lamp should be out during operations.
If it lights up during operations, the HST hydraulic oil temperature has dropped below 20 deg C or has risen to approx. 95 deg C.
If the HST hydraulic oil temperature is below 20 deg C, carry out the warming-up operation until the monitor goes out.
If the HST hydraulic oil temperature has gone above 95 deg C, take steps to reduce the load on the machine, such as reducing the payload, reducing the engine speed, and avoiding continuous operation under load.

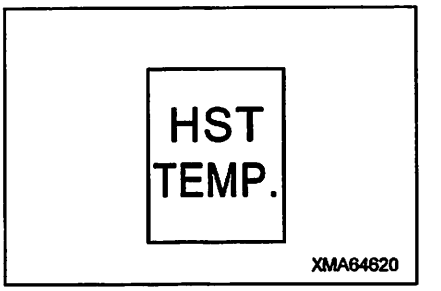

2.3 SWITCHES AND LEVERS ON CONTROL PANEL BOX

[1] STARTING SWITCH

This switch is used to start and stop the engine.

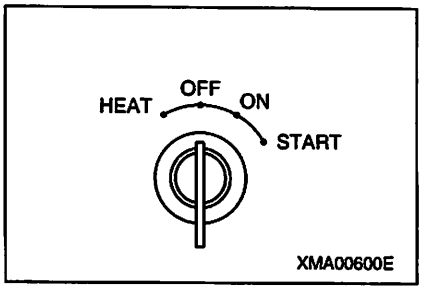

- OFF: The starting key can be inserted and removed at this position. When the key is turned to this position, all the switches for the electric circuits are turned off, and the engine stops.
- ON : Electricity flows to the charging circuit and lamp circuit.
- START: This is the position for starting the engine (the starting motor turns).
- PREHEAT: When starting the engine in low temperatures, set the key to this position. The engine intake air is heated to make it easier to start the engine. When the preheating indicator lamp (glow indicator) lights up and the preheating is completed, turn the starting key quickly to the START position to start the engine.

★After the engine is started, do not turn the key to the OFF position except when stopping the engine.

[2] ENGINE THROTTLE LEVER

NOTICE

- **If the engine is stopped before it has cooled down properly, there is danger that the service life of the engine parts will be reduced. Never stop the engine suddenly except in cases of emergency.**
- **If the engine has overheated, do not suddenly stop it. Run the engine at a midrange speed and gradually cool it down before stopping it.**

This lever is used to control the engine speed and output.

- Pulled back: Engine runs at high speed
- Pushed forward: Engine runs at low speed

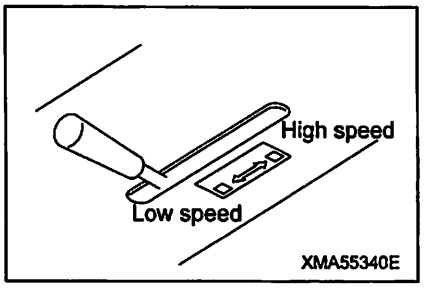

[3] HI-LO SPEED RANGE SELECTOR SWITCH

⚠ WARNING

- **When traveling on slopes, always set the travel speed range to low speed. If the machine is driven in the high speed range, it will cause the engine to overrun.**
- **When traveling with a load, always set the travel speed range to low speed. If the machine is driven in the high speed range, it will cause the engine to overheat.**

This switch is used to select the travel speed range.

When the switch is operated, the speed selection mechanism inside the travel motor is actuated and the machine enters the high speed range or low speed range.

In the high speed range and low speed range, if the engine speed and the amount the travel lever is operated are the same, the travel speed changes.

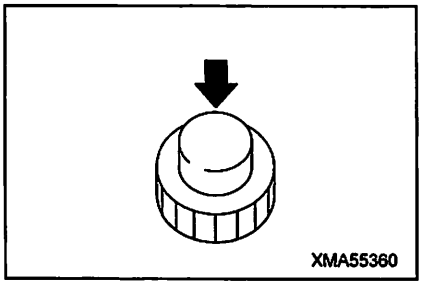

- Push (HIGH): The travel motor changes to the high speed range and the high speed lamp on the monitor panel lights up.
- Push again (LOW): The travel motor changes to the low speed range and the high speed lamp on the monitor panel goes out.

[4] PARKING BRAKE SWITCH

NOTICE

Before starting the engine, always press the parking brake switch to set it to the STOP (parking) position. If it is not in this position, the engine cannot be started.

This switch is used to operate the parking brake inside the travel motor.

- ON (STOP): The parking brake is applied, the parking brake lamp on the monitor panel lights up, and the alarm buzzer sounds.
- OFF (RUN): The parking brake is released and the parking brake lamp on the monitor panel goes out.

XMA68360E

[5] COMBINATION SWITCH

This switch is used to operate the horn, head lamps, lighting, and turn signal lamps.

- Press center of switch: Horn sounds.
- Turn switch knob one stage clockwise: Head lamp (Lo) and instrument lighting light up.
- Turn switch knob two stages clockwise: Head lamp (Hi) and instrument lighting light up.
- Move lever back: Left turn signal lamp flashes.
- Move lever forward: Right turn signal lamp flashes.

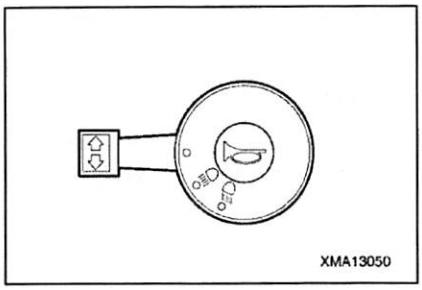
XMA13050

2.4 WARNING DEVICES

[1] HORN

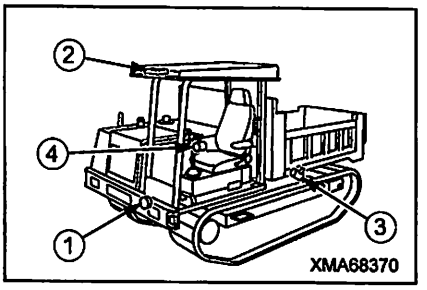

Horn (1) is installed inside the front grill to the frame on the left side of the radiator.

When the starting switch is turned ON and the horn switch is pressed, horn (1) will sound continuously.

Always sound the horn to warn the people in the surrounding area before starting the engine or before moving the machine off.

[2] SLOPE ALARM BUZZER

Slope alarm buzzer (2) is installed under the operator's seat.

If the angle of the slope goes above the set angle when the machine is traveling, slope alarm buzzer (2) will automatically sound intermittently to warn the operator that the angle is too large.

It is dangerous to continue traveling with the dump body loaded when slope alarm buzzer (2) sounds.

When traveling downhill, do as follows to prevent any danger from overrunning.

1. Operate the throttle lever to set the **engine speed to low speed.**
2. Set the travel lever **as close as possible to the N position,** then drive the machine carefully.
3. If the load in the dump body exceeds the maximum payload or is near the maximum payload, reduce the load.

[3] BACKUP BUZZER

Backup buzzer (3) is installed on the left side inside the frame at the rear of the chassis.

When the engine is started and the travel lever is operated to REVERSE, backup buzzer e will sound intermittently to warn the operator that the travel lever is at the REVERSE position.

[4] PARKING BRAKE BUZZER

Parking brake buzzer (4) is installed inside the control box in the operator's compartment.

When the starting switch is turned to ON position and the parking brake switch is operated to the ON (STOP) position, parking brake buzzer (4) will sound intermittently to inform the operator that the parking brake is applied.

2.5 TRAVEL LEVER

⚠ WARNING

- **Always stop the machine before switching the travel levers between FORWARD and REVERSE. If the direction of travel is suddenly changed, it may cause damage to the machine.**
- **Do not operate the travel lever by a large amount suddenly. Always operate them slowly. If they are suddenly operated, the machine and the operate will suffer a large shock.**
- **When stopping the machine, do not return the travel lever past the N (neutral) position. If the lever is moved past the N (neutral) position, it will cause failure such as reverse rotation of the engine.**
- **Do not make unnecessary counter rotation turns or sudden turns at high speed. There is danger that the crawlers and hydraulic equipment may be damaged, or that the machine may hit some other object.**

The travel lever is used to drive the machine in forward or reverse, to stop or steer the machine, and to control the travel speed.

★The travel lever becomes heavier as there is operated in the direction of FORWARD or REVERSE, and becomes lighter as there is operated back towards N (neutral).

When the travel lever is placed in REVERSE, the backup buzzer will sound.

[1] TRAVELING STRAIGHT OR STOPPING

Operate the travel lever to the front or rear.

- FORWARD: Push the levers forward.
- REVERSE: Pull the levers back.
- STOP: Return the levers to the N position.

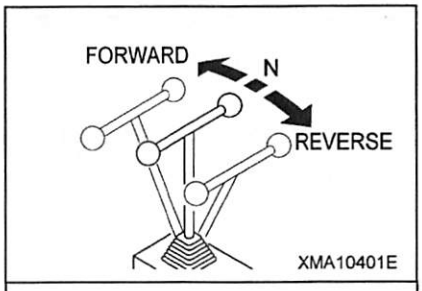

[2] TURNING (STEERING)

Keep the travel lever pushed to the front or rear and rotate the lever in the desired direction.

- Traveling forward left: Push the travel lever forward and rotate to left.
- Traveling forward right: Push the travel lever forward and rotate to right.
- Traveling in reverse left: Pull the travel lever back and rotate to right
- Traveling in reverse left: Pull the travel lever back and rotate to left

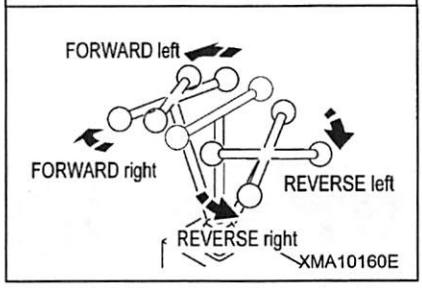

[3] GRADUAL TURNNING

Adjust the amount that the travel lever is rotated to adjust the angle when turning.

Rotate the travel lever slightly to make a gradual turn, and rotate it further to turn at a sharper angle.

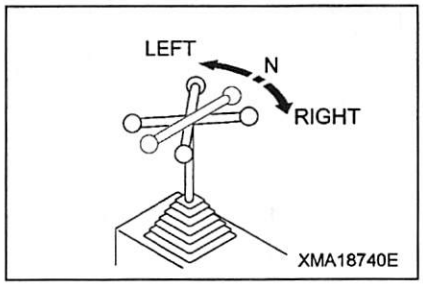

[4] SPIN TURN

Place the travel lever at the N position and rotate the travel lever.

[5] CHANGING TRAVEL SPEED

Adjust the amount that the travel lever is operated to the front or rear.

Operate the travel lever slightly from the N position to travel at low speed, and operate it further to increase the speed.

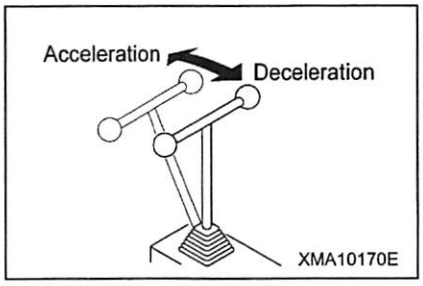

2.6 DUMP CONTROL LEVER

⚠ WARNING

- **Always stop the machine before operating the dump body to the dump position.**
- **Position a signalman to ensure safety in the surrounding area, and follow his signals when carrying out the dumping operation.**
- **Always operate the dump control lever slowly. If the dump body is suddenly stopped or it is allowed to hit the frame when it is lowered, it will cause failures and will also cause problems of safety in the surrounding area.**
- **When leaving the operator's compartment with the dump body raised, always lock the dump control lever. In addition, use the safety bar to prevent the dump body from coming down.**
  Even when the engine is stopped, it is possible to lower the dump body.

[1] DUMP CONTROL LEVER

Dump control lever (1) is used to raise and lower the dump body.

There are three operating positions: RAISE, HOLD, and LOWER.

- RAISE: The dump body is raised.
- HOLD: The dump body is stopped and held in position.
- LOWER: The dump body is lowered.

★When the control lever is released, it automatically returns to the HOLD position.

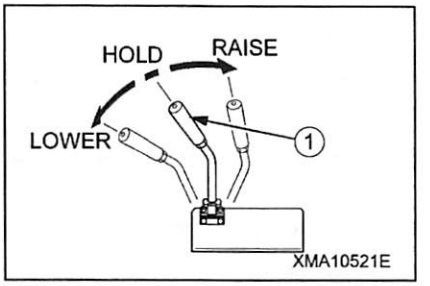

[2] DUMP CONTROL LEVER LOCK

Lever lock (2) is used to hold the dump control lever at the HOLD position.

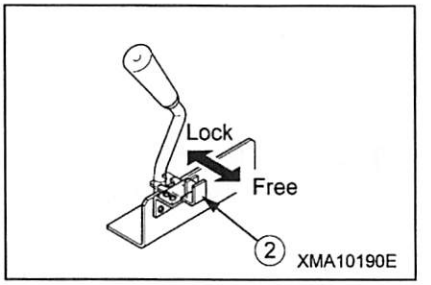

2.7 DUMP BODY SAFETY BAR

⚠ WARNING

- **If it is necessary to go under the dump body to carry out inspection and maintenance, always use the safety bar to prevent the dump body from coming down.**
- **When using the safety bar, check that the bar is fitted securely to the dump body holder.**
- **The safety bar is a safety device used during inspection and maintenance. Do not use the safety bar to support the dump body when replacing the dump cylinder, valve, hydraulic hoses, or other equipment. In such cases always support the dump body with a crane.**

Safety bar (1) is a device to ensure safety during operations, and is used when going under the dump body to carry out inspection and maintenance.

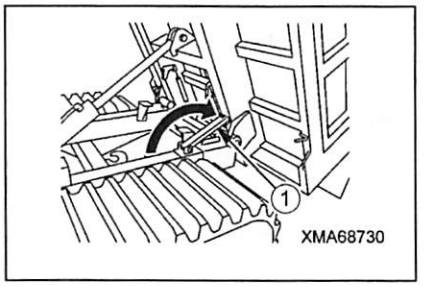

2.8 FUSE BOX IN CONTROL PANEL BOX

⚠ CAUTION

- **Always turn the starting switch to the OFF position before replacing the fuse.**
- **If the fuse is blown, always check for the cause in that circuit and carry out repairs before replacing the fuse.**
- **When replacing the fuse, always replace it with a fuse of the same capacity.**

NOTICE

Fuses are devices to prevent electrical equipment and wiring from burning out.
If a fuse is corroded or covered in white powder, always replace it.

1. Remove fuse box cover (1) under side of the control panel box, and check or replace the fuses inside it.

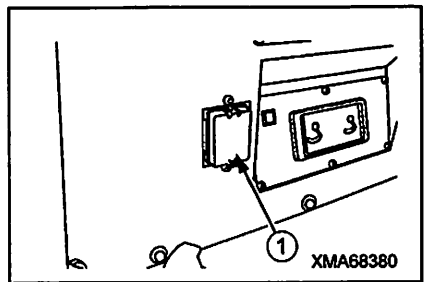

2. The fuses inside the fuse box are for the circuits shown in the table below.

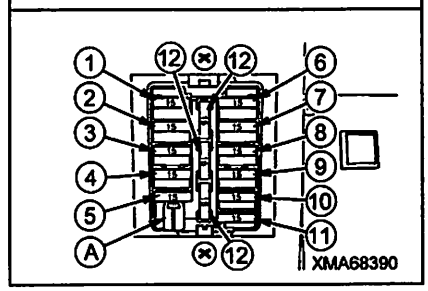

No.	Capacity	Name of circuit
1	15A	Tachometer
2	15A	Backup buzzer
3	15A	Turn signal lamp
4	15A	Head light, illumination, Horn
5	15A	Monitor panel lamp
6	15A	Slope alarm lamp
7	15A	Hi-Lo speed range selector switch
8	15A	Parking brake switch
9	15A	HST oil pressure switch
10	15A	Overrun monitor lamp
11	15A	Hourmeter
12	15A	Spare (3 pices)

★(A) in the figure indicates the clip used for replacing a fuse. Use this clip when replacing a fuse.

2.9 FUSES INSIDE WIRING HARNESS AT BATTERY

⚠ CAUTION

- **Always turn the starting switch to the OFF position before replacing the fuse.**
- **If the fuse has melted, always check the circuit to find the cause, and carry out repairs before replacing the fuse.**
- **When replacing the fuse, always replace it with a fuse of the same capacity.**

[1] SIGNS OF FAILURE

If these fuses show any of the following signs, carry out inspection and replacement.

- Slow blow fuse (1) (75A)
  If the power does not come on when the starting switch is turned to the ON position, carry out inspection and replacement.
- Slow blow fuse (2) (65A)
  If the battery charge lamp stays lighted up during operations, carry out inspection and replacement.

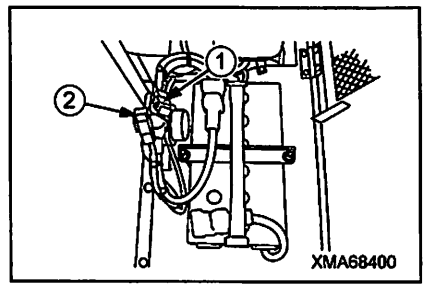

[2] METHOD OF REPLACEMENT

Replace these fuses as follows.

1. Open the engine bonnet. For details, see 2.12 ENGINE BONNET in the operation section.
2. Check each fuse in the wiring harness.
   For slow blow fuses (1) and (2), disconnect the fuse case connector, take out the fuse, and carry out inspection and replacement.

2.10 OPERATOR'S SEAT

⚠ CAUTION

- **Adjust the operator's seat before operations. Always adjust the operator's seat after it has been used by another operator.**
- **Adjust the operator's seat so that you can operate the travel lever easily with your back against the seat backrest.**
- **Never adjust the seat when traveling.**
- **Always lower the armrest before starting operation. The armrest is installed to prevent the danger of the operator falling from the operator's seat if the machine tips at an angle when traveling.**

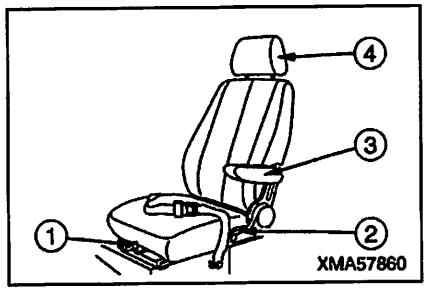

[1] ADJUSTMENT OF SEAT FRONT - REAR SLIDE

Sit in the seat, use front-rear slide lever (1) at the seat forward under right side to adjust.

1. While pulling lever (1) to the right, move the seat forward or backward to set it to a desired position.
2. Take your hand off lever (1), and press the seat slightly to lock the seat.

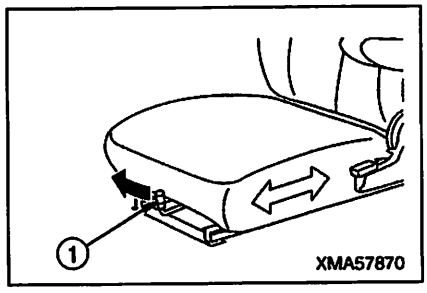

[2] ADJUSTMENT OF RECLINING ANGLE

Sit in the seat, use reclining adjustment lever (2) at the seat left back side to adjust the reclining angle.

1. While pulling lever (2) up, sit up straight to move your back away from the backrest. The backrest tilts forward.
2. While pulling lever (2) up, press your back against the backrest, and keep pressing until the backrest reaches your desired position.
3. Take your hand off lever (2), and press the backrest slightly to lock the seat.

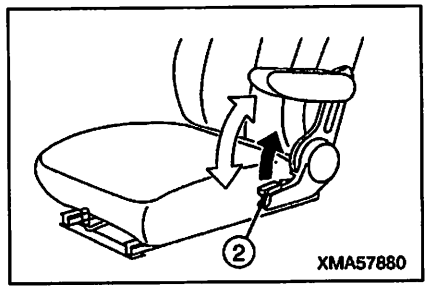

[3] ADJUSTMENT OF ARMREST

Armrest (3) moves up and down.

When getting in or out of the operator's compartment, raise the armrest.

When sitting in the operator's seat and carrying out operations, always lower the armrest.

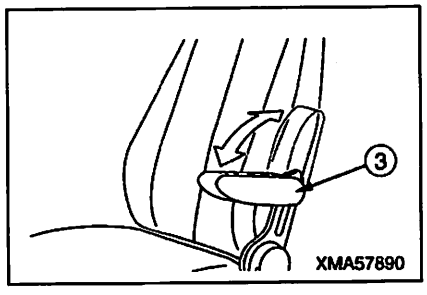

[4] ADJUSTMENT OF HEADREST

Headrest (4) can be adjusted up or down.

While pressing knob (5), move headrest (4) up or down.

To remove the headrest, move it up all the way.

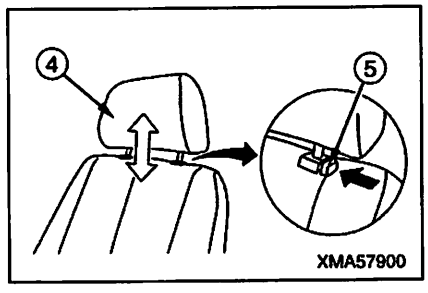

2.11 SEAT BELT

⚠ WARNING

- **Before fastening seat belt, always check that there is no abnormality in the belt mount or seat belt clamps. If there is any wear or damage, always replace the seat belt.**
- **Always adjust the seat belt and fasten it before starting operations.**
  The seat belt is installed to prevent the danger of the operator falling from the operator's seat if the machine tips at an angle when traveling.
- **Do not use the left or right seat belts when they are twisted.**

NOTICE

When the seat belt has been used for a long period, and the belt is damaged or starting to become fluffy, or if the clamps are broken or distorted, replace with a new seat belt.
Always replace the seat belt once every three years even if there is no visible sign of abnormality.

[1] FITTING AND RELEASING SEAT BELT

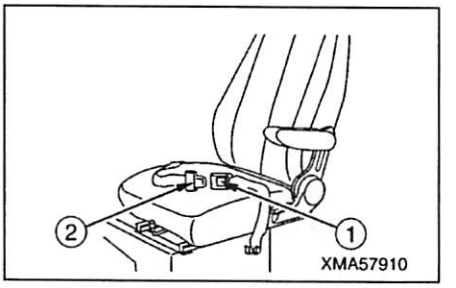

1. Sit in the operator's seat, push your back against the back of the seat, and adjust the operator's seat to a position where it is possible to operate the travel lever easily. For details, see 2.10 OPERATOR'S SEAT in the operation section
2. Hold seat belt buckle (1) and tongue (2) in your left and right hands, and insert tongue (2) into buckle (1).
3. Pull the seat belt to check that the tongue and buckle are locked securely.
4. When removing the seat belt, press the center of buckle (1) and pull out tongue (2).

[2] ADJUSTING SEAT BELT LENGTH

Adjust the seat belt so that it fits your body without twisting and so that the buckle is in the center at the front.

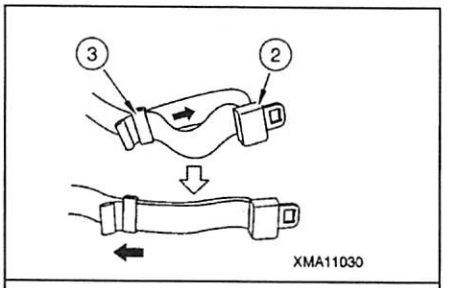

• TO MAKE SHORTER

Holder stopper (3) of the seat belt on the tongue side, then pull the seat belt at a point between tongue (2) and stopper (3) towards tongue (2).

This will move stopper (3) towards the seat mount and will shorten the seat belt.

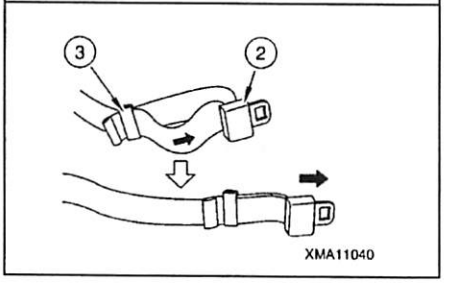

• TO MAKE LONGER

Holder stopper (3) of the seat belt on the tongue side, then pull the seat belt at a point between tongue (2) and stopper (3) towards the seat belt mount.

This will move stopper (3) towards the tongue (2) and will lengthen the seat belt.

2.12 ENGINE BONNET

When carrying out inspection and maintenance of the engine, radiator fins, oil cooler fins or battery, do as follows to open the bonnet.

1. Release the lock (1) with key, and open the engine bonnet (2) to forward.
2. After completion of inspection and maintenance, return the engine bonnet (2) to closed, and lock up the lock (1) securely with key.

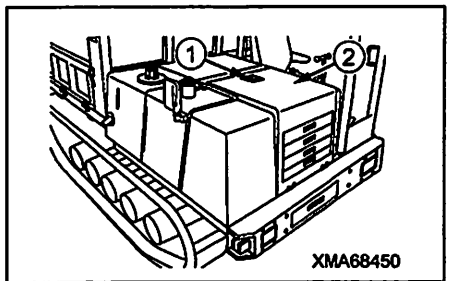

XMA68450

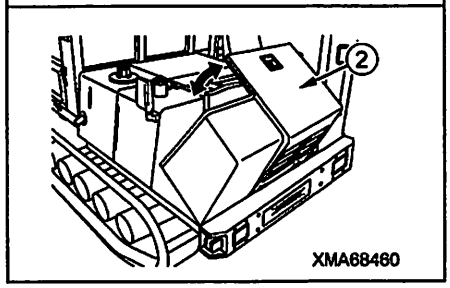

XMA68460

2.13 ENGINE UPPER AND REAR COVERS

When carrying out inspection and maintenance of the fuel system prim, fuel filter, water separator, muffler or hydraulic tank, do as follows to remove the engine covers.

1. Remove 9 bolts (2), then remove the engine rear cover (1).

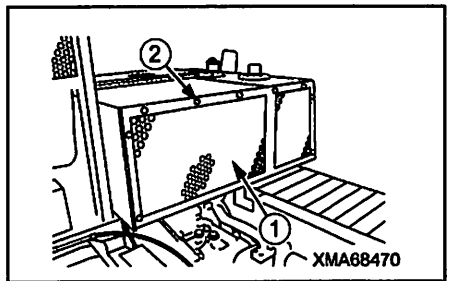

XMA68470

2. Remove 10 bolts (4), then remove the engine upper cover (3).
2. After completion of inspection and maintenance, set the engine upper cover (3) at the mounting position first, then tighten mounting bolts (4). Next set the engine rear cover (1) at the mounting position, then tighten mounting bolts (2).

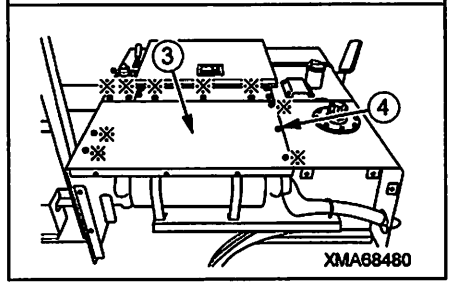

XMA68480

2.14 UNDERCOVER

When changing the coolant, do as follows to remove the undercover.

1. Set a garage jack under the center of undercover (1).
   ★Set a wooden block between the jack and the undercover to prevent damage to the undercover.
2. Remove 3 mounting bolts (2), then lower the jack and open undercover (1).
3. After completion of inspection and maintenance, put undercover (1) on the jack, set it at the mounting position under the machine, then tighten mounting bolts (2).

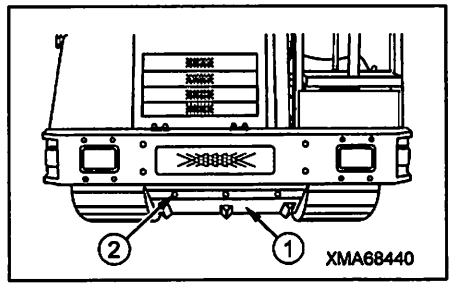

XMA68440

3. OPERATION

3.1 CHECK BEFORE STARTING ENGINE

[1] WALK-AROUND CHECK

⚠ WARNING

- **Check carefully that there are no dead leaves, waste paper, oil, grease, or other flammable materials around the battery or the muffler, or other parts of the engine which reach high temperatures. These flammable materials can cause fire.**
- **Check carefully that there is no leakage of oil or fuel from the hydraulic hoses or fuel hoses. If any cracks, deformation, or other abnormalities are found, repair them immediately. These problems will cause fire, abnormalities in travel, or problems with raising or lowering the dump body.**
- **Always use the handrails and steps when getting on or off the machine.**

Before starting the engine at the beginning of the day's work, look under and around the machine and check the following points.

- Check for dead leaves, waste paper, dust, oil, or grease at places which reach high temperatures.
- Check for loose or missing bolts, nuts, or connecting pins.
- Check for leakage of oil, fuel, or coolant.
- Check for hanging electrical wires or loose connections.

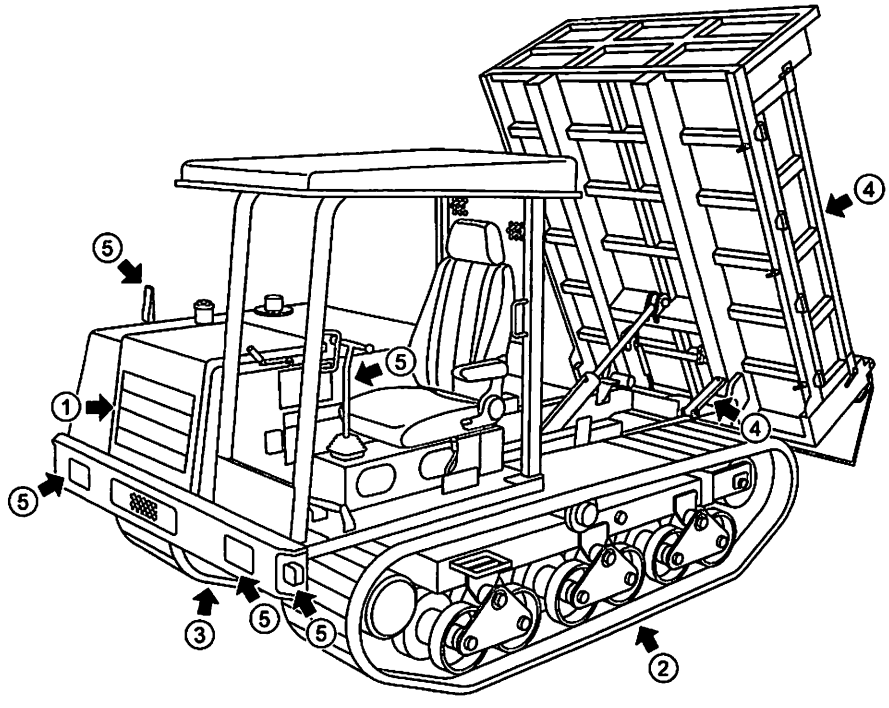

XMA68500

(1) Check around engine

Check for dead leaves, waste paper, dust, oil, grease, or other flammable materials, and check for leakage of fuel, oil, or coolant from the engine. Remove any flammable materials, and repair any abnormalities.

Check for hanging electrical wires, loose connections, or signs of burns around the starting motor, alternator, battery, or battery relay. Repair any abnormality.

Check the front surface of the radiator, oil cooler and inter cooler for dead leaves, waste paper, dust, or other flammable materials or materials which cause clogging. Remove any such materials.

(2) Check undercarriage (rubber crawler, track roller, carrier roller, sprocket, idler)

Check for any wear, breaks, or cracks. Check for any loose or missing nuts or bolts. Tighten if necessary and repair any abnormalities.

(3) Check under machine

Check the hydraulic tank and fuel tank for leakage, and check the ground under the machine for traces of oil, fuel, or coolant. If any signs of leakage are found, check for the source of the leakage and repair any abnormality.

Check for loose or missing nuts and bolts from the undercover and other parts, and tighten if necessary.

(4) Check dump body, safety bar

Check for any wear, breaks, or cracks. Check for any loose or missing nuts, bolts, or connecting pins. Tighten if necessary and repair any abnormalities.

Check for any leakage of oil from the hydraulic hoses or hydraulic cylinders, and repair any abnormality.

(5) Check mirrors, lamps, monitor panel

Check for any damage to the mirrors, lamps, meters, or monitor panel, and repair or replace if there is any abnormality.

[2] CHECKS BEFORE STARTING

Before starting the engine at the beginning of the day's work, carry out the following checks before starting and checks when required.

For details of the checks before starting, checks when required, and other maintenance, see "MAINTENANCE".

1. Checks when required

(1) Check, adjust rubber crawler tension
(2) Check rubber crawler for damage, wear
(3) Clean, replace air cleaner
(4) Clean inside of cooling system and change coolant
(5) Check, clean radiator fins, oil cooler fins
(6) Fuel system prim

2. Checks before starting

(1) Check coolant level, add water
(2) Check fuel level, add fuel
(3) Check, drain water from fuel/water separator
(4) Check engine lubricating oil level, add oil
(5) Check oil level in hydraulic tank, add oil
(6) Check dust indicator
(7) Check, adjust fan belt tension
(8) Check electrical wiring
(9) Check operation of switches, lamps, gauges
(10) Check operation of horn, alarm buzzer

[3] ADJUST OPERATOR'S SEAT

⚠ WARNING

- **Adjust the operator's seat before operations. Always adjust the operator's seat after it has been used by another operator.**
- **Adjust the operator's seat so that you can operate the travel lever easily with your back against the seat backrest.**
- **Never adjust the seat when traveling.**
- **Always lower the armrest and fasten the seat belt before starting operation.**
  The armrest and seat belt are installed to prevent the danger of the operator falling from the operator's seat if the machine tips at an angle when traveling.

For details of adjusting the operator's seat, see "2.10 OPERATOR'S SEAT".

3.2 OPERATIONS AND CHECKS BEFORE STARTING ENGINE

1. Check that the travel lever is at the N position.

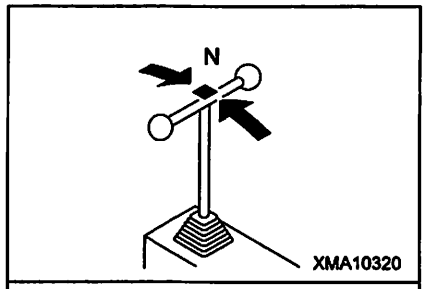

2. Check that the parking brake switch is at the ON (STOP) position.

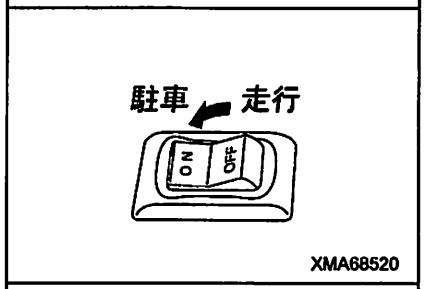

3. Check that the dump body is completely lowered and that dump control lever (1) is at the HOLD position.

4. Check that lock lever (2) of the dump control lever is at the LOCK position.

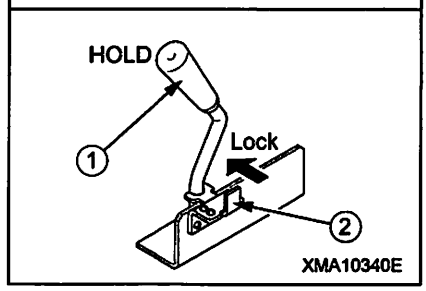

3.3 STARTING ENGINE

⚠ WARNING

Check that there are no persons or obstacles in the surrounding area, then sound the horn and start the engine.

NOTICE

- **When starting the engine, be sure to press the parking brake switch to set it to the ON (STOP) position.**
  The engine cannot be started without setting the parking brake switch to this ON (STOP) position.
- **Do not crank the starting motor continuously for more than 15 seconds.**
  If the engine does not start, wait for at least 2 minutes before trying to start again.

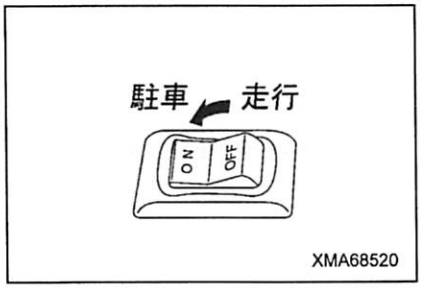

[1] NORMAL STARTING ENGINE

1. Pull the throttle lever back and set it to the low speed position.

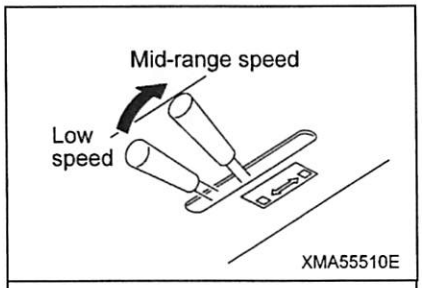

2. Insert the key in the starting switch, and turn it to the START position.

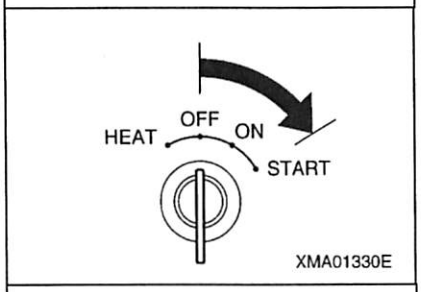

3. After the engine starts, release the key.
★The key will return automatically to the ON position.

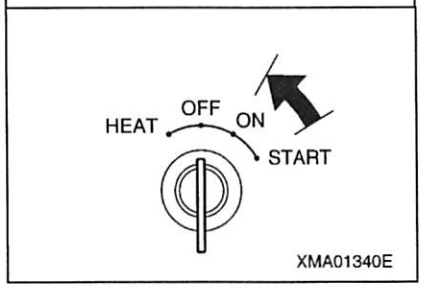

[2] STARTING ENGINE IN COLD WEATHER

When starting the engine in cold temperatures, do as follows.

1. Pull the throttle lever fully to the back and set to the high speed position.

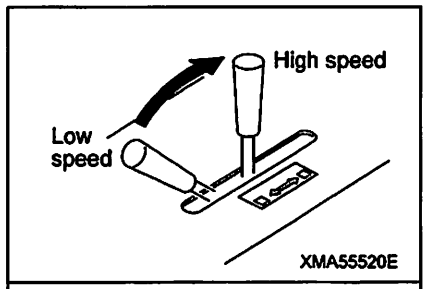

2. Insert the key in the starting switch, turn it to the HEAT position, check that the preheating indicator lamp on the control panel box lights up, and wait until it goes out.
   ★When the key is released, it will return automatically to the OFF position.

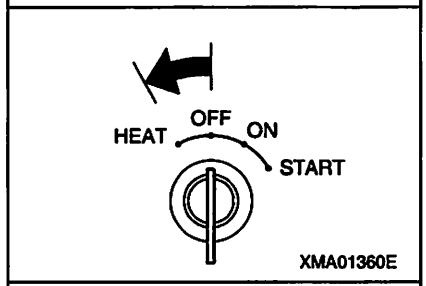

3. When the preheating indicator lamp goes out, turn the key to the START position and start the engine.

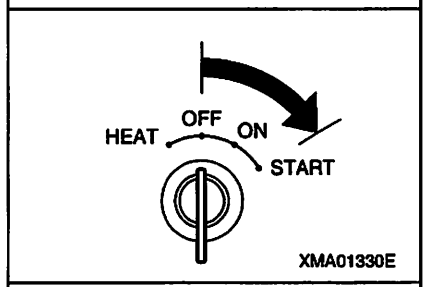

4. After the engine starts, release the key.
   ★The key will return automatically to the ON position.

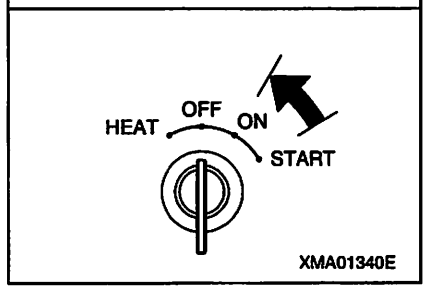

[3] AFTER STARTING (warming-up operation)

NOTICE

Run the engine under light load until the engine coolant temperature is within a green range. Do not suddenly accelerate the engine.

After the engine starts, carry out the warming-up operation as follows.

1. Push the throttle lever forward, set the engine to low speed, and run for approx. 5 minutes under no load.

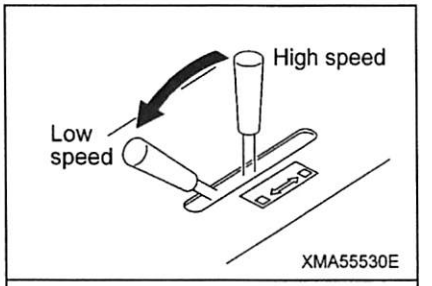

2. Pull the throttle lever back, raise the engine to a mid-range speed, and run for approx. 5 minutes under no load.

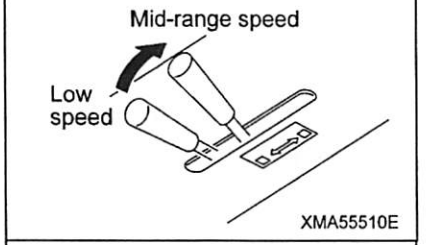

3. Operate dump control lever (1) to the RAISE position, raise the dump body to the maximum height, and run the engine in this condition for approx. 5 minutes.
   ★Keep dump control lever (1) at the RAISE position.
4. Keep dump control lever (1) at the RAISE position, turn the engine throttle lever to the right (clockwise) further to run the engine at high speed, and run the engine in this condition for 2 - 5 minutes.
   This operation warms up the hydraulic oil and makes the operation of the travel and dump body smooth.
5. Check that the gauges and lamps on the control panel box, the monitor on the monitor panel, parking brake buzzer, and backup buzzer work normally.
6. Check that there is no abnormality in the exhaust gas color, engine noise, or vibration.

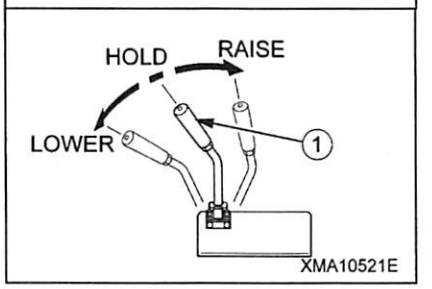

3.4 MOVING MACHINE OFF

⚠ WARNING

- **Check that there is no one in the area around the machine before starting. Check particularly carefully around the dump body at the rear of the machine.**
- **When starting the machine off, check that the surrounding area is safe, and sound the horn to inform people that you are starting.**
- **When starting the machine off, operate the travel lever gradually. The more the travel lever is operated, the faster the machine will travel. Do not start the machine off suddenly.**
- **When starting uphill on slopes, always start in the low speed range and run the engine at high speed. Keep the travel lever as close as possible to the N position.**
- **When traveling forward downhill, if the angle of the slope goes above a certain range, the SLOPE CAUTION lamp on the control panel box lights up and the slope alarm buzzer on the roof sound to warn the operator.**
  It is dangerous to start the machine off with the dump body loaded if the slope alarm buzzer sounds. Reduce the engine to low speed, set the travel lever close to the N position, and start the machine off carefully.

1. Pull the throttle lever back and run the engine at a mid-range speed.

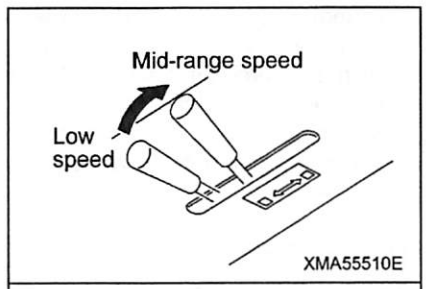

2. Set the parking brake switch to the OFF (RUN) position to release the parking brake.
   ★Check that the parking brake pilot lamp on the monitor panel goes out and that the parking brake buzzer stops sounding.

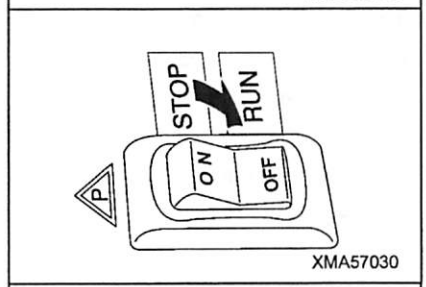

3. Operate the travel lever gradually and start the machine off slowly.
   ★When starting off in reverse, check that the backup buzzer sounds when the travel lever is operated to the REVERSE position.

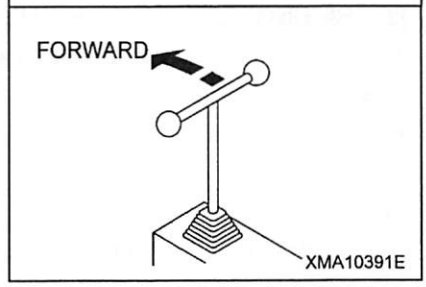

3.5 SHIFTING SPEED RANGE, CHANGING BETWEEN FORWARD AND REVERSE

⚠ WARNING

- **When traveling, select a travel speed to match the travel surface and ground condition.**
- **When traveling on a slope, be sure to set the travel speed range to the low speed range. Also, when traveling on a slope, travel straight forward.**
- **When going down a slope, always travel in the low speed range. Run the engine at low speed and operate the travel lever a maximum of half way from the N position. Traveling at excessive speed is dangerous and will cause overrunning.**
- **When traveling up a slope, always travel in the low speed range. Run the engine at the rated speed and keep the travel lever close to the N position. Always travel directly up the slope.**
- **When traveling forward downhill, if the angle of the slope goes above a certain range, the SLOPE CAUTION lamp on the control panel box lights up and the slope alarm buzzer on the roof sound to warn the operator. It is dangerous to start the machine off with the dump body loaded if the slope alarm buzzer sounds. Reduce the engine to low speed, set the travel lever close to the N position, and start the machine off carefully.**
- **If a dangerous state occurs by any possibility, and when it becomes necessary to stop the machine urgently, press the parking brake switch to set it to the ON (STOP) position or turn the engine starting switch to the OFF position to stop the engine.**
- **When switching between FORWARD and REVERSE, always stop the machine before shifting direction. If the direction of travel is shifted suddenly between FORWARD and REVERSE, it will cause failures such as reverse rotation of the engine.**
- **When switching the travel speed range, always stop the machine first before operating the switch.**

[1] CHANGING SPEED

The travel speed can be changed by changing the amount that the travel lever is operated.

- The closer the travel lever is to the N position, the lower the travel speed.
- The further the travel lever is from the N position, the higher the travel speed.

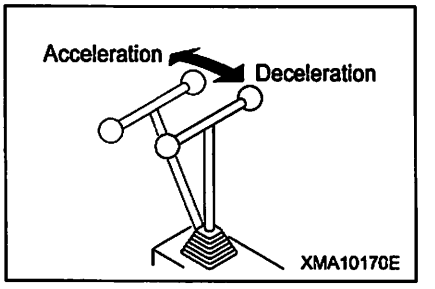

[2] SHIFTING BETWEEN FORWARD AND REVERSE

The direction of travel can be changed by changing the direction of operation of the travel lever.

- When the travel lever is pushed forward, the machine will travel forward.
- When the travel lever is pulled back, the machine will travel in reverse.

★Check that the backup buzzer sounds when the travel lever is operated to the REVERSE position.

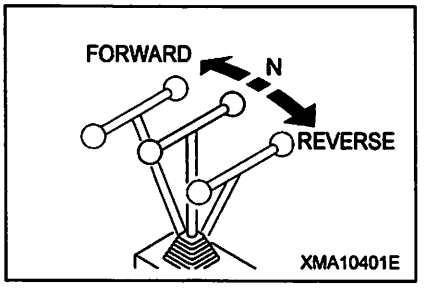

[3] SWITCHING BETWEEN HIGH AND LOW SPEED RANGES

The travel speed range is changed by operating the Hi-Lo speed range selector switch.

- When the switch is pressed, the mechanism inside the travel motor is switched and the machine changes to the high speed range.
  At the same time, the high-speed lamp on the monitor panel lights up to show that the machine is traveling in the high speed range.

- If the switch is pressed again, the mechanism inside the travel motor returns to its original position, and the machine travels in the low speed range.
  At the same time, the high-speed lamp on the monitor panel goes out to show that the machine is traveling in the low speed range.

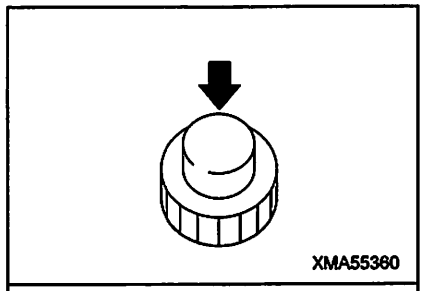

XMA55360

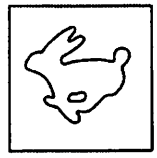

XMA06080

3.6 STEERING MACHINE

⚠ WARNING

- **Do not turn the machine sharply at high speed; do not carry spin turns unless necessary. This will damage the crawler and hydraulic equipment, and there is also danger that the machine may hit other objects.**
- **The machine may slip to the side if it is turned on a slope, so avoid turning on slopes as far as possible. Be particularly careful about turning on soft ground of clay ground.**
- **When traveling forward downhill, if the angle of the slope goes above a certain range, the SLOPE CAUTION lamp on the control panel box lights up and the slope alarm buzzer on the roof sound to warn the operator. It is dangerous to turn with the dump body loaded if the slope alarm buzzer sounds. Dump the load immediately to empty the dump body, then turn slowly.**
- **If a dangerous state occurs by any possibility, and when it becomes necessary to stop the machine urgently, press the parking brake switch to set it to the ON (STOP) position or turn the engine starting switch to the OFF position to stop the engine.**

[1] TURNING ANGLE

The turning angle is determined by the amount that the travel lever is rotated.

The more the travel lever is rotated, the sharper the turning angle becomes.

- When carrying out a gradual turn, push the travel lever to the front and rotate it slightly in the direction of the turn.
- To make a sharp turn, push the travel lever to the front and rotate the travel lever fully in the direction of the turn.

★To turn to the left when traveling forward, rotate the travel lever to the left. To turn to the right when traveling forward, rotate the travel lever to the right.

★To turn to the left when traveling in reverse, rotate the travel lever to the right. To turn to the right when traveling in reverse, rotate the travel lever to the left.

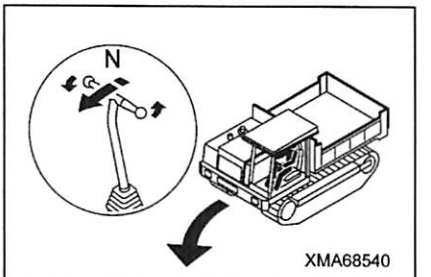

XMA68540

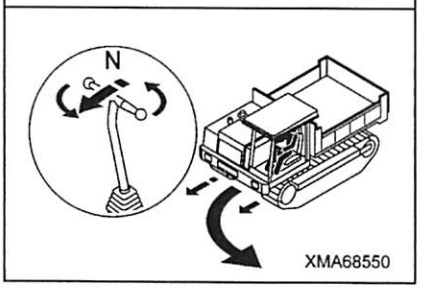

XMA68550

[2] SPIN TURN

Keep the travel lever at the N position and rotate the travel lever. The left and right rubber crawlers will rotate in opposite directions and the machine will carry out a spin turn.

The further the travel lever is rotated, the faster the speed of turning will be.

★To carry out a spin turn to the left, rotate the travel lever to the left.

★To carry out a spin turn to the right, rotate the travel lever to the right.

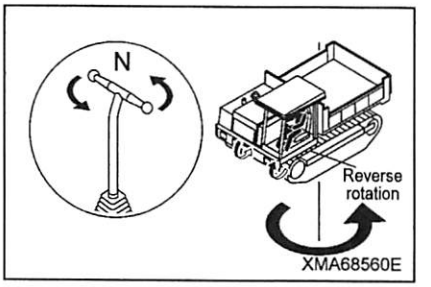

XMA68560E

3.7 STOPPING MACHINE

⚠ WARNING

- **Avoid stopping suddenly. Always leave room to spare when stopping.**
- **Never use the parking brake to stop the machine. Using the parking brake will cause the machine to stop suddenly and will also damage the machine.**
- **When stopping, do not return the travel lever past the N position. If the travel lever is moved past the N position, it will cause failures such as reverse rotation of the engine.**

Return the travel lever to the N position.
The hydraulic brake is automatically applied and the machine will stop.

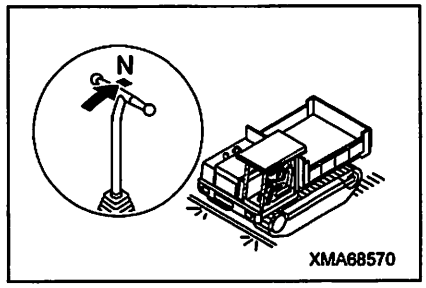

XMA68570

3.8 EMERGENCY STOPPING MACHINE

⚠ WARNING

If a dangerous state occurs by any possibility, and when it becomes necessary to stop the machine urgently, press the parking brake switch to set it to the ON (STOP) position or turn the engine starting switch to the OFF position to stop the engine.

There are following 2 methods when making an emergency stop of the machine.

- Set the parking brake switch to the ON (STOP) position to apply the parking brake.

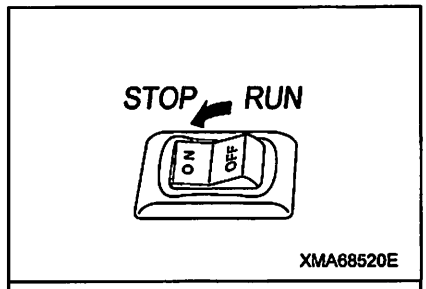

XMA68520E

- Turn back the starting switch key to the OFF position to stop the engine.

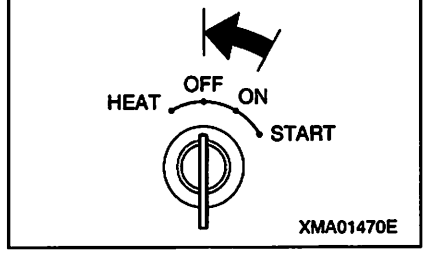

XMA01470E

3.9 PARKING MACHINE

⚠ WARNING

Choose firm, level ground to park the machine.
If the machine must be parked on the slope, apply the parking brake and block the tracks to prevent the machine from moving.

Set the parking brake switch to the ON (STOP) position to apply the parking brake.

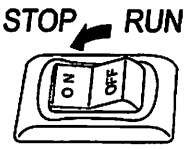

XMA68520E

★Check that the parking brake lamp on the monitor panel lights up and that the parking brake buzzer sounds.

XMA06090

3.10 STOPPING ENGINE

NOTICE

- **Do not stop the engine before it has properly cooled down. Stopping the machine before it cools down will shorten the service life of the engine.**
  Never stop the engine suddenly except in emergency.
- **If the engine has overheated, do not stop it suddenly. Run the engine at a mid-range speed and gradually cool it down before stopping the engine.**

1. Push the throttle lever to the front to reduce the engine speed and run the engine at idling for 5 minutes to cool the engine down.

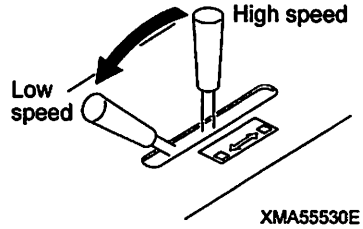

XMA55530E

2. Return the key in the starting switch to the OFF position.

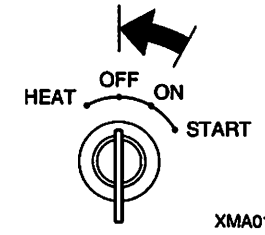

XMA01470E

3.11 CHECKS AFTER STOPPING ENGINE

- Carry out a walk-around check and check the undercarriage, dump body, and bodywork; check also for leakage of oil and water. If any abnormality is found, repair it.
- Fill the fuel tank with fuel.
- Remove any dead leaves, waste paper, or other flammable materials from around the engine that may cause fire.
- Remove any mud or snow stuck to the undercarriage or dump body.

3.12 LOCKING

To prevent vandalism, the following locations can be locked.

(1) Engine bonnet

(2) Fuel tank filler cap

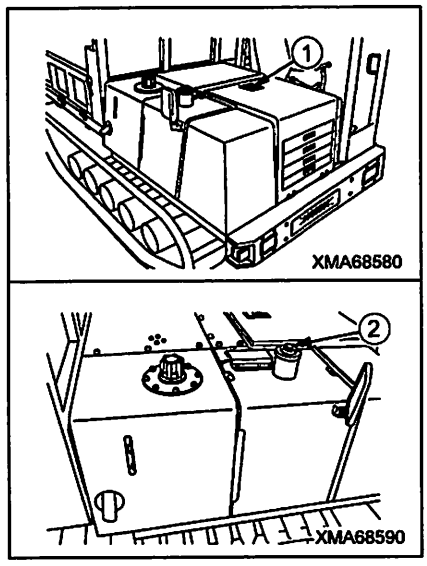

3.13 PRECAUTIONS WHEN TRAVELING

⚠ WARNING

Always follow these precautions when traveling. Failure to follow these precautions may lead to a serious injury or accident.

[1] PERMISSIBLE WATER DEPTH

When operating in water, do not let the bottom surface of the track frame.

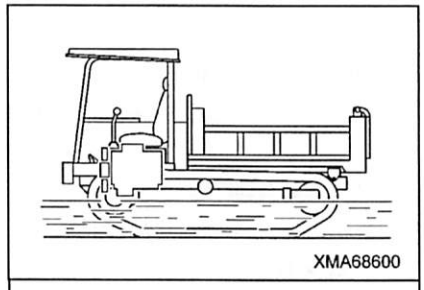

XMA68600

[2] USE OF PARKING BRAKE

When stopping the machine, return the travel lever to the N position. The hydraulic brake inside the HST is automatically applied to stop the machine. Never use the parking brake to stop the machine.

Using the parking brake will not only stop the machine suddenly, but will also cause failure of the travel motor.

Do not use the parking brake to stop the machine except when it is necessary to stop the machine suddenly in emergencies.

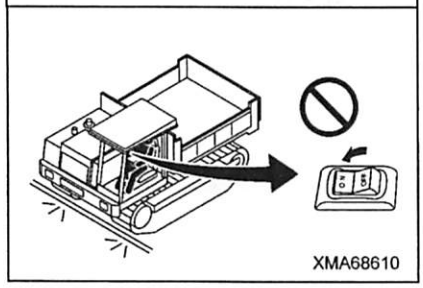

XMA68610

[3] PAY ATTENTION TO ANGLE ALARM BUZZER

If the angle exceeds a certain angle on slopes, the SLOPE CAUTION lamp on the control panel box lights up and the slope alarm buzzer on the roof sounds to warn the operator. It is dangerous to travel with the dump body loaded if the angle alarm buzzer sounds. Reduce the engine to low speed, set the travel lever close to the N position, and drive the machine carefully.

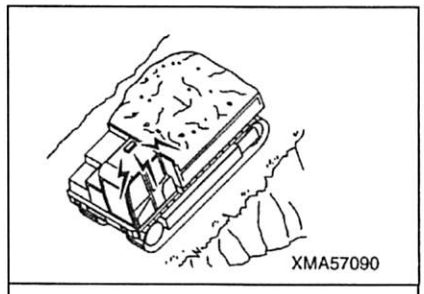

XMA57090

[4] PRECAUTIONS WHEN ENGINE STOPS ON SLOPES

If the engine stops on a slope, do as follows.

1. Return the travel lever to the N position.
2. Set the parking brake switch to the ON (STOP) position.
   ★Check that the parking brake lamp lights up.
3. Start the engine again.

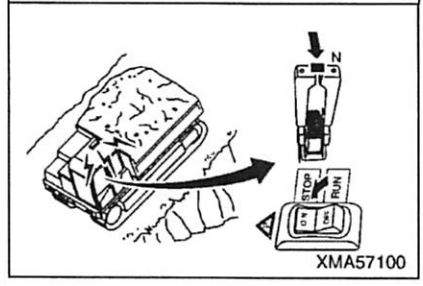

XMA57100

[5] PRECAUTIONS WITH FUEL LEVEL ON SLOPES

If the fuel level in the fuel tank is low and the machine is on a slope or there is swaying, the engine may suck in air, which may cause the engine to stop.

Always maintain a sufficient level of fuel in the fuel tank.

[6] PRECAUTIONS FOR OIL LEVELS ON SLOPES

When traveling or carrying out operations on steep slopes, check the oil level in the hydraulic tank and engine, and add oil to the high level.

This will prevent failure caused by lack of oil.

4. HANDLING DUMP BODY

4.1 OPERATING DUMP BODY

⚠ WARNING

- **Always stop the machine before operating the dump body to the dump position.**
- **Position a signalman to ensure safety in the surrounding area, and follow his signals when carrying out the dumping operation.**
- **Always operate the dump control lever slowly. If the dump body is suddenly stopped or it is allowed to hit the frame when it is lowered, it will cause failures and will also cause problems of safety in the surrounding area.**
- **When leaving the operator's compartment with the dump body raised, always lock the dump control lever. In addition, use the safety bar to prevent the dump body from coming down.**
  Even when the engine is stopped, it is possible to lower the dump body.

Operate the dump body as follows.

★The further the dump control lever is operated, the faster the dump body will move.

★When the dump control lever is released, it automatically returns to the HOLD position.

1. Stop the machine completely. For details, see "3.7 STOPPING MACHINE".
2. Pull the throttle lever back and raise the engine speed sufficiently.
3. Pull the dump control lever (1) up. The dump body will rise.
   ★When the dump body comes near to the max. height, push the dump control lever down to reduce the speed of the dump body.
4. Push the dump control lever (1) down. The dump body will go down.
   ★When the dump body comes near to the frame, pull the dump control lever up to reduce the speed of the dump body.

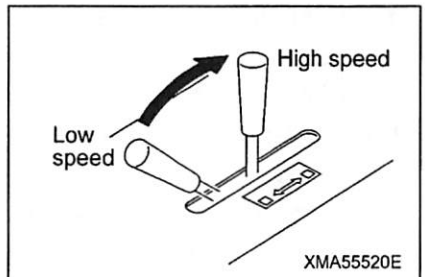

XMA55520E

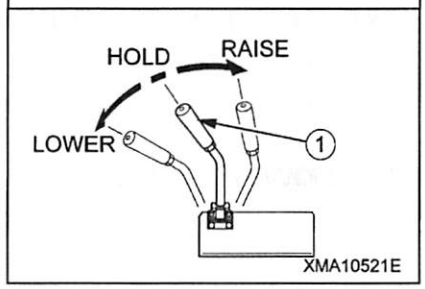

XMA10521E

4.2 LOCKING DUMP CONTROL LEVER

⚠ WARNING

If you leave the operator's seat with the dump track raised, always lock the dump control lever.
The dump body can be lowered even when the engine is stopped.

Lock the dump control lever as follows.

1. Release dump control lever (1) and set it to the HOLD position.

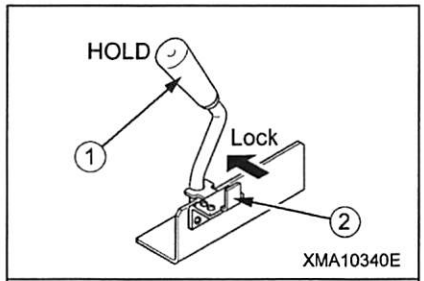

XMA10340E

2. Push lock lever (2) to inside. This will lock dump control lever (1).
3. To release the lock from the dump control lever, pull lock lever (2) to the outside. This will release the lock from dump control lever (1).

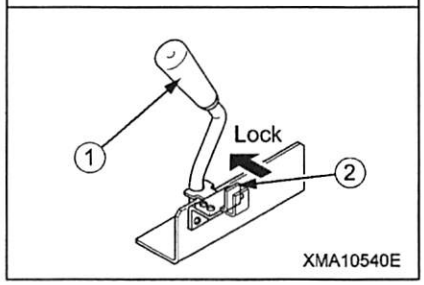

XMA10540E

4.3 OPERATING SAFETY BAR

⚠ WARNING

- **If it is necessary to go under the dump body to carry out inspection and maintenance, always use the safety bar to prevent the dump body from coming down.**
- **When using the safety bar, check that the bar is fitted securely to the dump body holder.**
- **The safety bar is a safety device used during inspection and maintenance. Do not use the safety bar to support the dump body when replacing the dump cylinder, valve, hydraulic hoses, or other equipment. In such cases always support the dump body with a crane.**

NOTICE

When setting the safety bar in position, never start the engine and operate the dump control lever to the LOWER position.
If this is done, the safety bar will hit the dump body and may break.

[1] INSTALLING SAFETY BAR

1. Raise the dump body to at least 45 degrees. For details, see "4.1 OPERATING DUMP BODY".
2. Raise safety bar (1) and set it in holder (2) in the bottom surface of the dump body.
3. Stop the engine and push the dump control lever down. The dump body will go down under its own weight.
   ★If the dump body does not go down under it own weight, start the engine and operate the dump control lever to lower it to a point where the dump body and safety bar still do not come into contact.

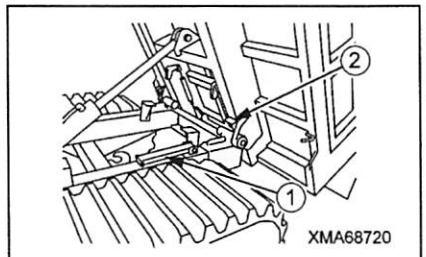

XMA68720

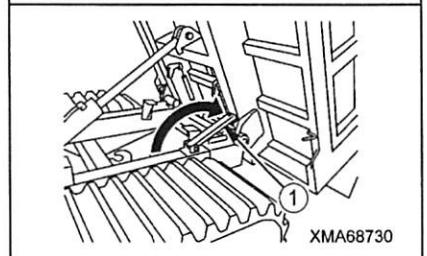

XMA68730

[2] REMOVING SAFETY BAR

1. Raise the dump body fully. For details, see "4.1 OPERATING DUMP BODY".
2. Return safety bar (1) to the fixed position on top of the frame.

4.4 PRECAUTIONS DURING OPERATION

⚠ WARNING

Always follow these precautions when carrying out operations.
Failure to follow these precautions may lead to a serious injury or accident.

[1] PRECAUTIONS FOR JOBSITES

- As far as possible, select firm, level ground.
  When working on slopes or extremely uneven ground, the change in the center of gravity when the dump is operated may cause the machine tip over.

- As far as possible, avoid the edge of cliffs or ground which may collapse.
  If work must be carried out in such places, set up blocks to prevent the machine from going near the edge or near retaining walls, or position a signalman and take other necessary steps for ensuring safety.

- When dumping a load from a high point, always position a signalman and follow the signals.
  The signalman must always check the safety of the dumping point carefully.

[2] PRECAUTIONS FOR LOAD

- Do not overload the machine.
  Do not fit side racks or plates, or make other modifications to extend the size of the dump body to increase the load.

- When loading the dump body, always spread the load uniformly.
  Loading the dump body unevenly will cause instability and may cause the machine to tip over.

- Be careful not to let the loading bucket or crane hook hit the dump body or flaps.

- When loading large rocks, first load the dump body with fine soil, then load the rocks on top of that.

- When handling long objects, such as logs or steel beams, load carefully and pay careful consideration to the center of gravity so that the load does not collapse or sway excessively during hauling operations.
  Tie down such loads securely with rope.
  If necessary, use blocks and take steps to prevent the rope from slipping.

- When loading stacks of U-shaped ditch liners or concrete blocks, lay a steel sheet and secure with rope, and take other steps to prevent the load from slipping.

5. HANDLING RUBBER CRAWLER

5.1 FEATURES OF RUBBER CRAWLER

The properties of the material used for the rubber crawlers gives it many advantages, such as low vibration, high drawbar pull, and ease of handling.

Make sure that you fully understand the advantages of rubber crawlers, and follow the content of "5.2 PROHIBITED OPERATIONS FOR RUBBER CRAWLER" and "5.3 PRECAUTIONS WHEN USING RUBBER CRAWLER" to extend the service life of the rubber crawlers and to realize the maximum advantages of the rubber crawler.

5.2 PROHIBITED OPERATIONS FOR RUBBER CRAWLER

- Turning operations or other operations on hard rocky ground, extremely rough rockbed, in places with many tree stumps, on steel rods or steel scrap, or places with many sharp objects, or on concrete surfaces will cause damage to the rubber shoe.

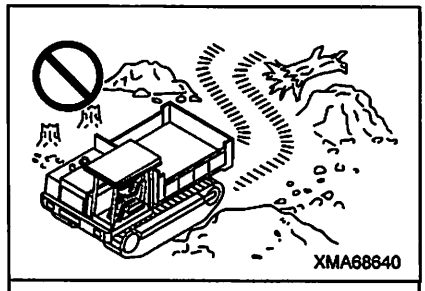
XMA68640

- On riverbeds or other jobsites where there are large numbers of rocks of different sizes, the rocks will get caught in the rubber shoe and damage the shoe or cause it to come off the roller.

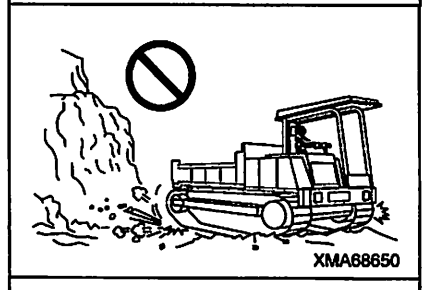
XMA68650

- Do not let oil, fuel, or chemical solvent get on the rubber shoe. Do not travel in places where there is oil on the road surface.

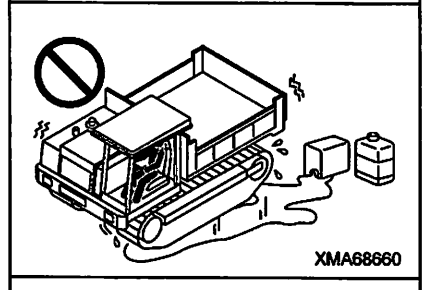
XMA68660

- Do not let the machine enter any place where the ground is at high temperature, such as on asphalt or steel plates that have been left in the sun or in places where there have been fires.

- When putting the machine in long-term storage (3 months or more), store the machine indoors where it is out of direct sunlight and rain.

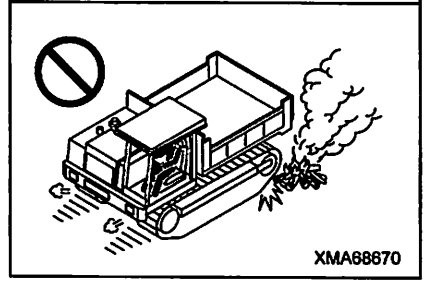
XMA68670

5.3 PRECAUTIONS WHEN USING RUBBER CRAWLER

⚠ WARNING

Always follow these precautions when using rubber crawlers. Failure to follow these precautions may lead to a serious injury or accident.

- Do not make sharp turns on concrete surfaces.
- Do not operate the machine in such away that the rubber track scrapes against concrete walls.
- Sudden changes of direction will cause damage and premature wear to the rubber shoes, so avoid sudden turns as far as possible.

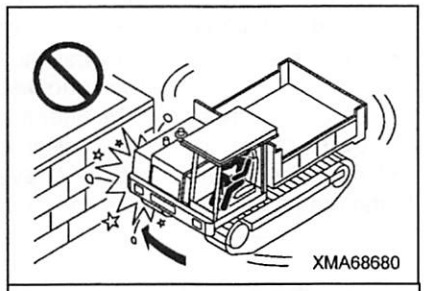
XMA68680

- Avoid traveling and turning in places where there is a large ridge. When traveling over a ridge, approach the ridge at a right angle.

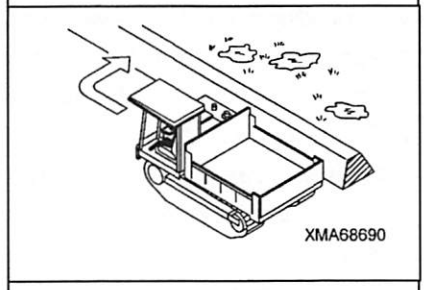
XMA68690

- As far as possible, avoid handling loads that produce oil when crushed (soy beans, corn, vegetables, etc.). If the machine is used for handling such products, be sure to wash the track thoroughly after use.
- When handling loads such as salt, ammonium sulphate, potassium chloride, potassium sulphate, or phosphates, be sure to wash the track thoroughly after use.

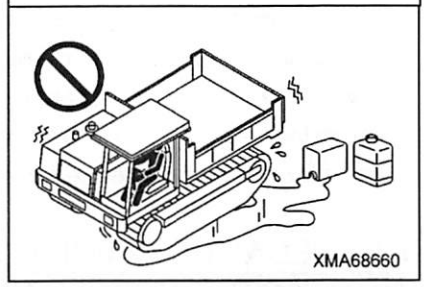
XMA68660

- On snow or frozen road surfaces, the rubber shoe will slip very easily. Be careful also of slipping when traveling or operating on slopes.

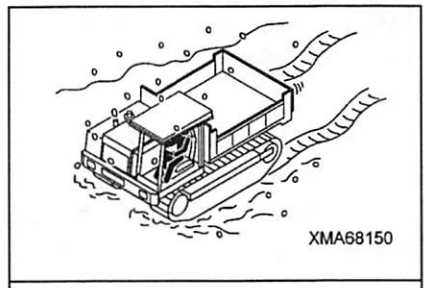
XMA68150

- To prevent the rubber shoe from coming off, always check that the tension is correct.
  If the tension is too loose, the rubber shoe will come off and there will be abnormal wear of the steel core and sprocket.
  If the tension is too tight, the travel speed will be reduced and there will be premature wear or damage to the undercarriage.

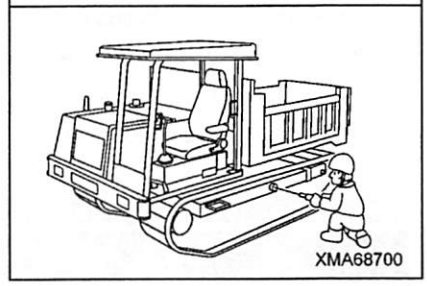
XMA68700

6. TRANSPORTATION

6.1 LOADING, UNLOADING WORK

⚠ WARNING

- **Make sure the ramp has sufficient width, length and thickness to enable the machine to be safely loaded and unloaded. If the ramp sags appreciably, reinforce it with blocks, etc.**
- **When loading and unloading the machine, park the trailer on a flat firm roadbed. Keep a fairly long distance between the road shoulder and the machine.**
- **Remove the mud from the undercarriage to prevent the machine from slipping to the side on slopes. Be sure the ramp surface is clean and free of grease, oil, ice and loosen materials.**
- **Never change the direction of travel when on the ramps. If it is necessary to change direction, drive off the ramps and correct the direction, then drive on to the ramps again.**

When loading or unloading, always use ramps or a platform and carry out the operations as follows.

1. Apply the brake securely to the truck or trailer and put blocks under the tires to prevent the machine from moving.
2. Set the ramps so that the center of the machine is aligned with the truck or trailer, and fix securely in position.
   ★Check that the left and right ramps are at the same height.
3. Align the machine with the ramps, and drive up or down the ramps slowly to the load or unload the machine.
4. To prevent the machine from moving during transportation, put wooden blocks under the front and rear of the rubber crawler and secure the machine with chains or wire rope.
   Be particularly careful to secure it so that it cannot slip to the side.

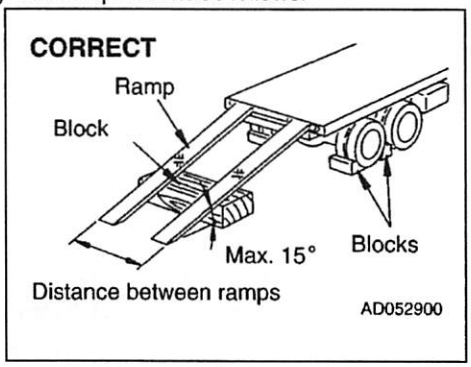

6.2 PRECAUTIONS FOR LOADING

⚠ WARNING

When loading and unloading the machine, park the trailer on a flat firm roadbed. Keep a fairly long distance between the road shoulder and the machine.

After loading the specified position, secure the machine as follows.

1. Lower the dump body slowly.
2. Push the parking brake switch in to apply the parking brake.
3. Return the engine throttle lever to the low-speed position, turn the starting switch to the OFF position and stop the engine. Remove the starting key.
4. When transporting the machine, place rectangular timber underneath the front and rear track shoes to prevent the machine from moving about. Also, hold it down with chains or rope. Be particularly careful to ensure that the machine does not slip sideways.

6.3 PRECAUTIONS FOR TRANSPORTATION

⚠ WARNING

Determine the route for transporting the machine by taking into account the width, height and weight of the machine.

Obey all state and local laws governing the weight, width and length of a load. Observe all regulations governing wide loads.

7. COLD WEATHER OPERATION

7.1 PRECAUTIONS FOR LOW TEMPERATURE

If the temperature becomes low, it becomes difficult to start the engine, and the coolant may freeze, so do as follows.

[1] FUEL AND LUBRICANTS

Change to fuel and oil with low viscosity for all components.

For details of the specified viscosity, see "MAINTENANCE 3. USE OF FUEL, COOLANT AND LUBRICANTS ACCORDING TO AMBIENT TEMPERATURE".

[2] COOLANT MIXTURE RATIO IN COOLING WATER

⚠ WARNING

Antifreeze is flammable, so keep it away from flames. Never smoke when handling antifreeze.
Antifreeze is added to the coolant to prevent the water from freezing when the machine is not being used.

NOTICE

Never use methanol, ethanol, or propanol-based antifreeze.

To prevent engine overheating, rust, corrosion or freezing in the cooling system, use a mixture of long life coolant with tap water for engine cooling water.

The coolant serves anti-rust, anti-corrosion, and antifreeze. It should be used year around.

The coolant mixture ratio must be 30% or higher to ensure anti-rust and anti-corrosion properties.

[COOLANT MIXTURE RATIO]

Use the following table as a guide. The table shows examples when the amount of cooling water is "6.5 liters (1.72 US gal) [1.43 UK gal]".

Item	Unit				
Min. temperature	Deg C	-10	-15	-20	-25
	Deg F	14	5	-4	-13
Amount of coolant	Litter	2.0	2.0	2.3	2.6
	US gal	0.53	0.53	0.61	0.69
	UK gal	0.44	0.44	0.51	0.57
Amount of cooling water	Litter	4.5	4.5	4.2	3.9
	US gal	1.19	1.19	1.11	1.03
	UK gal	0.99	0.99	0.92	0.86
Coolant mixture ratio	%	30	30	35	40

When the vehicle is delivered, the cooling water is mixed with 30% long life coolant of the brand as shown below.

★COOLANT GREEN (ENEOS): Non-amine type

[3] BATTERY

⚠ DANGER

- **To avoid gas explosions, do not bring fire or sparks near the battery.**
- **Battery electrolyte is dangerous. If it gets in your eyes or on your skin, wash it off with large amounts of water, and consult a doctor.**

When the ambient temperature drops, the capacity of the battery will also drop. If the battery charge ratio is low, the battery electrolyte may freeze. Maintain the battery charge as close as possible to 100%, and insulate it against cold temperature so that the machine can be started easily the next morning.

Measure the specific gravity and calculate the rate of charge from the following conversion table.

Rated of charge (%)	Temp. of battery electrolyte [deg C (deg F)]			
	20 (68)	0 (32)	-10 (14)	-20 (-4)
100	1.28	1.29	1.30	1.31
90	1.26	1.27	1.28	1.29
80	1.24	1.25	1.26	1.27
75	1.23	1.24	1.25	1.26

7.2 AFTER COMPLETION OF WORK

To prevent mud, water, or the undercarriage from freezing and making it impossible for the machine to move on the following morning, always observe the following precautions.

- Mud and water on the machine body should be completely removed. This is to prevent damage to the seal caused by mud or dirt getting inside the seal with frozen drops of water.
- Park the machine on concrete or hard ground. If this is impossible, park the machine on wooden boards.
- Open the drain valve and drain any water collected in the fuel system to prevent it from freezing.
- As the battery capacity drops markedly in low temperatures, cover the battery or remove it from the machine, keep it in a warm place, and install it again the next morning.
- If electrolyte level is found low, add distilled water in the morning before beginning work. Do not add the water after day's work so as to prevent fluid in the battery from freezing in the night.

7.3 AFTER COLD WEATHER

When season changes and the weather becomes warmer, do as follows.

- Replace the fuel and oil for all parts with oil of the viscosity specified.
  For details, see "MAINTENACE 3. USE OF FUEL, COOLANT AND LUBRICANTS ACCORDING TO AMBIENT TEMPERATURE".
- If for any reason permanent antifreeze cannot be used, and an ethyl glycol base antifreeze (winter, one season type) is used instead, or if no antifreeze is used, drain the cooling system completely, then clean out the inside of the cooling system thoroughly, and fill with fresh water.

8. LONG-TERM STORAGE

8.1 BEFORE STORAGE

When putting the machine in storage for more than one month, do as follows.

- After every part is washed and dried, the machine shall be housed in a dry building. Never leave it outdoors.
  In case it is indispensable to leave it outdoors, park the machine on the flat ground and cover it with canvas etc.
- Completely fill the fuel tank, lubricate and change the oil before storage.
- Apply a thin coat of grease to metal surface of the hydraulic piston rods and the idler adjusting rods.
- Disconnect the negative terminals of the battery and cover it, or remove it from the machine and store it separately.
- If the temperature will go below 0 deg C, add anti-freeze to the cooling water.
  When not using anti-freeze, drain all the cooling water, and put a "No coolant" sign in the operator's compartment.

8.2 PRECAUTIONS DURING STORAGE

⚠ WARNING

If warming-up operation must be carried out inside a building, open the windows and doors to ensure good ventilation and prevent gas poisoning.

- When the machine is in long-term storage, start the engine once a month and carry out the warming-up operation thoroughly.
  In addition, move the machine for a short distance, and carry out the raise and lower operation thoroughly for the dump body.

★If the cooling water has been drained from the machine, always fill with cooling water before starting the engine.

★Before operating the dump body, wipe off the coat of grease from the piston rods of the hydraulic cylinders.

8.3 PRECAUTIONS AFTER STORAGE

Carry out the following procedure when using the machine after long-term storage.

- Wipe off the coat of grease from the piston rods of the hydraulic cylinders.
- Remove the drain plugs from the hydraulic tank, fuel tank, engine oil pan, and travel motors, and drain the water.
- Drain the water from the engine oil filter, fuel filter, and hydraulic line filter.
- Carry out the checks before starting and warm up the machine thoroughly, then check all parts of the machine carefully.

9. HANDLING BATTERY

When handling batteries, always do as follows.

⚠ DANGER

- **Before working with the battery, stop the engine and turn the key in the starting switch to the OFF position.**
- **When working with the battery, always wear safety glasses.**
- **Batteries generate hydrogen gas, so there is danger of explosion.**
  Do not smoke, use a lighter, or create any spark near the battery.
- **Battery electrolyte contains sulphuric acid. If you get acid on yourself, immediately flush the area with large amounts of water. If acid gets into your eyes, flush them immediately with large amounts of fresh water, then go to a doctor for treatment.**
- **When removing the battery, first disconnect the negative (-) terminal of the cable from the ground.**
  When installing, install the positive (+) terminal first.
- **If a tool touches the cable connecting the positive terminal and the chassis, there is danger that it will cause sparks. Do not carry tools in your breast pocket.**
- **Defective contact caused by loose battery terminals can generate sparks and lead to an explosion.**
  Tighten the battery terminals securely.

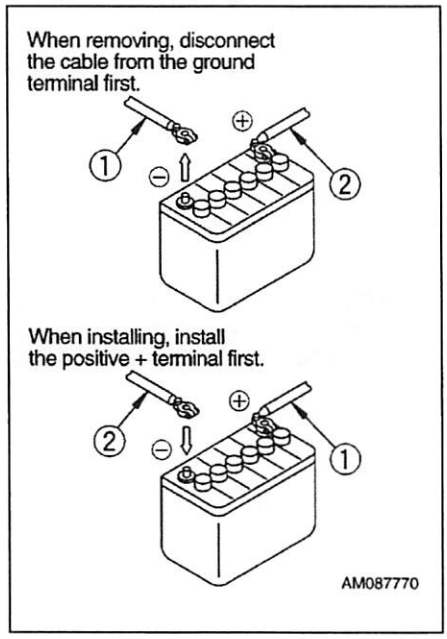

9.1 PRECAUTIONS WHEN HANDLING BATTERY

- Always be careful not to let the battery become discharged.
  Do not wait for the battery to become discharged before recharging it; measure the specific gravity of the battery electrolyte beforehand and charge the battery if necessary.
  Always keeping the battery in good condition will extend the life of the battery.
- When operating the machine in high temperatures, check the level of the battery electrolyte at shorter intervals than specified for periodic inspection and maintenance.
- When working in low temperatures, the capacity of the battery will drop considerably, so maintain the battery charge as close as possible to 100%, and insulate it against cold temperatures so that the machine can be started easily the next morning.
  When adding distilled water, to prevent the electrolyte from freezing, always add the distilled water immediately before starting operations on the following morning.

9.2 REMOVAL AND INSTALLATION OF BATTERY

The battery is installed in front of the fuel tank on the front right side of the machine.

[1] REMOVAL

1. Open the engine bonnet. For details, see "2.12 ENGINE BONNET".
2. Remove 2 locknuts (1) (left and right: x 2), then remove plate (2).
3. Disconnect the battery cable from negative (-) terminal (4) for the ground, then disconnect at positive (+) terminal end (5).
4. Remove the battery (3).

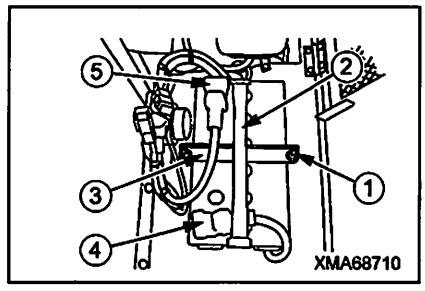

[2] INSTALLATION

Install the batteries in the reverse order to removal.

★When connecting the battery cables, always install the negative (-) terminal (4) at the ground end last.

9.3 PRECAUTIONS WHEN CHARGING BATTERY

If the battery becomes discharged or the battery charge is low, charge the battery.

To charge the battery when it is still mounted on the machine, do as follows.

⚠ WARNING

It is dangerous if the temperature of the battery electrolyte exceeds 45 deg C during charging, so stop charging and wait for the temperature to go down.

- Disconnect the wiring from the battery terminals before charging.
  There is danger of abnormal voltage being applied to the alternator and damaging it.
  When disconnecting the wiring, always disconnect the negative (-) terminal wiring first; and when connecting the wiring, always connect the negative (-) terminal wiring last.

- During charging, remove all the plugs from the battery cells to allow any gas to escape.

- When the charging is completed, stop the charging immediately.
  If the battery is overcharged, overheating of the battery will cause damage to the battery.

★Reference: Measure the specific gravity and calculate the rate of charge from the following conversion table.

Rated of charge (%)	Temp. of battery electrolyte [deg C (deg F)]			
	20 (68)	0 (32)	-10 (14)	-20 (-4)
100	1.28	1.29	1.30	1.31
90	1.26	1.27	1.28	1.29
80	1.24	1.25	1.26	1.27
75	1.23	1.24	1.25	1.26

9.4 STARTING ENGINE WITH BOOSTER CABLE

If the battery is discharged and booster cables are used to start the engine, do as follows

⚠ DANGER

- **Be careful not to let the normal machine and problem machine contact each other.**
- **When connecting the cables, never let the positive (+) and negative (-) terminals contact each other.**
- **Make sure that there is no mistake in the booster cable connection.**
  When the final connection is made to the negative (-) terminal, sparks will be generated, so do not connect to the negative (-) terminal of the battery on the problem machine. Connect to the engine block.
- **When starting the engine with a booster cable, always wear safety glasses.**

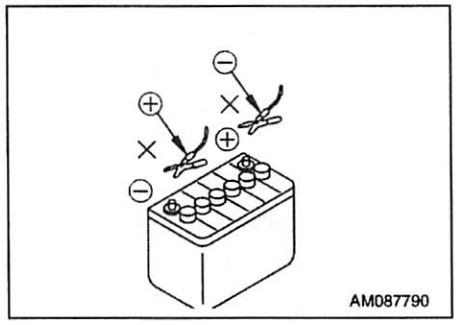

NOTICE

- **The size of the booster cable and clip should be suitable for the battery capacity. Check that they are not corroded or damaged.**
- **The battery on the normal machine must be the same capacity as that on the problem machine.**

[1] CONNECTING THE BOOSTER CABLES

★The numbers in the diagram on the right show the order for connecting the cables.

1. Make sure that the starting switches of the normal machine and problem machine are both at the OFF position.
2. Connect the clips at the ends of booster cable **A** to the positive (+) terminal of the problem machine and the normal machine.
3. Connect one clip of booster cable **B** to the negative (-) terminal of the normal machine.
4. Connect the other clip of booster cable **B** to the engine block of the problem machine.
5. Start the problem machine.

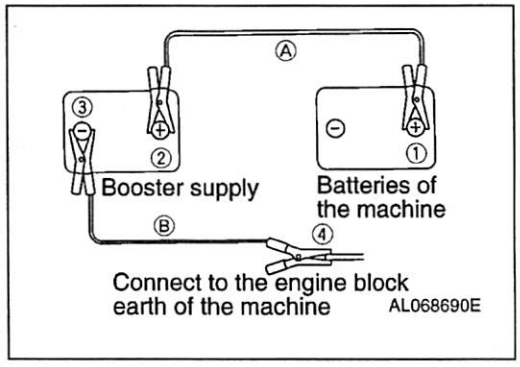

[2] DISCONNECTING THE BOOSTER CABLE

★The numbers in the diagram on the right show the order for connecting the cables.

When the engine on the problem machine starts, remove the cables in the reverse order to connecting.

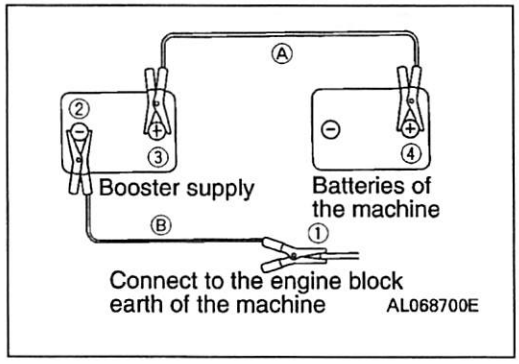

10. TROUBLESHOOTING

If it is felt that there is any abnormality, investigate the cause immediately and take the necessary action to prevent any serious failure.

If the cause is unknown, please contact your distributor for repairs.

When contacting your distributor, please give the machine serial number and engine number.

10.1 PROBLEMS WITH ENGINE RELATED PARTS

Problem	Main causes	Remedy
Starting motor does not turn when starting switch is turned to START	• Insufficient battery charge • Defective wiring • Failure in starting motor, relay	• Charge • Check, repair • Contact your distributor
Starting motor turns, but cranks engine slowly	• Insufficient battery charge • Defective ground connection wiring • Viscosity of engine oil is too high	• Charge • Check, repair • Change to proper viscosity
Starting motor turns, but engine does not start	• Lack of fuel • Air in fuel line • Failure in fuel injection pump •Failure in engine	• Check, add fuel • Bleed air • Contact your distributor • Contact your distributor
After warming-up operation, Engine oil pressure lamp on monitor panel stays lighted up even when engine speed is raised (Engine oil pressure does not rise)	• Lack of engine oil • Clogged engine oil filter • Failure in engine parts	• Check, add oil • Replace new parts • Contact your distributor
Engine water temperature gauge points to around red range, or steam spurts out from near radiator system	• Lack of coolant • Leakage of oil from coolant system • Loose fan belt • Clogged radiator fin • Defective thermostat • Overloading, operation under excessive load	• Check, add water • Check, repair or ccontact your distributor • Check, adjust, or replace new belt • Check, clean • Replace new parts • Reduce to below max. payload
Engine water temperature gauge points does not reach around green range	• Defective thermostat • Defective engine water temperature gauge	• Replace new parts • Replace new parts
Engine exhaust color is white	• Engine oil level is too high • Improper fuel	• Adjust to correct amount • Change to specified fuel
Engine exhaust color is too black	• Clogged air cleaner • Improper fuel • Failure in engine	• Check, clean • Change to specified fuel • Contact your distributor

Problem	Main causes	Remedy
Engine does not run smoothly	• Air in fuel line • Fuel filter clogged with dirt, water in fuel filter • Leakage of fuel from fuel system • Failure in engine	• Bleed air • Check, replace new parts, or repair • Check, repair • Contact your distributor
Engine stops when set to low speed	• Failure in engine	• Contact your distributor
Engine suddenly stops during operation	• Lack of fuel • Lack of engine oil • Failure in engine	• Check, add fuel • Check, add oil • Contact your distributor

10.2 PROBLEMS WITH CHASSIS RELATED PARTS

Problem	Main causes	Remedy
Machine does not move	• Parking brake still applied • Leakage of oil from hydraulic system • Travel lever cable disconnected • Failure in hydraulic equipment	• Release parking brake, or check brake piping • Check, repair • Check, repair • Contact your distributor
HST oil pressure lamp on monitor panel lights up during operation (HST oil pressure is lowered)	• Clogged hydraulic line filter • Clogged strainer inside hydraulic tank • Defective wiring • Failure in hydraulic equipment	• Check, clean • Check, clean • Check, repair • Contact your distributor
Abnormal noise generated from around pump	• Clogged strainer inside hydraulic tank • Leakage of oil from hydraulic system • Failure in hydraulic equipment	• Check, clean, or replace new parts • Check, repair • Contact your distributor
HST oil temperature lamp on monitor panel lights up during operation (Hydraulic oil temperature rises too high)	• Lack of oil inside hydraulic tank • Loose fan belt • Clogged oil cooler fins • Leakage of oil from hydraulic system • Operation under excessive load	• Check, add oil • Check, adjust or replace • Check, clean • Check, repair • Operate within max. payload
Rubber crawler comes off	• Rubber crawler tension too loose	• Check, adjust
Abnormal wear of sprocket	• Rubber crawler tension too tight	• Check, adjust

10.3 PROBLEMS WITH ELECTRIC RELATED PARTS

Problem	Main causes	Remedy
Battery charge lamp on monitor panel lights up during operation (Battery is not charging)	• Defective wiring • Blown fuse at rear of monitor panel • Loose fan belt • Defective alternator • Defective battery function	• Check, repair • Check, replace • Check, adjust or replace • Contact your distributor • Check, repair or replace
Head lamp is not bright	• Battery charge is too low • Defective alternator	• Charge • Contact your distributor
No lamps light up	• Blown fuse • Defective wiring • Defective lamp switch	• Check, replace • Check, repair • Check, replace
Individual head lamps, gauge lamps do not light up	• Blown bulb • Defective wiring	• Replace • Check, repair
Horn does not sound	• Blown fuse • Defective wiring • Defective horn	• Check, replace • Check, repair • Check, replace
Left, right turn signal lamps do not flash	• Blown fuse • Defective wiring • Defective flasher relay • Defective flasher switch	• Check, replace • Check, repair • Check, replace • Check, replace
Parking brake buzzer does not sound	• Blown fuse • Defective wiring • Defective buzzer • Defective parking brake switch	• Check, replace • Check, repair • Check, replace • Check, replace
Backup buzzer does not sound	• Blown fuse • Defective wiring • Defective buzzer • Defective backup switch	• Check, replace • Check, repair • Check, replace • Check, adjust or replace
Slope alarm buzzer does not sound	• Blown fuse • Defective wiring • Defective buzzer • Defective slope alarm unit	• Check, replace • Check, replace • Contact your distributor • Contact your distributor

MAINTENANCE

1. Basic outline of maintenance	3-2
2. Precautions for maintenance	3-4
3. Use of fuel and lubricants according to ambient temperature	3-6
4. Tools and tightening torques	3-8
5. Periodic replacement of critical parts	3-10
6. Maintenance schedule chart	3-12
7. Service procedure	3-13

1. BASIC OUTLINE OF MAINTENANCE

[1] OIL

- Oil is used under extremely heavy-duty conditions (high temperature, high pressure) in the engine, hydraulic pump, motor, and work equipment. Therefore, it deteriorates as time passes.
  Always use the grade of oil and the oil which matches the ambient temperature listed in this operation manual.
  Even if the oil is not dirty, always change it at the specified interval.
- When adding oil, do not mix oils of different grades or brands.
- Always add oil to the specified oil level. Too much oil and too little oil are both the cause of problems.
- When changing the oil, always replace the related oil filter at the same time.
- Always be careful when handling oil to prevent water, dirty, or other impurities from getting into the oil.
  A large proportion of problems with the machine are caused by impurities getting into the oil, so be extremely careful not to let impurities get into the oil: always store the oil indoors and carry out oil-filling operations in a dust-free environment.
- If the oil is a milky white, there is probably water or air in the circuit. In such cases, please contact your distributor.

[2] FUEL

- Do not use any fuel except diesel oil.
- Always use the fuel specified for the ambient temperature listed in this operation manual.
- The fuel pump is a precision instrument, so if fuel containing water or dirt is used, the fuel pump will stop working. Be extremely careful not to let impurities get into the fuel: always store the fuel indoors and carry out refueling operations in a dust-free environment.
- If fuel is stored in drum cans, store the drum cans on their sides so that the ports in the drum cans are in a straight line to the side. This action will prevent damp air from being sucked in.
- To prevent moisture in the air from getting into the fuel tank, always fill the tank after the completion of each day's work.
- If the machine runs out of fuel, or when the fuel filter has been replaced, it is necessary to bleed the air the circuit. Always read the separate operation manual for the engine when carrying out this operation.

[3] COOLANT

- Do not use river water, well water, or water from simple water lines as the coolant.
  Such kinds of water contain many impurities, such as calcium and dirt, so scale will collect inside the engine and radiator. This will cause improper heat exchange, and will lead to overheating.
- If the engine overheats, allow the engine to cool down, then add coolant.
- When using antifreeze, always follow the precautions given in the operation manual.

[4] GREASE

- Grease is used at the connecting points of the dump body or travel lever linkage to prevent gouging or noise.
- The grease nipples not listed in this manual are nipples used for overhaul, so there is no need to add grease to them. However, if any gouging or noise occurs during use, add grease.
- When adding grease, pump in grease until the old grease is completely forced out, then wipe off all the old grease. Be particularly careful to wipe off the grease at points where mud and dirty may stick and cause wear of the rotating parts.

[5] FILTERS

- Filters are used to prevent trouble caused when impurities in the oil, fuel, or air enter important equipment. When the replacement interval listed in this manual is reached, always replace or clean the filters.
  However, when using this machine under heavy-duty conditions, replace the filters before the specified replacement interval has passed.
- Do not wash and reuse oil filters or fuel filters. Always replace them with new parts.
- When replacing the oil filter, check the old filter for any metal particles or pieces of rubber from the hoses.
  If any rubber or metal is found, please contact your distributor. This action is important to prevent any failure before it occurs.
- When using new filters, do not remove the wrapping until immediately before using them.

[6] ELECTRICAL COMPONENTS

- It is extremely dangerous if electrical components become wet or the film covering them is broken. This may lead to electrical leakage and may cause misoperation of the machine. When washing the machine, take care not to get water onto electrical components.
- Never remove any electrical components from the machine or disassemble them.
- Always contact your distributor before installing additional electrical equipment to your machine.
- After the machine has been used near the sea or after it has been used for spreading fertilizer, wipe the electrical components carefully with a dry cloth to prevent corrosion.

[7] HYDRAULIC SYSTEM

- The hydraulic equipment is at high temperature and high pressure during operations and immediately after operations have been completed.
  When carrying out inspection and maintenance of the hydraulic equipment, always do as follows.
  (1) Stop the machine on level ground, and lower the work equipment to the ground so that there is no pressure in the hydraulic cylinder circuit.
  (2) Always stop the engine.
  (3) Loosen the hydraulic tank cap slowly, then remove it.
  (4) Always wait for the temperature to go down before starting maintenance. Even when the temperature goes down, the circuits are still under internal pressure, so when removing plugs or hoses, do not stand directly in front of them, and loosen the connections slowly before removing.
- If high-pressure hoses, connections, or hydraulic equipment have been removed, always replace the O-ring.
- When replacing or cleaning the hydraulic line filter or strainer, or when replacing or repairing the hydraulic equipment or hoses, always bleed the air from the circuit after completion of the operation.

2. PRECAUTIONS FOR MAINTENANCE

⚠ WARNING

- **Before carrying out inspection and maintenance, always read "2. PRECAUTIONS FOR INSPECTION AND MAINTENANCE in the SAFETY" volume and make sure that you understand the safety procedures for operations.**
- **Do not carry out any operation not listed in this manual for inspection and maintenance. When carrying out inspection and maintenance of the engine, always read the separate engine operation manual and make sure that you understand it.**

[1] CHECK HOURMETER

• Read the hourmeter every day to check if the required interval has been reached for any maintenance item.

[2] USE GENUINE PARTS

• When replacing parts, always use the genuine parts specified in the parts list.

[3] PRECAUTIONS WHEN ADDING OR CHANGING OIL OR GREASE

• When adding or changing fuel, oil, or grease, always use the type specified by Morooka. Be sure to use the viscosity specified for the ambient temperature.

• Never mix types of oil or brands of oil from different makers.

• The oil used when the machine is shipped from the factory is as shown in the table below.

Item	Type	Brand
Engine oil pan	CF-4 / DH-1 10W-30	JX Nippon Oil & Energy CF-4/DH-1 10W-30-
Hydraulic tank	Hydraulic oil ISO VG46	Idemitsu Kosan Super Hydro X 46
Travel motor reduction gear case	SAE90 GL-5	Showa Shell Sekiyu Gelco oil 5090

[4] PRECAUTIONS WHEN WASHING OR CLEANING MACHINE

1. Wash or clean the machine to make it easier to locate problem points. In particular, wash the oil filler, level gauge, and greasing plugs to prevent dirt or mud from entering when adding oil or grease.
2. Cover electrical parts, such as the starting motor or alternator, with a sheet to prevent water from getting on them.
3. Do not carry out high-pressure washing for the radiator or oil cooler parts.

[5] BE CAREFUL OF OIL AND COOLANT TEMPERATURE

1. It is dangerous to drain the oil or coolant or replace the filters immediately after stopping the engine. Wait for the machine to cool down before carrying out such operations.
2. When draining the oil, warm up the oil to a suitable temperature (approx. 20 – 40 deg C) before carrying out the operation.

[6] PRECAUTIONS WHEN CHECKING OIL LEVEL, ADDING OIL

1. When checking the oil level or adding oil, choose a place where there is no dust to prevent dirt from entering the oil line.
2. Use clean oil and grease. Use a clean container to prevent dirt from getting in.
3. If there is a strainer fitted to the oil filler port, do not remove the strainer when adding oil.
4. Check that the lubricating oil is at the correct level. The oil level should not be too high or too low.

[7] CHECKING DRAINED OIL, FILTER

- When the oil has been changed or the filter replaced, always check the drained oil and removed filter to check for metal particles or other foreign materials.

[8] SETTING UP WARNING SIGNS

- When the oil or coolant has been drained, put warning signs (Part No.: 1-41010-1210) in the operator's compartment to prevent anyone from starting the engine by mistake.

[9] PRECAUTIONS WHEN WASHING PARTS

- When washing parts, use a non-flammable washing agent or diesel oil.
  When using diesel oil, do not bring lighted cigarettes or cigarette lighters close.

[10] PRECAUTIONS WHEN INSTALLING PARTS

- When O-rings, gaskets, or other seals are used for the mounting surface, clean the mounting surface and always replace the seal with a new part.

[11] PRECAUTIONS WHEN CARRYING OUT INSPECTION AND MAINTENANCE OF A MACHINE AFTER OPERATIONS IN DUSTY AREAS

- Check carefully for clogging of the air cleaner, and clean the air cleaner element more frequently.
- Clean the radiator core, oil cooler core and inter cooler core more frequently to prevent clogging.
- Replace the fuel filter more frequently.
- Clean electrical parts carefully (in particular, the starting motor or alternator) to prevent dust from collecting.

[12] PRECAUTIONS WHEN CARRYING OUT INSPECTION AND MAINTENANCE ON MACHINES BEFORE STARTING OPERATIONS IN SWAMPY AREAS, RAIN, RIVERBEDS, OR SNOW

- Before starting operations, check that the drain plug under the engine and the greasing plugs for the track rollers are securely tightened.
- After completion of operations, wash the machine carefully and check for cracks and damage, and for loose or missing nuts and bolts.

3. USE OF FUEL AND LUBRICANTS ACCORDING TO AMBIENT TEMPERATURE

3.1 FUEL, COOLANT, AND LUBRICANT TABLE

NOTICE

- **The quality of engine oil influences significantly on the engine performance and start ability. Always use the engine oil of CF-4 10W-30 class or CF-4/DH-1 and of specified viscosity (refer to the table below) according to the ambient temperatures.**
- **Always use diesel fuel. Never use additives such as anti-freeze and water-removing agents. Otherwise, the fuel injection system may be damaged. Never use kerosene, as it may cause a trouble.**

- Select the fuel and oil from the table below according to the ambient temperature.
- The specified capacity is the total amount of oil, including the oil in the piping of the various components.
- The refill capacity is the amount of oil added when changing the oil during inspection and maintenance.
- When starting the engine in an ambient temperature of lower than 0 deg C, always use a grade specified for temperatures below 0 deg C, even if the temperature goes up to 10 deg C during the daytime.
- For the coolant mixture ratio of cooling water, see "Operation 7. Cold Weather Operation" in "[2] Coolant Mixture Ratio in Cooling Water".

RESERVOIR	KIND OF FLUID	AMBIENT TEMPERATURE -22 -4 14 32 50 68 86 104°F -30 -20 -10 0 10 20 30 40 °C	CAPACITY	
			Specified	Refill
Engine oil pan	Engine oil	SAE10W-30	11.2ℓ 2.96 US gal 2.46 UK gal	11.2ℓ 2.96 US gal 2.46 UK gal
Hydraulic oil tank	Hydraulic oil	ISO VG56 ISO VG46 ISO VG32	58ℓ 15.32 US gal 12.76 UK gal	55ℓ 14.53 US gal 12.10 UK gal
Travel motor reduction gear case(each)	Gear oil	SAE90	1.3ℓ 0.34 US gal 0.29 UK gal	-
Fuel tank	Diesel fuel	ASTM D975 No.2 ASTM D975 No.1	75ℓ 19.82 US gal 16.50 UK gal	-
Cooling system	Water	Long Life Coolant	6.3ℓ 1.66 US gal 1.39 UK gal	-

REMARK

- When fuel sulphur content is less than 0.5 %, change oil in the oil pan every periodic maintenance hours described in this manual.

  Change oil according to the following table if fuel sulphur content is above 0.5%.

Fuel sulphur content	Change interval of oil in engine oil pan
0.5 to 1.0%	1/2 of regular interval
Above 1.0%	1/4 of regular interval

- We recommend genuine oil which has been specifically formulated and approved for use in engine and hydraulic work equipment applications.

Specified capacity: Total amount of oil including oil for components and oil in piping.
Refill capacity: Amount of oil needed to refill system during normal inspection and maintenance.

ASTM: American Society of Testing and Material
SAE: Society of Automotive Engineers
API: American Petroleum Institute

- Hydraulic oil: JX Nippon Oil & Energy Highland Wide KV46.

  ★ When changing the hydraulic oil, please contact your distributor.

4. TOOLS AND TIGHTENING TORQUES

4.1 INTRODUCTION OF NECESSARY TOOLS

The following tools are needed when carrying out maintenance.

If the tools are broken or worn, please order new tools from your distributor.

No.	Name of tool	Part No.	Remarks
1	Wrench set	0-9100-00000	Width across flats (S1 x S2)
		0-9100-00709	7mm x 9mm
		0-9100-00810	8mm x 10mm
		0-9100-01113	11mm x 13mm
		0-9100-01214	12mm x 14mm
		0-9100-01719	17mm x 19mm
		0-9100-02224	22mm x 24mm
2	Wrench	0-9105-04600	Width across flats 46mm
3	Screw driver (+)	0-9210-00150	
4	Screw driver (-)	0-9200-00200	

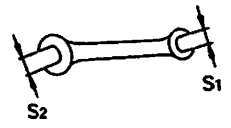

AD053370

4.2 TORQUE LIST FOR BOLTS AND NUTS

Unless otherwise specified, tighten the metric bolts and nuts to the torque shown in the table below.

The tightening torque is determined by the width across flats (b) of the nut and bolt.

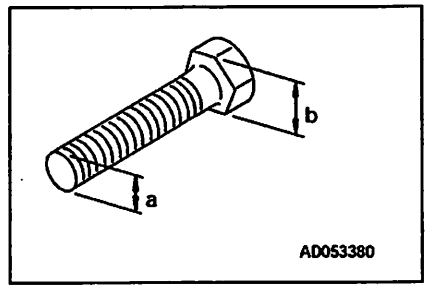

NOTICE

When tightening panels or other parts with tightening fixtures made of plastic, be careful not to use excessive tightening torque. Tightening excessively will damage the plastic parts. Be extremely careful when tightening.

Thread diameter x Width across thread pitch flats (a) (mm x mm)	Width across flats (b) (mm)	Tightening torque (kgf-m) {N-m}	
		Tensile strength 4T	Tensile strength 11T
3x0.5	5.5	0.05 {0.5}	0.2 {1.8}
4x0.7	7	0.1 {1.0}	0.4 {4.1}
5x0.8	8	0.2 {2.2}	0.8 {8.2}
6x1.0	10	0.4 {3.6}	1.4 {14.0}
8x1.25	13	0.9 {8.9}	3.5 {34.0}
10x1.5	17	1.8 {17.7}	6.9 {67.4}
12x1.75	19	3.2 {30.9}	12.0 {117}
14x2.0	22	5.0 {49.1}	19.1 {187}
16x2.0	24	7.8 {76.7}	29.7 {291}
18x2.5	27	10.7 {105}	40.9 {401}
20x2.5	30	15.3 {149}	58.1 {570}
22x2.5	32	20.8 {203}	79.0 {775}
24x3.0	36	26.4 {258}	100 {983}
27x3.0	41	38.6 {378}	147 {1440}
30x3.5	46	52.4 {513}	199 {1955}
33x3.5	50	71.3 {699}	271 {2660}
36x4.0	55	91.6 {898}	348 {3416}
39x4.0	60	119 {1162}	451 {4421}

5. PERIODIC REPLACEMENT OF CRITICAL PARTS

5.1 PERIODIC REPLACEMENT INTERVAL (EVERY 2 YEARS)

In order to further increase the safety of the machine Morooka recommends periodic inspection and replacement of critical parts (hydraulic hoses, fuel hoses, etc.) which are related to causes of fire and to efficiency in the raising and lowering of the dump body and traveling and stopping functions of the machine.

With these parts, the material changes as time passes, and they easily wear or deteriorate. However, it is difficult to judge the condition of the parts simply by periodic maintenance, so they should always be replaced after a fixed time has passed, regardless of their condition. Always replace them with new genuine parts to ensure that the machine always maintains its function completely.

5.2 PERIODIC INSPECTION

⚠ WARNING

- **Check the hydraulic hoses and fuel hoses carefully to check for cracks, deterioration, or other damage, and to check that there is no leakage from the connections.**
  When carrying out checks before starting, always check the ground under the machine to check for traces of oil leakage.
- **When replacing the hydraulic hoses or fuel hoses, always order genuine parts. Never use any imitation or substitute parts.**
- **When any hydraulic hose is replaced, always replace the O-rings at the same time. Failure to do this will cause oil leakage.**

If the monthly inspection or checks before starting show any abnormality, such as leakage of oil or deformation and cracking, tighten the parts immediately or replace them with new genuine parts.

When doing this, check the hose clamps at the same time, and replace them if they are deformed or cracked.

Check and repair any hydraulic hoses, even if they are not listed as critical parts.

The table below shows the checks to be carried out during periodic maintenance.

Periodic maintenance interval	Inspection items
Checks before starting	• Leakage of oil from caulked portions, connections of fuel hoses, hydraulic hoses
Monthly inspection	• Leakage of oil from caulked portions, connections of fuel hoses, hydraulic hoses • Damage to fuel hoses, hydraulic hoses (cracks, wear, gouging, swelling, crushing) • Interference with other parts
Every 2 years inspection	• Replacement of critical parts • Leakage of oil from caulked portions, connections of fuel hoses, hydraulic hoses • Damage to fuel hoses, hydraulic hoses (cracks, wear, gouging, swelling, crushing) • Interference with other parts

5.3 SPECIFIED PERIODIC REPLACEMENT PARTS

⚠ CAUTION

- **The list of periodic replacement parts specified by Morooka does not include the fuel hoses on the engine. Refer to the separate engine parts list (parts book) and carry out replacement in the same way as for the periodic replacement parts specified by Morooka.**
- **For details of the part numbers for periodic replacement parts specified by Morooka, see the parts list (parts book), and contact your distributor to place orders.**

As the periodic replacement parts, the parts shown in the table below should be used.

For details of the parts, see the parts list (parts book).

No.	No. Periodic replacement parts	Q'ty	Replacement interval
1	Fuel hose (fuel tank to fuel/water separator)	1	Replace every 2 years
2	Fuel hose (fuel/water separator to fuel supply pump)	1	
3	Fuel hose (fuel pump to fuel filter)	1	
4	Fuel hose (fuel filter to fuel injection pump)	1	
5	Fuel hose (fuel injection pump to fuel tank)	1	
6	Hydraulic hose (main pump to/from travel motor)	4	
7	Hydraulic hose (gear pump to main control valve)	1	
8	Hydraulic hose (main control valve to dump cylinder)	2	
9	Seat belt	1	Replace every 3 years

6. MAINTENANCE SCHEDULE CHART

Service item	Page
7.2 INITIAL 50 HOURS SERVICE ★This is only after the first 100 hours for new machines	3-13
[1] Change engine lubricating oil, replace engine oil filter	3-33
7.3 INITIAL 100 HOURS SERVICE ★This is only after the first 100 hours for new machines	3-13
[1] Replace hydraulic line filter	3-34
[2] Change oil in hydraulic tank	3-35
7.4 INITIAL 500 HOURS SERVICE ★This is only after the first 500 hours for new machines	3-13
[1] Change oil inside travel motor reduction gear case	3-36
7.5 WHEN REQUIRED ★If necessary, carry out these checks every day.	3-14
[1] Check, adjust rubber crawler tension	3-14
[2] Check rubber crawler for damage, wear	3-15
[3] Clean, replace air cleaner	3-16
[4] Clean inside of cooling system and change coolant	3-18
[5] Check, clean radiator fins, oil cooler fins	3-20
[6] Fuel system prime	3-21
7.6 CHECK BEFORE STARTING ★Always carry out the following checks before starting the engine.	3-22
[1] Check coolant level, add water	3-22
[2] Check fuel level, add fuel	3-22
[3] Check, drain water from fuel/water separator	3-23
[4] Check engine lubricating oil level, add oil	3-23
[5] Check oil level in hydraulic tank, add oil	3-24
[6] Check dust indicator	3-24
[7] Check, adjust fan belt tension	3-25
[8] Check electric wiring	3-26
[9] Check operation of switches, lamps, gauges	3-26
[10] Check operation of horn, alarm buzzer	3-26
7.7 EVERY 50 HOURS SERVICE	3-27
[1] Drain water, sediment from fuel tank	3-27
[2] Drain water, sediment from fuel/water separator	3-27
[3] Check loosen of fuel piping and bands	3-28
7.8 EVERY 100 HOURS SERVICE	3-29
[1] Check battery electrolyte level, add distilled water	3-29
7.9 EVERY 250 HOURS SERVICE	3-30
[1] Grease travel lever	3-30
[2] Grease travel lever linkages	3-30
[3] Grease all parts of dump cylinder	3-31
[4] Grease dump body rear side flap opening rod	3-31
[5] Grease dump body hinge pin	3-31
[6] Grease track roller pivot shaft	3-31
7.10 EVERY 500 HOURS SERVICE	3-32
[1] Replace fuel filter	3-32
[2] Clean fuel/water separator	3-32
[3] Change engine lubricating oil, replace engine oil filter	3-33
[4] Replace hydraulic line filter	3-34
[5] Change oil in hydraulic tank	3-35
7.11 EVERY 1500 HOURS SERVICE	3-36
Change oil inside travel motor reduction gear case	3-36

7. SERVICE PROCEDURE

7.1 OUTLINE OF INSPECTION AND MAINTENANCE PROCEDURES

This section explains the methods for inspection and maintenance operations listed in "6. MAINTENANCE SCHEDULE CHART".

Always observe the precautions related to safety for each item, and carry out the operation safely.

If the operation is difficult, do not try to carry it out; please contact your distributor.

- The operations in this section require the following parts to be removed or opened, and then installed or closed. For details of the procedure, see the following sections.
  (1) Engine inspection cover: See "OPERATION, 2.12 ENGINE BONNET".
  (2) Battery inspection cover: See "OPERATION, 2.13 ENGINE UPPER AND REAR ".
  (3) Undercover: See "OPERATION, 2.14 UNDERCOVER".

7.2 INITIAL 50 HOURS SERVICE

Carry out the following maintenance after the initial 100 hours breaking-in operation for new machines.

[1] CHANGE ENGINE LUBRICATING OIL, REPLACE ENGINE OIL FILTER

For details of the method of maintenance, see EVERY 500 HOURS SERVICE.

7.3 INITIAL 100 HOURS SERVICE

Carry out the following maintenance after the initial 100 hours breaking-in operation for new machines.

[1] REPLACE HYDRAULIC LINE FILTER

For details of the method of maintenance, see EVERY 500 HOURS SERVICE.

[2] CHANGE OIL IN HYDRAULIC TANK

For details of the method of maintenance, see EVERY 500 HOURS SERVICE.

7.4 INITIAL 500 HOURS SERVICE

Carry out the following maintenance after the initial 500 hours breaking-in operation for new machines.

[1] CHANGE OIL INSIDE TRAVEL MOTOR REDUCTION GEAR CASE

For details of the method of maintenance, see EVERY 1500 HOURS SERVICE.

7.5 WHEN REQUIRED

[1] CHECK, ADJUST RUBBER CRAWLER TENSION

⚠ WARNING

The tension adjuster for the rubber crawler is charged with grease. The grease is kept under high pressure by the recoil spring inside the tension adjuster.
Always follow the precautions given below. Failure to follow these precautions may cause the valve to fly out, resulting in serious injury or accident.
- **Never loosen the tension adjustment valve more than one turn. There is danger that the valve may fly out.**
- **When adjusting the tension, never stand directly in front of the valve. It is dangerous.**

• CHECKING TENSION

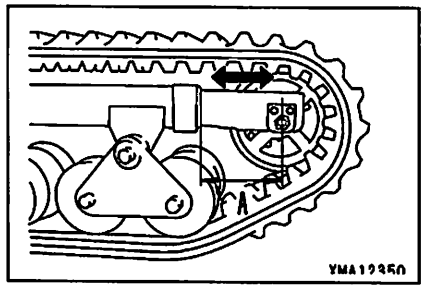

1. Drive the machine a short distance forward and backward, then stop the engine.
2. Measure distance **A** from the rear end of the track frame to the center of the idler, and check that it is within the following range.
   ★ Dimension **A**: 260 ± 20 mm

★ If the result of the measurement shows that dimension **A** is greater than the specified range, adjust the rubber crawler tension. For details, see "ADJUSTING TENSION".

• ADJUSTING WHEN TENSION IS LOOSE (When measurement is below range for dimension A)

★ Before adjusting, prepare a grease pump.

1. Remove 2 bolts, then remove grease valve cover (1).

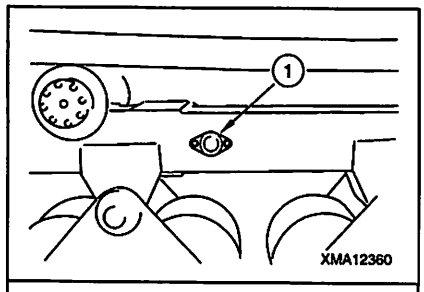

2. Using the grease pump, pump in grease through valve (2) until dimension **A** is within the range given for "CHECKING TENSION".
   ★ If dimension **A** does not enter the range above even when grease is pumped in, the rubber crawler must be replaced, or there is probably some abnormality in the tension adjuster, so please contact your distributor.
3. Drive the machine a short distance forward and backward to make the tension uniform, then repeat the steps for "CHECKING TENSION" to measure dimension **A**.
4. Install grease valve cover (1), then tighten the bolts.

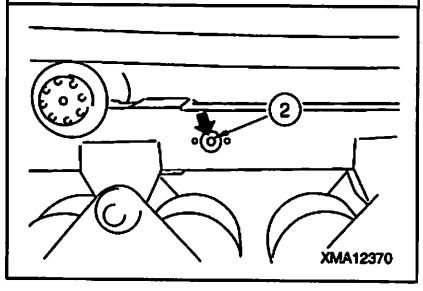

• **ADJUSTING WHEN TENSION IS TIGHT (when measurement is above range for dimension A)**

1. Remove 2 bolts, then remove grease valve cover (1).

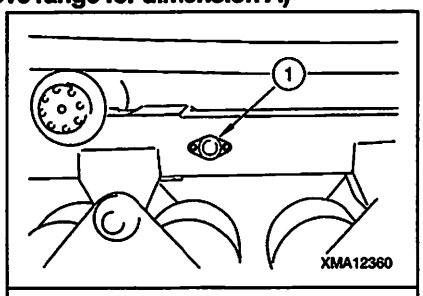

2. Loosen valve (2) until dimension **A** is within the range given for "CHECKING TENSION".
   ★ If the grease comes out slowly, push the idler end of the rubber crawler strongly.
   Never loosen valve (2) more than 1 turn.
   ★ If the grease still comes out slowly, start the engine and drive the machine a short distance forward and backward.
3. Tighten valve (2) securely.
4. Drive the machine a short distance forward and backward to make the tension uniform, then repeat the steps for "CHECKING TENSION" to measure dimension **A**.
5. Install grease valve cover (1), then tighten the bolts.

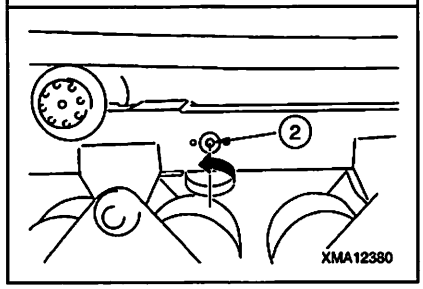

[2] CHECK RUBBER CRAWLER FOR DAMAGE, WEAR

⚠ WARNING

If there are any large cracks or damage to the rubber crawler, replace the rubber crawler immediately. There is danger that the rubber crawler may break suddenly without warning during operations.

NOTICE

- **When checking the rubber crawler, remove all mud and snow from the crawler before checking.**
- **Using the rubber crawler when it has exceeded the wear limit will cause slipping and will reduce the drawbar pull. If the rubber crawler is in the following condition, replace it with a new rubber crawler.**

- If the height of the lug is less than 1/3 of the standard dimension, replace the rubber crawler.
  ★ Standard height: 35 mm
  ★ Wear limit: 12 mm
- If there are cracks or deep cuts and the wire in the core of the rubber crawler can be seen, replace the rubber crawler.

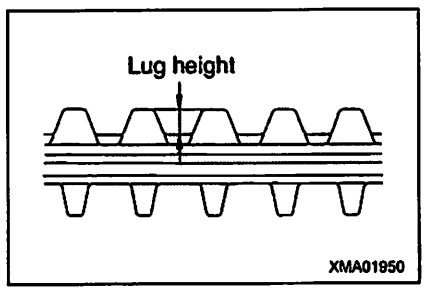

[3] CLEAN, REPLACE AIR CLEANER

⚠ WARNING

- **Never clean, or replace the air cleaner when the engine is running.**
- **When using compressed air to clean the element, there is danger that dirt and dust may fly and get into eyes. Always wear safety glasses.**

NOTICE

- **When cleaning the outer element, do not hit it or knock it against other objects.**
- **Do not use the outer element if the folds or seal are damaged.**
- **Replace the outer element with a new part if it has been cleaned three or four times, or if it has been used for one year. When replacing the outer element, replace the inner element at the same time.**
- **After cleaning the outer element, if the engine exhaust gas color is black or there is lack of power, replace the outer element. When replacing the outer element, replace the inner element at the same time.**
- **Never clean the inner element and use it again. Always replace it with a new element.**

• CHECK AIR CLEANER

1. Open the engine bonnet. For details, see "OPERATION 2.12 ENGINE BONNET".
2. If dust indicator (1) inside the air cleaner is red, clean the air cleaner element.

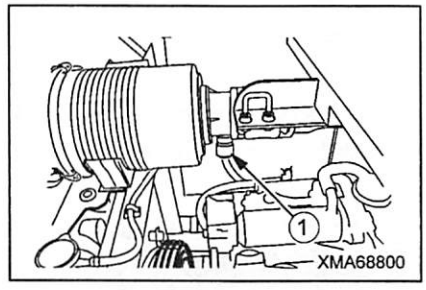

• METHOD OF CLEANING OUTER ELEMENT

1. Open the engine bonnet. For details, see "OPERATION 2.12 ENGINE BONNET".
2. Remove 3 catchers (3) at the air cleaner cover, then remove air cleaner cover (2).

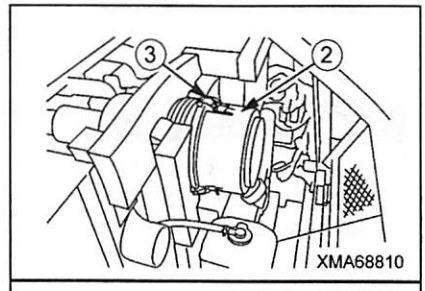

3. Take out the outer element (4).

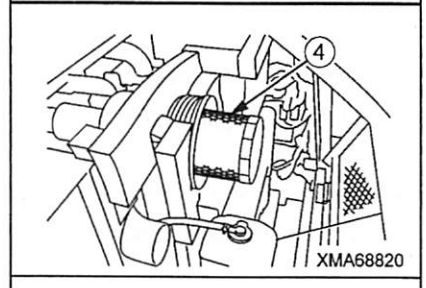

4. Blow with dry compressed air (max. 0.68 MPa [7 kgf/cm^2]) along the folds from the inside of element (4).
   Next, blow along the folds from the outside of the element, then blow from the inside of the element again.

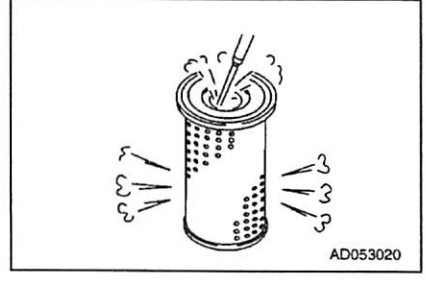

5. After cleaning, use a light bulb from inside the element to check if there are any small holes or thin places in the element. Replace the element if such places are found.

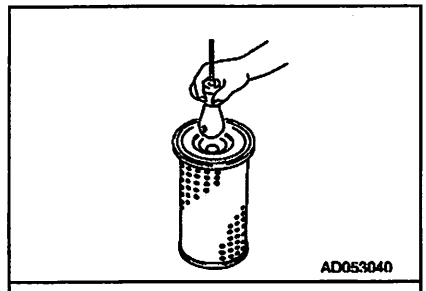

6. After cleaning the outer element (4), insert the outer element (4) to the body.
7. Remove the valve (5) from the air cleaner cover (2), then clean the inside of the valve and cover.
8. After cleaning the valve (5) and air cleaner cover (2), install the valve (5) to air cleaner cover (2).

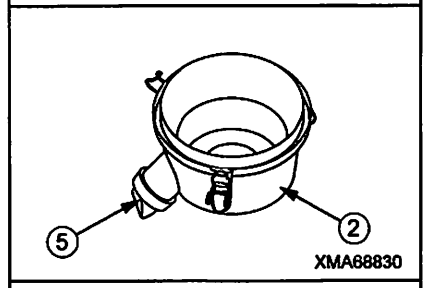

9. Fit the air cleaner cover (2) to the body, then secure with catcher (3).
   ★With the air cleaner cove (2), install with the stamped "TOP" mark upward.
10. Close the engine bonnet. For details, see "OPERATION 2.12 ENGINE BONNET".

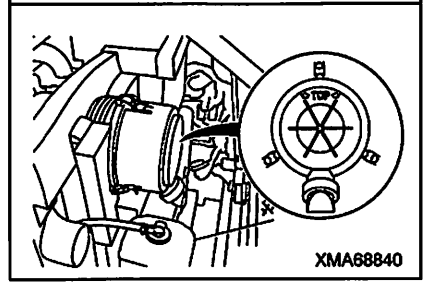

• METHOD OF REPLACING OUTER ELEMENT

Remove the outer element and replace it with a new element.

For details of the procedure, see METHOD OF CLEANING OUTER ELEMENT. When replacing the outer element, replace the inner element at the same time. For details, see METHOD OF REPLACING INNER ELEMENT.

• METHOD OF REPLACING INNER ELEMENT

1. Remove the outer element.
   For details of the procedure, see METHOD OF CLEANING OUTER ELEMENT.
2. Take the out inner element (6).
3. Cover the air connector end (air outlet) with a clean cloth or cloth tape.
4. Clean the inside of the body, then remove the cover fitted in Step 3.
5. Insert the new inner element (6) in the body.
6. Install the outer element (4).
   For details of the procedure, see METHOD OF CLEANING OUTER ELEMENT.

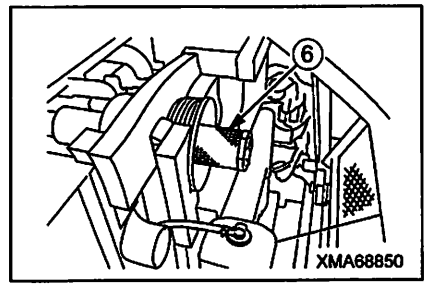

[4] CLEAN INSIDE OF COOLING SYSTEM AND CHANGE COOLANT

⚠ WARNING

- **Immediately after the engine is stopped, the coolant is at high temperature, so there is danger of burns if you drain the coolant immediately.**
  Wait for the engine to cool down before draining the coolant.
- **Do not suddenly remove the cap when the radiator water temperature is high. Boiling water will spurt out and cause burns.**
  Wait for the water temperature to go down before removing the cap. When removing the cap, turn it slowly to fully release the internal pressure, then remove the cap.

NOTICE

- **Replace the cooling water (coolant) every year or 2000 running hours whichever comes first.**
- **For the coolant mixture ratio of cooling water, see "Operation 8. Cold Weather Operation" in "[2] Coolant Mixture Ratio in Cooling Water ".**

Clean the cooling water circuit as follows.

★Use tap water for the coolant.

Do not use river water, well water, or untreated water supplies.

1. Stop the machine on level ground and stop the engine.
2. Open the engine bonnet. For details, see "OPERATION 2.12 ENGINE BONNET".
3. Turn radiator cap (2) slowly to fully release the internal pressure, and remove it.

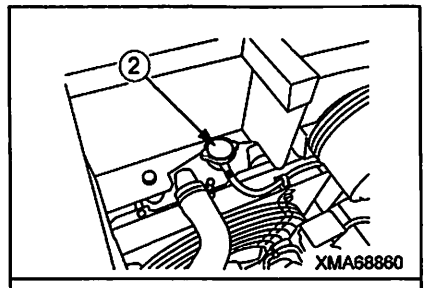

4. Open the undercover. For details, see "OPERATION 2.14 UNDERCOVER".
5. Loosen the band (4) and remove the radiator drain cap (3), then drain the water.
   ★If there is antifreeze in the coolant, put container to catch the water under of the drain pipe.
6. After draining the water, install the radiator drain cap (3) , then add tap water through the water filler to fill the radiator.
   ★Tighten the band (4) of radiator drain cap (3) slightly.

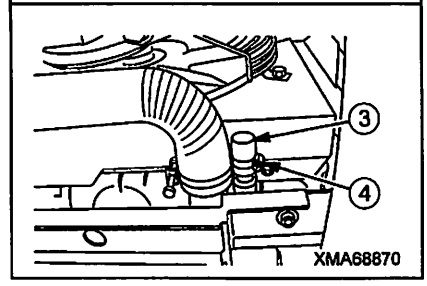

7. Remove radiator drain cap (3), then start the engine, run at low idling, and run water through the system to flush it for 10 minutes.
   ★While running water through the cooling system to flush it, be careful to adjust the water flow so that the radiator is always full.
   ★While running water through the cooling system to flush it, be careful that the water supply hose does not slip out of the water filler.
8. After flushing the system, stop the engine, stop the water supply, then drain the water.
9. After draining the water, install the radiator drain cap (3), then add cleaning agent through the water filler.
   ★For details of the method of cleaning, see the instructions on the cleaning agent.
   ★Tighten the band (4) of radiator drain cap (3) slightly.

10. After flushing with cleaning agent, remove radiator drain cap (3), drain the water, then start the engine, run at low idling, and flush with water until clean water comes out.
    ★While running water through the cooling system to flush it, be careful to adjust the water flow so that the radiator is always full.
    ★While running water through the cooling system to flush it, be careful that the water supply hose does not slip out of the water filler.
11. When clean water comes out, stop the engine, and install the radiator drain cap (3), then tighten the band (4) securely.
12. Add tap water through the water filler to fill the radiator.
13. Start the engine, run for 5 minutes at low idling, then run for a further 5 minutes at high idling to remove the air from the coolant.
    ★Leave the radiator cap removed when doing this.
14. Stop the engine, leave for approx. 3 minutes, then add tap water to near the top of the water filler, and tighten the radiator cap (2).

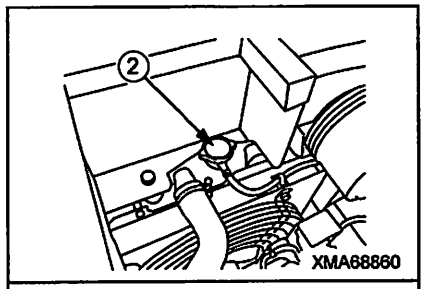

15. Remove the reserve tank (1) drain the coolant inside the reserve tank, then wash the inside.
16. Install reserve tank (1) to its original position, then fill with tap water to between the LOW and FULL lines.
17. Close the engine bonnet. For details, see "OPERATION 2.12 ENGINE BONNET".
18. Close the undercover. For details, see "OPERATION 2.14 UNDERCOVER".

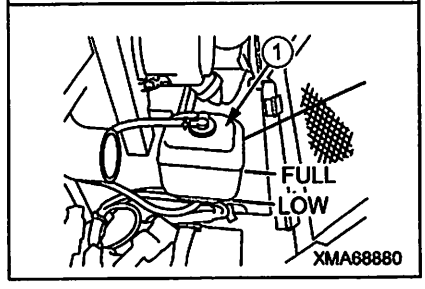

[5] CHECK, CLEAN RADIATOR, OIL COOLER FINS

⚠ WARNING

- **Never inspect or clean the fins when the engine is running. Always stop the engine before starting the operation.**
- **When using compressed air to clean the fins, there is danger that dirt and dust may fly and get into eyes. Always wear safety glasses.**

NOTICE

- **When cleaning the fins, use compressed air at a pressure of less than 0.29Mpa {3 kgf/cm^2} , and stand away from the fins when directing the compressed air.**
  If the compressed air is blown directly against the radiator or is blown at high pressure, the fins will be damaged and this will cause leakage of water or oil.
- **When cleaning the fins, do not use steam or water instead of compressed air. This causes clogging.**

1. Open the engine bonnet. For details, see "OPERATION 2.12 ENGINE BONNET".
2. Check the radiator fins (1) and oil cooler fins (2) to see if there is any mud, dirt, dead leaves, or paper clogging the fins.
3. If the result of the inspection shows that the fins are clogged, blow with dry compressed air (0.29 MPa [3 kgf/cm^2]) to clean.
4. After cleaning the fins, close the engine bonnet. For details, see "OPERATION 2.12 ENGINE BONNET".

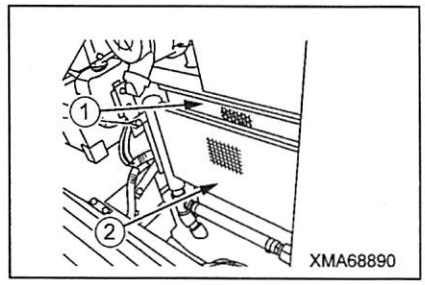

[6] FUEL SYSTEM PRIME

⚠ WARNING

Contact with high pressure fuel may cause fluid penetration and burn hazards. High pressure fuel spay may cause a fire hazard. Failure to follow these inspection, maintenance and service instructions may cause personal injury or death.

NOTICE

Do not crank the engine continuously for more than 15 seconds. Allow the starting motor to cool for two minutes before cranking the engine again.

If air enters the fuel system, the air must be purged from the fuel system before the engine can be started. Air can e nter the fuel system when the following events occur.

- The fuel tank is empty or the fuel tank has been partially drained.
- The low pressure fuel lines are disconnected.
- A leak exists in the low pressure fuel system.
- The fuel filter has been replaced.

Use the following procedures in order to remove air from the fuel system.

1. Open the engine bonnet. For details, see "OPERATION 2.12 ENGINE BONNET".
2. Remove the engine rear cover and engine upper cover. For details, see "OPERATION 2.13 ENGINE REAR COVER AND ENGINE UPPER COVER".
3. Fill the fuel tank with fuel and turn the lever (2) of the fuel/water separator (1) on the inside of the fuel tank to the OPEN (vertical) position.
4. Loosen air vent plug (4) on the top of fuel filter (3) by two to three turns.
5. When the fuel flowing out of plug (4) no longer contains "bubbles", tighten plug (4).
6. Loosen air vent plug (6) of fuel injection pump (5) by 2 to 3 turns.
7. When the fuel flowing out of plug (6) no longer contains "bubbles", tighten plug (6).

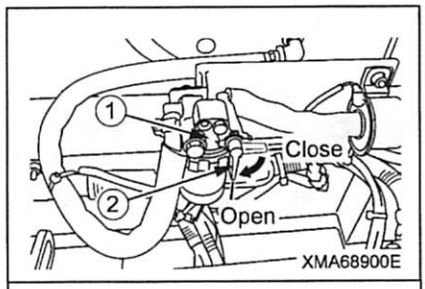

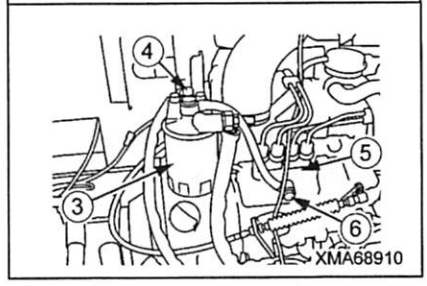

NOTICE

Except during an air bleeding operation, be sure to keep air vent plug (6) of the fuel injection pump tightened. Otherwise, the engine may stall.

8. Install the engine rear cover and engine upper cover. For details, see "OPERATION 2.13 ENGINE REAR COVER AND ENGINE UPPER COVER".
9. Close the engine bonnet. For details, see "OPERATION 2.12 ENGINE BONNET".

7.6 CHECK BEFORE STARTING

[1] CHECK COOLANT LEVEL, ADD WATER

⚠ WARNING

When checking the coolant level and adding water, always carry out the operation at the reserve tank. Never remove the radiator cap to check.

NOTICE

If the result of the coolant level check shows that more water must be added than usual, there is probably a water leak, so search for the cause and repair the problem immediately.

1. Open the engine bonnet. For details, see "OPERATION 2.12 ENGINE BONNET".
2. Check the level in reserve tank (1) to confirm that the coolant is between the LOW and FULL lines.
   If the water level is low, add tap water.
3. Remove the cap (2) of the reserve tank (1) and add tap water.
4. After adding water, tighten the cap (2) securely.
5. Close the engine bonnet. For details, see "OPERATION 2.12 ENGINE BONNET".

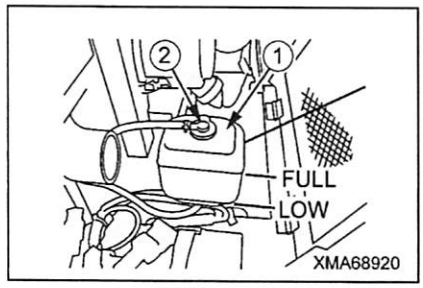

[2] CHECK FUEL LEVEL, ADD FUEL

⚠ DANGER

When adding fuel, never let the fuel overflow from the tank. This will cause fire.

1. Check the fuel level with level gauge (1) at the side face of the fuel tank.
2. Release the lock on the cap (2) with a key and remove the cap (2) from the fuel tank and add fuel through the fuel filler.
3. Check the breather hole on the inside of the cap, and if it is clogged, wash it.
4. After adding fuel, tighten the cap (2) securely and lock up it with a key.

★Always fill the fuel tank after completing the day's operation.

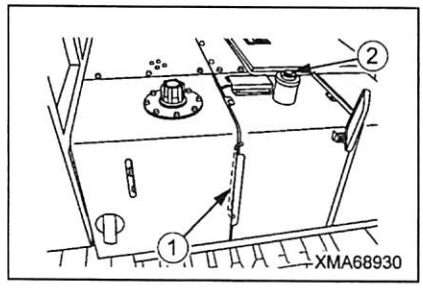

[3] CHECK, DRAIN WATER FROM FUEL/WATER SEPARATOR

★ Set a container under the fuel/water separator to catch the water and fuel.

★Fuel/water separator is installed to inside surface of the mainframe right end (fuel tank near side).

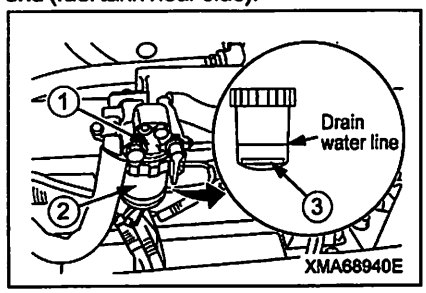

1. Open the engine bonnet. For details, see "OPERATION 2.12 ENGINE BONNET".
2. Check the case (2) of the fuel/water separator (1), confirm if the red ring (3) inside the case (2) has reached "DRAIN WATER" line on the case (2).
   If red ring (3) is close to the DRAIN WATER line, drain the water. For details, see "MAINTENANCE 7.6 [2] DRAIN WATER, SEDIMENT FROM FUEL/WATER SEPARATOR".
3. Close the engine bonnet. For details, see "OPERATION 2.12 ENGINE BONNET".

[4] CHECK ENGINE LUBRICATING OIL LEVEL, ADD OIL

• CHECKING OIL LEVEL

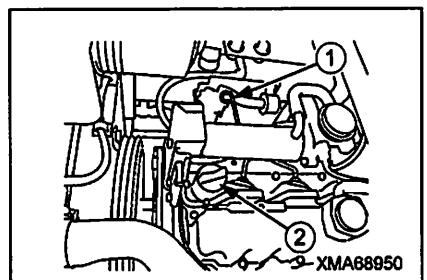

1. Open the engine bonnet. For details, see "OPERATION 2.12 ENGINE BONNET".
2. Pull out dipstick (1) and wipe the oil off with a cloth.
3. Insert dipstick (1) fully into the gauge guide, then pull it out again.
4. If there is oil on dipstick (1) in the notched area, the oil level is correct.
   If the oil does not reach the bottom (L) of the notched area, add engine oil.

• FILLING WITH OIL

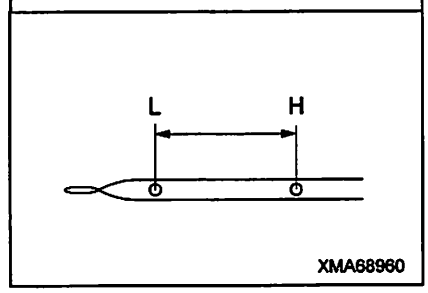

1. Remove the cap (2) and add engine oil.
   ★ For details of the engine oil, see "3. USE OF FUEL AND LUBRICANTS ACCORDING TO AMBIENT TEMPERATURE".
   ★Use a container with an attached hose when filling with oil.
2. Check the oil level again, and if it is within the specified range, tighten cap (2) securely.
3. Close the engine bonnet. For details, see "OPERATION 2.12 ENGINE BONNET".

[5] CHECK OIL LEVEL IN HYDRAULIC TANK, ADD OIL

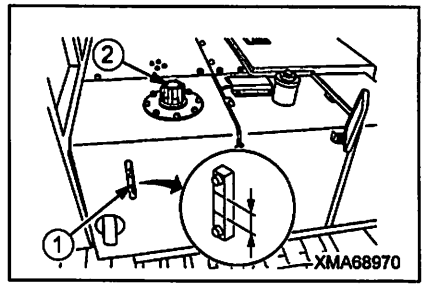

1. Use level gauge (1) at the side face of the hydraulic tank to check the oil level and the condition of dirt in the oil. The oil level should be between the top and bottom red lines on the gauge.
2. If the oil level is low, remove cap (2) of the hydraulic tank and add hydraulic oil through the oil filler.
   ★For details of the hydraulic oil, see "3. USE OF FUEL AND LUBRICANTS ACCORDING TO AMBIENT TEMPERATURE".
3. Check the breather hole inside the cap and clean it if it is clogged.
4. After adding oil, tighten cap (2) securely.

[6] CHECK DUST INDICATOR

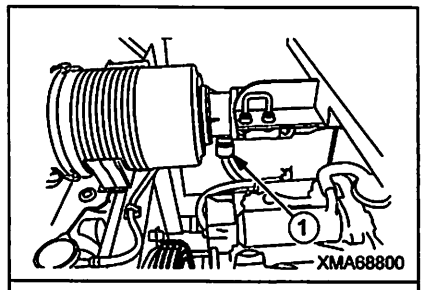

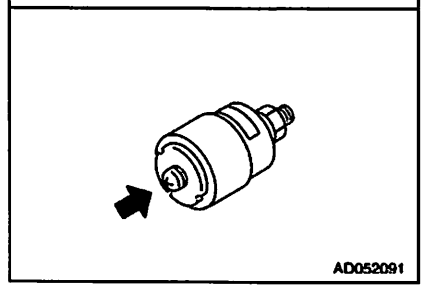

1. Open the engine bonnet. For details, see "OPERATION 2.12 ENGINE BONNET".
2. Check if the he red piston has appeared in the transparent portion of the dust indicator (1).
   If the red piston has appeared, clean or replace the element immediately.
   ★For details of the method of cleaning the element, see "7.5 WHEN REQUIRED".
3. After checking, cleaning, or replacing, push the knob or dust indicator to return the red piston to its original position.
4. Close the engine bonnet. For details, see "OPERATION 2.12 ENGINE BONNET".

[7] CHECK, ADJUST FAN BELT TENSION

• CHECKING TENSION

1. Open the undercover. For details, see "OPERATION 2.14 UNDERCOVER".
2. Go under the machine and push with your finger (approx. 58N {6kg}) at a point midway between the fan pulley and alternator pulley.
   The deflection should be approx. 7 - 9 mm.
3. If the deflection is too large, adjust the belt tension. For details, see "ADJUSTING TENSION".

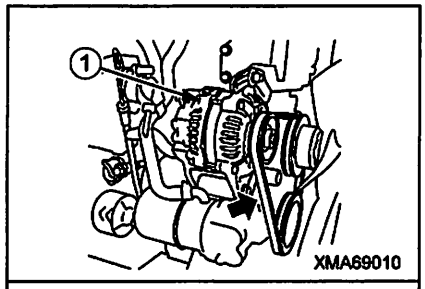

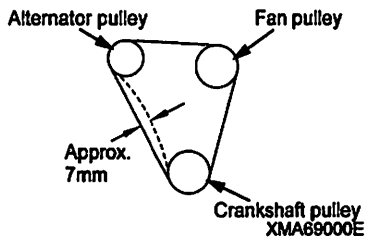

• ADJUSTING TENSION

1. Loosen bolt (2) and lock nut (3) at the bottom of the alternator (1).

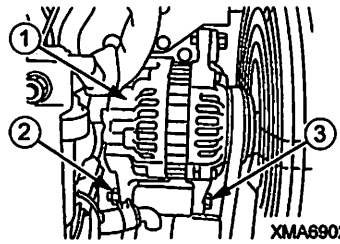

2. Open the engine bonnet. For details, see "OPERATION 2.12 ENGINE BONNET".
3. Turn adjustment bolt (4) to move the alternator (1) to the tank end, to adjust the belt deflection to approx. 7 - 9 mm.
4. Tighten lock nut (3) and bolt (2) at the bottom of the alternator first, and tighten adjustment bolt (4).
5. Repeat the procedure for checking the tension to check the belt tension again.
6. Close the undercover. For details, see "OPERATION 2.14 UNDERCOVER".
7. Close the engine bonnet. For details, see "OPERATION 2.12 ENGINE BONNET".

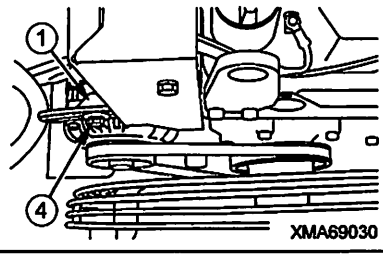

[8] CHECK ELECTRIC WIRING

⚠ DANGER

If any tool touches between the battery positive (+) terminal and the chassis, there is danger that sparks will be caused. Do not put tools and other metal objects in your breast pocket. They may fall out.

- Open the engine bonnet, and check for looseness of the battery terminal, looseness of the ground connection and battery relay wiring, and for signs of short circuits.
- Open the engine bonnet, and check for loose starting motor wiring and signs of short circuits.
- Open the engine bonnet, and check loose alternator wiring and signs of short circuit.

[9] CHECK OPERATION OF SWITCHES, LAMPS, GAUGES

- Turn the starting switch to the ON position and check that the monitor lamps light up on the control panel box and monitor panel.
- Turn the starting switch to the ON position, operate the lamp switch and flasher switch (turn signal indicator) inside the combination switch, and check that each lamp lights up.
  ★ If any lamp does not light up, the bulb is probably blown or there is a disconnection, so contact your distributor.
- Turn the starting switch to the ON position, operate the Hi-Lo speed range selector switch, and check that the high speed travel lamp on the monitor panel lights up.
  ★ If high speed travel lamp does not light up, the bulb is probably blown or there is a disconnection, so contact your distributor.
- Turn the starting switch to the ON position, press the parking brake switch to ON (STOP) position, and check that the parking lamp on the monitor panel lights up.
  ★ If parking lamp does not light up, the bulb is probably blown or there is a disconnection, so contact your distributor.

[10] CHECK OPERATION OF HORN, ALARM BUZZER

- Turn the starting switch to the ON position, push the horn switch inside the combination switch, and check that the horn sounds.
  ★ If the horn does not sound, there is probably a failure or disconnection in the horn, so contact your distributor.
- Turn the starting switch to the ON position, press the parking brake switch to ON (STOP) position and check that the buzzer sounds.
  ★ If the parking brake buzzer does not sound, there is probably a failure or disconnection in the buzzer, so contact your distributor.
- Turn the starting switch to the ON position, operate the travel lever to the REVERSE position and check that the backup buzzer sounds.
  ★ If the backup buzzer does not sound, there is probably a failure or disconnection in the buzzer or backup buzzer switch, so contact your distributor.

7.7 EVERY 50 HOURS SERVICE

[1] DRAIN WATER, SEDIMENT FROM FUEL TANK

★ Set a container under the fuel tank to catch the fuel.

1. Turn the plug (1) under the fuel tank to counterclockwise slightly. The water and sediment accumulated at the bottom of the tank will be drained together with the fuel.
2. After completely draining the sediment and water, tighten the plug (1) under the fuel tank.

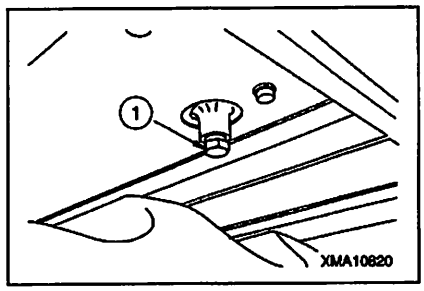

[2] DRAIN WATER, SEDIMENT FROM FUEL/WATER SEPARATOR

★ Set a container under the fuel/water separator to catch the fuel.

★Fuel/water separator is installed to inside surface of the mainframe right end (fuel tank near side).

1. Open the engine bonnet. For details, see "OPERATION 2.12 ENGINE BONNET".
2. Turn the lever (2) of the fuel/water separator (1) to CLOSE (parallel) position to stopped fuel flow.

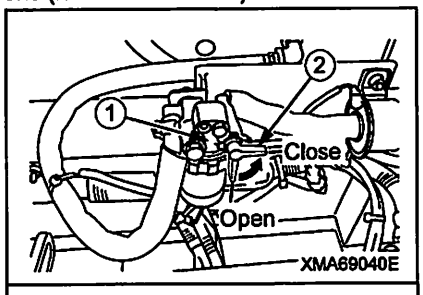

3. Loosen the ring (3) and remove the case (4).
4. Take out the fuel, water and sediment accumulated at the bottom of the case (4) and clean the case (4).
   ★ Keep the red ring (5) and spring (7) in the case (4) to do not missing.
5. Insert the red ring (5) and spring (7), and set the case (4) to original position, then tighten the ring (3).

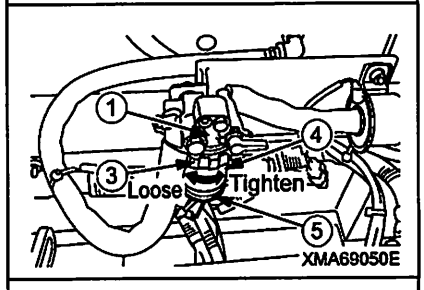

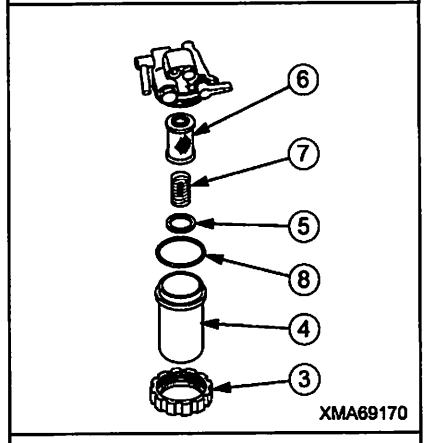

6. Turn the lever (2) of the fuel/water separator (1) to OPEN (vertical) position to flow fuel.
7. Close the engine bonnet. For details, see "OPERATION 2.12 ENGINE BONNET".

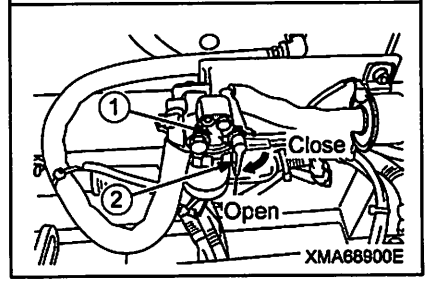

[3] CHECK LOOSEN OF FUEL PIPING AND BANDS

⚠ CAUTION

If the fuel piping is broken or the band is loose to a degree that causes fuel to leak, a fire may break out. Be sure to check for broken fuel piping and loose bands.

1. Open the engine bonnet. For details, see "OPERATION 2.12 ENGINE BONNET".
2. Remove the engine rear cover and engine upper cover. For details, see "OPERATION 2.13 ENGINE REAR COVER AND ENGINE UPPER COVER".
3. Check fuel piping components (1), (2), (3) and (4) that connect the fuel tank and the fuel injection pump for damage.
   If any piping is cracked or deformed, repair or replace it.
4. Check that bands (5) of each fuel piping are not loose.
   If any band is loose, apply oil to its threaded portion and tighten it securely.
5. Install the engine rear cover and engine upper cover. For details, see "OPERATION 2.13 ENGINE REAR COVER AND ENGINE UPPER COVER".
6. Close the engine bonnet. For details, see "OPERATION 2.12 ENGINE BONNET".

★The fuel piping components are made of rubber. Replace them with n ew ones every two years, even if they are not damaged. At the same time, also replace the bands with new ones.

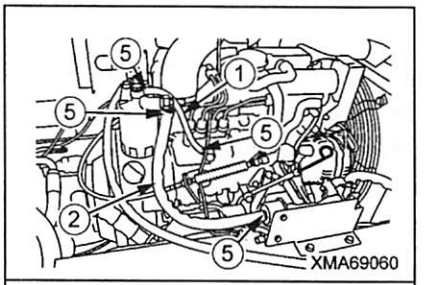

XMA69060

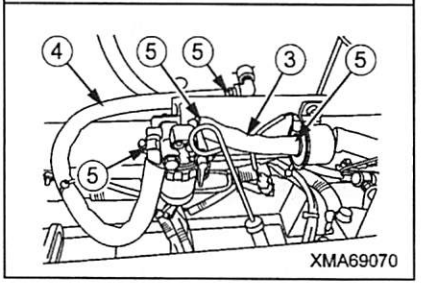

XMA69070

7.8 EVERY 100 HOURS SERVICE

★ Carry out "every-50 hours service" at the same time.

[1] CHECK BATTERY ELECTROLYTE LEVEL, ADD DISTILLED WATER

⚠ DANGER

- **If any tool touches between the battery positive (+) terminal and the chassis, there is danger that sparks will be caused. Do not put tools and other metal objects in your breast pocket. They may fall out.**
- **Be careful not to get battery electrolyte on yourself or on your clothes.**
- **Do not bring any lighted cigarette or cigarette lighter close.**

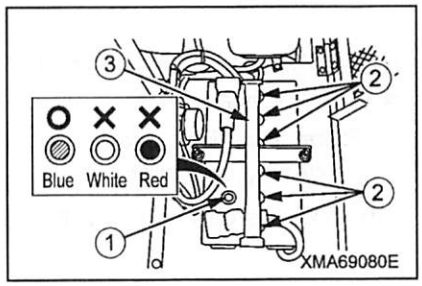

1. Open the engine bonnet. For details, see "OPERATION 2.12 ENGINE BONNET".
2. Look into indicator (1) of the battery.
   - ★If indicator (1) is in "blue", both the density and level of battery electrolyte are within the normal ranges.
   - ★If indicator (1) is in "white", the battery electrolyte density drops below the normal range.
   - ★If indicator (1) is in "red", the battery electrolyte level drops below the normal range.
3. If indicator (1) is turned out to be "white", charge the battery.
   If indicator (1) is turned out to be "red", move the band (3) of the battery and remove all caps (2) and add distilled water.
   - ★If indicator (1) does not turn "blue" even after adding water, charge the battery.
   - ★If indicator (1) still does not turn "blue" even after the charge, replace the battery.
4. Close the engine bonnet. For details, see "OPERATION 2.12 ENGINE BONNET".

7.9 EVERY 250 HOURS SERVICE

Carry out "Every-50 hours, and Every-100 hours service" at the same time.

[1] GREASE TRAVEL LEVER

★ Prepare a grease pump.

Move the boot (2) of the travel lever (1) upward, and grease the pillow block of the travel lever.

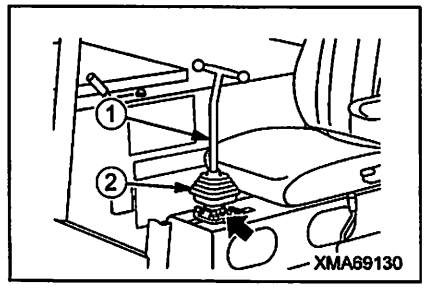

[2] GREASE TRAVEL LEVER LINKAGES

★ Prepare a grease pump.

1. Raise the dump body. For details, see "OPERATION 4. OPERATING DUMP BODY".
2. Remove the rubber cap (1) at the travel lever linkage cover.

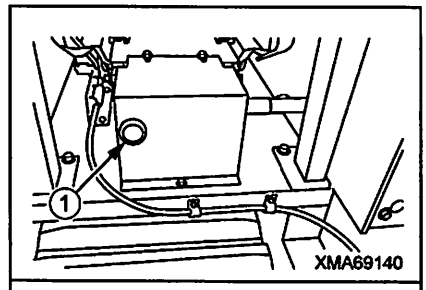

3. Grease the pillow block (2) inside the travel lever linkage cover from inspection hole.
4. After greasing, install the rubber cap (1) at the travel lever linkage cover.

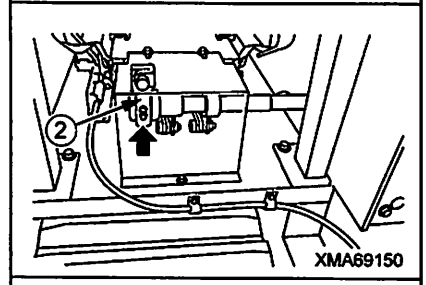

5. Grease the pillow block (3) inside the engine room.
6. After greasing, lower the dump body. For details, see "OPERATION 4. OPERATING DUMP BODY".

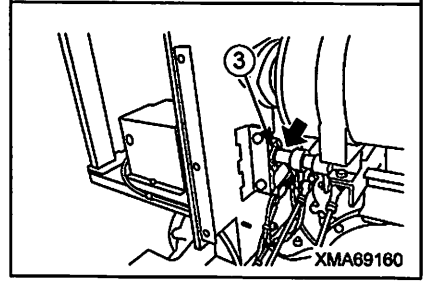

[3] GREASE ALL PARTS OF DUMP CYLINDER

★ Prepare a grease pump.

1. Raise the dump body. For details, see "OPERATION 4. OPERATING DUMP BODY".
2. Grease the bottom of the dump cylinder (1).

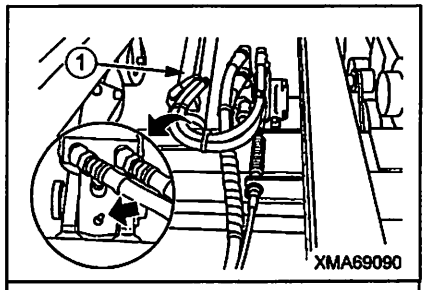

3. Grease the piston rod of the dump cylinder (1).
4. After greasing, lower the dump body. For details, see "OPERATION 4. OPERATING DUMP BODY".

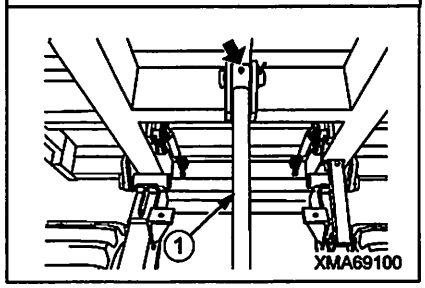

[4] GREASE DUMP BODY REAR SIDE FLAP OPERATING ROD

★ Prepare a grease pump.

1. Raise the dump body. For details, see "OPERATION 4. OPERATING DUMP BODY".
2. Grease the spring case position (left and right: 2 places) and the pin position (left and right: 6 places) of the flap operating rod (1).
3. After greasing, lower the dump body. For details, see "OPERATION 4. OPERATING DUMP BODY".

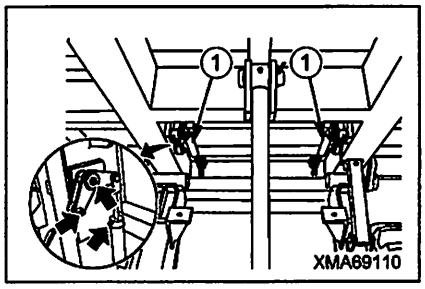

[5] GREASE DUMP BODY HINGE PIN

★ Prepare a grease pump.

1. Raise the dump body. For details, see "OPERATION 4. OPERATING DUMP BODY".
2. Grease the dump body hinge pin (1) (left and right: 2 places).
3. After greasing, lower the dump body. For details, see "OPERATION 4. OPERATING DUMP BODY".

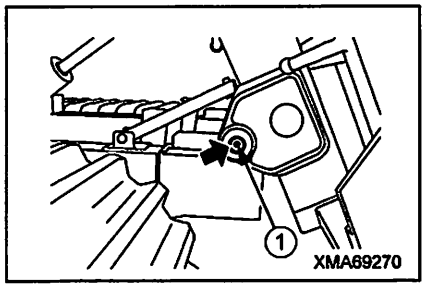

[6] GREASE TRACK ROLLER PIVOT SHAFT

★ Prepare a grease pump.

Grease the shaft position (left and right: 6 places) of the track roller pivot shaft (1).

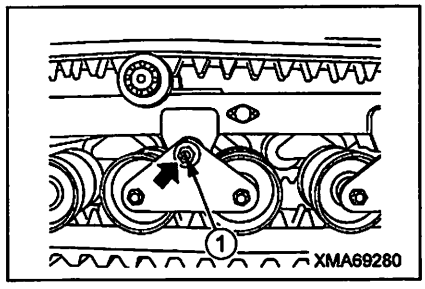

7.10 EVERY 500 HOURS SERVICE

Carry out "Every-50 hours, Every-100 hours and Every-250 hours service" at the same time.

[1] REPLACE FUEL FILTER

⚠ WARNING

- **Stop the engine and wait for the engine to cool down.**
- **Do not smoke or bring any flame close.**
- **If any fuel leaks or overflows, always wipe it up immediately. If fuel gets on any high-temperature part, it will cause fire.**

NOTICE

After replacing the fuel filter, bleed the air from the fuel circuit. For details, see "7.5 WHEN REQUIRED [6]".

★ Set a container under the fuel filter to catch the fuel.

★ Prepare a filter wrench.

★Fuel filter is installed to right side rearward of the engine.

1. Remove the engine rear cover and engine upper cover. For details, see "OPERATION 2.13 ENGINE REAR COVER AND ENGINE UPPER COVER".
2. Using the filter wrench, turn the fuel filter cartridge (1) to counterclockwise and remove it.
3. Clean the fuel filter mount, coat the packing surface of the new fuel filter cartridge (1) with engine oil, then install it to the mount.
   ★ When installing a new fuel filter cartridge, always tighten it by hand, and be careful not to tighten it too much.
4. Install the engine rear cover and engine upper cover. For details, see "OPERATION 2.13 ENGINE REAR COVER AND ENGINE UPPER COVER".

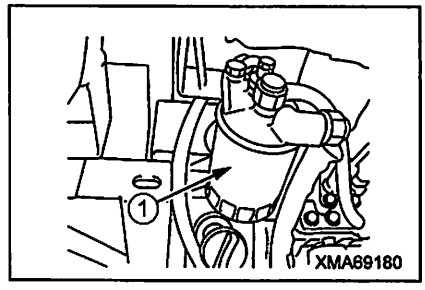

[2] CLEANING FUEL/WATER SEPARATOR

⚠ WARNING

- **Stop the engine and wait for the engine to cool down.**
- **Do not smoke or bring any flame close.**
- **If any fuel leaks or overflows, always wipe it up immediately. If fuel gets on any high-temperature part, it will cause fire.**

NOTICE

After replacing the fuel filter, bleed the air from the fuel circuit. For details, see "7.5 WHEN REQUIRED [6]".

★ Set a container under the fuel/water separator to catch the fuel.

★Fuel/water separator is installed to inside surface of the mainframe right end (fuel tank near side).

1. Open the engine bonnet. For details, see "OPERATION 2.12 ENGINE BONNET".
2. Turn the lever (2) of the fuel/water separator (1) to CLOSE (parallel) position to stopped fuel flow.

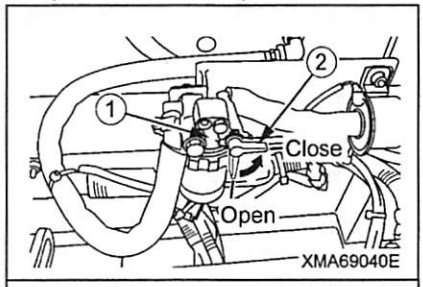

3. Loosen the ring (3) and remove the case (4).
4. Take out the fuel, water and sediment accumulated at the bottom of the case (4) and clean the case (4).
   ★ Keep the red ring (5) and spring (7) in the case (4) to do not missing.

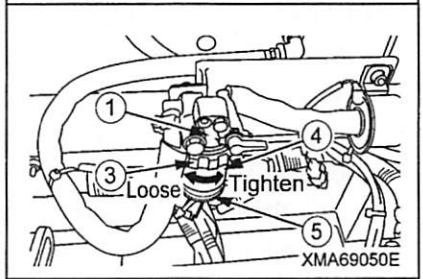

5. Remove the screen (6) from the filter head, then using diesel fuel or etc., and clean the screen (6) carefully.
6. After cleaning the screen (6), install the screen (6) to the filter head.
7. Insert the red ring (5) and spring (7) to the case (4), and set the case (4) to original position, then tighten the ring (3).

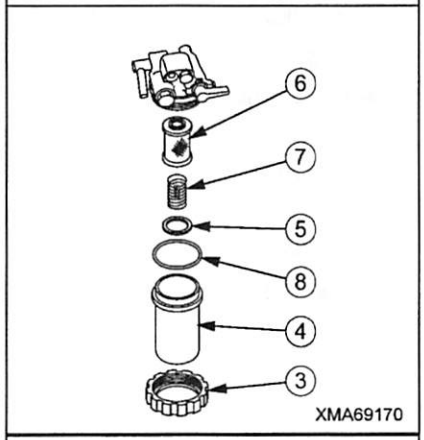

8. Turn the lever (2) of the fuel/water separator (1) to OPEN (vertical) position to flow fuel.
9. Close the engine bonnet. For details, see "OPERATION 2.12 ENGINE BONNET".

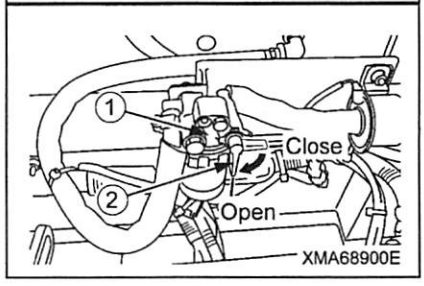

[3] CHANGE ENGINE LUBRICATING OIL, REPLACE ENGINE OIL FILTER

⚠ WARNING

- **Stop the engine and wait for the temperature to go down.**
- **After adding oil, tighten the cap and drain plug securely, then wipe up any spilled oil.**

★ Set a container under the engine to catch the oil.

★ Prepare a filter wrench.

★Engine oil filter is installed to right side forward of the engine.

1. Go under the machine and remove the drain plug (3) from the engine oil pan and drain the oil.
   ★ Set the container under the engine oil pan to catch the oil.
   ★ Be careful not to get oil on yourself.
2. Check the drained oil.
   ★ If there are large amounts of metal particles or dirt in the drained oil, please contact your distributor.
3. After completely draining the oil, tighten the drain plug (3).
4. Using the filter wrench, turn the oil filter cartridge (4) to counter-clockwise and remove it.
5. Clean the oil filter mount, coat the packing surface of the new oil filter cartridge with engine oil, then install it to the mount.
   ★ Fill the Engine oil into the new filter cartridge.
   ★ When installing a new filter cartridge, always tighten it by hand, and be careful not to tighten it too much.
6. Open the engine bonnet. For details, see "OPERATION 2.12 ENGINE BONNET".
7. Remove the filler cap (2) and add the specified amount of engine oil.
   ★ For details of the oil to use, see "3. USE OF FUEL AND LUBRICANTS ACCORDING TO AMBIENT TEMPERATURE".
   ★ Engine oil refill amount: 11.2 liters (2.96 US gal, 2.46 UK gal)
   ★ Use a container with an attached hose when filling with oil.
8. Start the engine, run at idling for several minutes, then check that the oil is within the range between the top and bottom marks on the engine oil level gauge. For details, see "7.6 CHECK BEFORE STARTING".
9. Close the engine bonnet. For details, see "OPERATION 2.12 ENGINE BONNET".

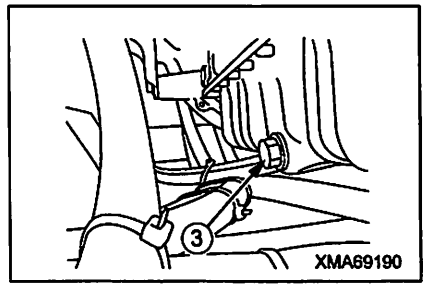

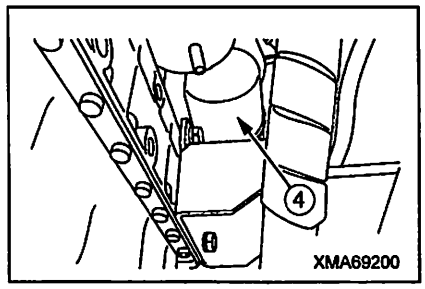

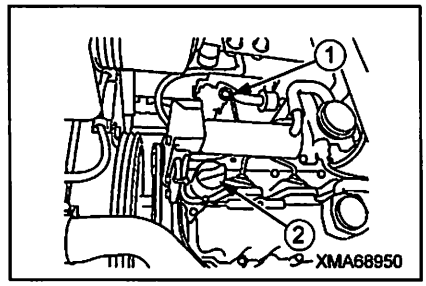

[4] REPLACE HYDRAULIC LINE FILTER

⚠ WARNING

- **Stop the engine and wait for the engine to cool down.**
- **Loosen the cap of the hydraulic tank slowly to release the internal pressure completely, then remove the cap.**
- **Operate the travel lever and dump control lever 2 or 3 times to the end of their stroke to completely release the remaining pressure in the hydraulic circuit.**

NOTICE

When replacing the hydraulic line filter, always change the oil in the hydraulic tank at the same time.

★ Set a container under the hydraulic line filter to catch the oil.

★ Prepare a filter wrench.

1. Raise the dump body. For details, see "OPERATION 4. OPERATING DUMP BODY".
2. Using the filter wrench, turn the line filter cartridge (1) to counter-clockwise and remove it.
3. Clean the oil filter mount, coat the packing surface of the new oil filter cartridge with engine oil, then install it to the mount.
   ★ Fill the Hydraulic oil into the new filter cartridge.
   ★ When installing a new filter cartridge, always tighten it by your hand, and be careful not to tighten it too much.
4. Lower the dump body. For details, see "OPERATION 4. OPERATING DUMP BODY".

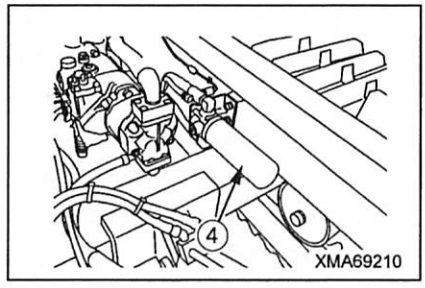

[5] CHANGE OIL IN HYDRAULIC TANK

⚠ WARNING

- **Stop the engine and wait for the engine to cool down.**
- **Loosen the oil filler cap slowly to release the pressure inside the hydraulic tank, then remove the cap.**
- **Make full stroke operations of the travel lever and the damp control lever to release the remaining pressure inside the hydraulic circuits totally.**
- **After adding oil, tighten the cap and drain plug securely, then wipe up any spilled oil.**

NOTICE

- **When changing the oil in the hydraulic tank, always replace the hydraulic line filter at the same time.**
- **Always replace the O-ring used inspection cover inside the hydraulic tank with a new O-ring.**

★ Set a container under the hydraulic tank to catch the oil.

1. Remove the filler plug (2) on the hydraulic tank.
2. Turn drain plug (3) at the bottom of the hydraulic tank to counterclockwise and drain the oil from the hydraulic tank.
   ★ Set the container under the hydraulic tank to catch the oil.
   ★ Be careful not to get oil on yourself.
3. Inspect the drained oil.
   ★ If there are large amounts of metal particles or dirt in the drained oil, please contact your distributor.
4. After completely draining the oil, tighten drain plug (3).
5. Remove the 6 bolts, then remove the inspection cover (4).

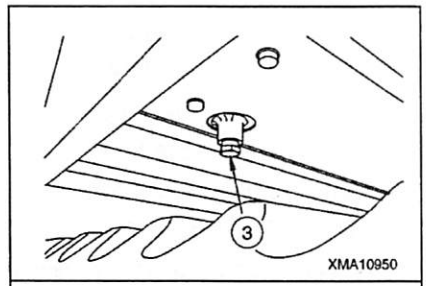

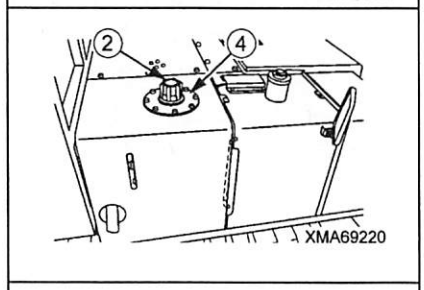

6. Take out the oil strainer (5) inside the hydraulic tank, then wash it in diesel oil.
7. Install the oil strainer (5) inside the hydraulic tank, set new O-ring (6) to the hydraulic tank, then install inspection cover (4) and tighten the bolts.
8. Fill with hydraulic oil through the oil filler.
   ★ For details of the hydraulic oil to use, see "3. USE OF FUEL, COOLANT, AND LUBRICANT ACCORDING TO AMBIENT TEMPERATURE".
   ★ Hydraulic oil refill amount: 55 liters (14.53 US gal, 12.10 UK gal)
   ★ Use a container with an attached hose when filling with oil.
9. Check that the oil level is between the top and bottom red lines on the level gauge at the rear of the hydraulic tank. For details, see "7.6 CHECK BEFORE STARTING [5]".

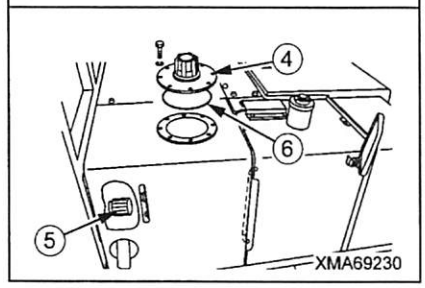

7.11 EVERY 1500 HOURS SERVICE

Carry out "Every-50 hours, Every-250 hours and Every-500 hours service" at the same time.

[1] CHANGE OIL INSIDE TRAVEL MOTOR REDUCTION GEAR CASE

⚠ WARNING

- **Stop the engine and wait for the oil temperature to go down.**
- **After adding oil, tighten the plugs securely and wipe up any spilled oil.**

★ Set a container under the travel motor reduction gear case to catch the oil.

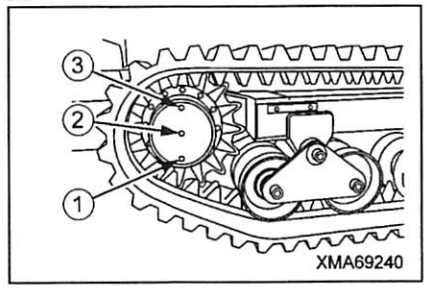

1. Drive the machine forward or backward to position drain plug (1) of the reduction gear case at the bottom, then stop the engine.
2. Remove the oil filler plug (3), oil level inspection plug (2), and drain plug (1), and drain the oil from the case.
   ★ Set the container under the travel motor to catch the oil.
3. Inspect the drained oil.
   ★ If there are large amounts of metal particles or dirt in the drained oil, please contact your distributor.
4. After the oil has been completely drained, tighten drain plug (1).
5. Add the specified amount of gear oil through the oil filler plug (3), and check that oil comes out from the oil level inspection plug (2) hole.
   ★ For details of the gear oil, see "3. USE OF FUEL AND LUBRICANTS ACCORDING TO AMBIENT TEMPERATURE".
   ★ Specified amount of gear oil: 1.3 liters (0.34 US gal, 0.29 UK gal)
6. Tighten the oil filler plug (3) and the oil level inspection plug (2).

SPECIFICATIONS

1. DIMENSION DRAWING	4-2
2 .SPECIFICATIONS TABLE	4-3

1. DIMENSION DRAWING

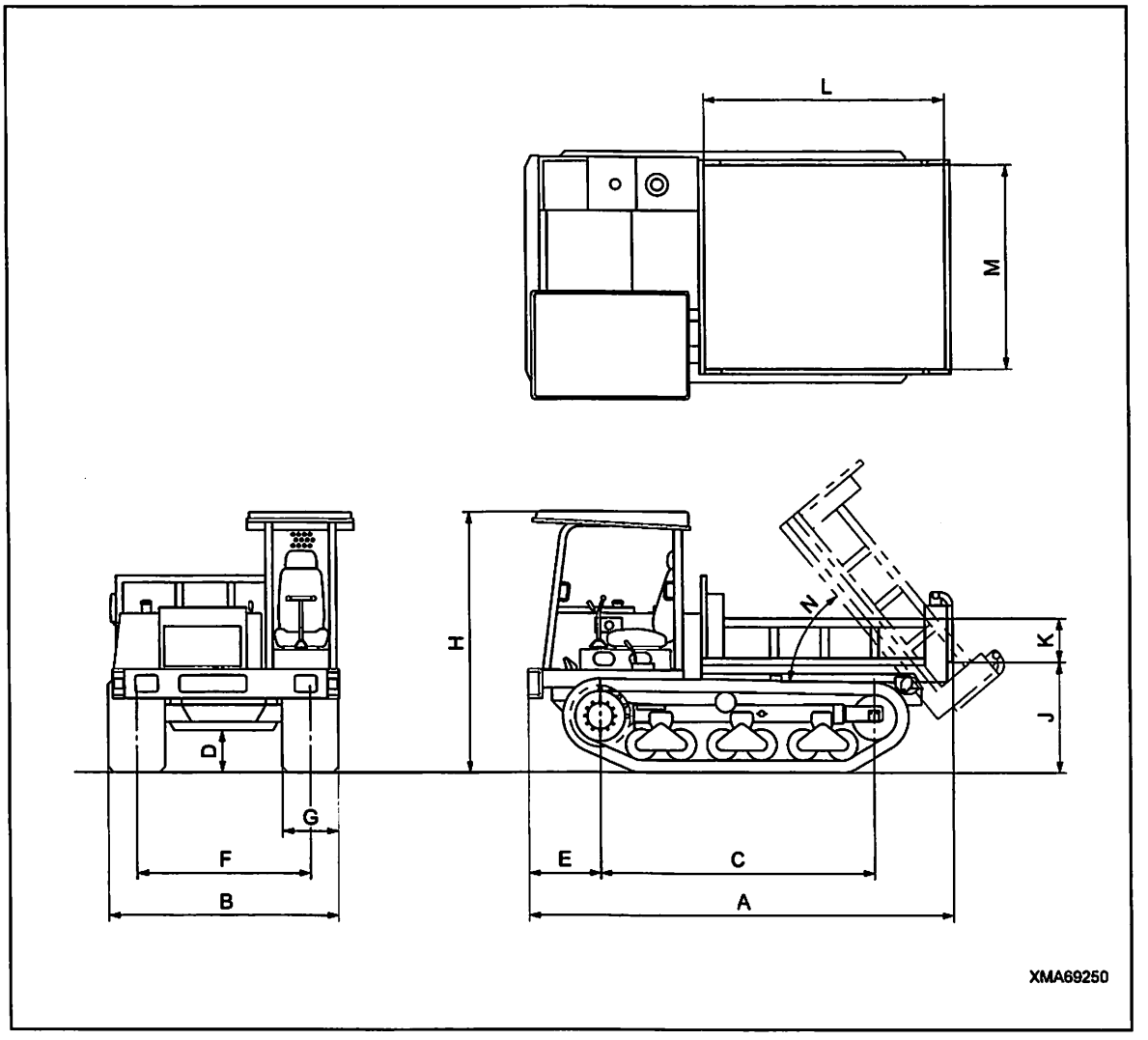

2 .SPECIFICATIONS TABLE

Model name			MST-600VD
A	Overall length	(mm)	3,790
B	Overall width	(mm)	1,950
C	Distance between center of idler and center of sprocket	(mm)	2,440
D	Min. ground clearance	(mm)	350
E	Distance between front of machine and center of sprocket	(mm)	640
F	Track gauge	(mm)	1,450
G	Track width	(mm)	500
H	Overall height	(mm)	2,270
J	Distance between ground and bottom of dump body	(mm)	1,350
K	Dump body height	(mm)	350
L	Dump body length	(mm)	2,150
M	Dump body width	(mm)	1,700
N	Max. dumping angle	(deg)	60
Mass (weight) of machine		(kg)	4,000
Max. payload		(kg)	3,300
Drive system			Fully hydraulic system (HST)
Speed change system			Step-less speed change
Travel speed (at high speed range)		(km/h)	0 – 11km/h
Travel speed (at low speed range)		(km/h)	0 – 6.6km/h
Gradeability		(%)	57
Ground contact pressure (unloaded)		(kPa {kg·f/cm^2})	15.7 {0.16}
Engine model			Kubota V3307-DI-TE3
Engine type			Water-cooled, 4-cycle, in-line upright Direct injection type, with turbocharger
No. of cylinders – bore x stroke		(mm)	4 – 94 x 120
Piston displacement		(Liter)	3.31
Rated output/engine speed		(kW/min^{-1})	53.7/2600
Max. torque/engine speed		(N·m/min^{-1})	46.6/2600
Fuel			Diesel oil
Fuel consumption ratio		(Liter)	75
Battery			12V, 64Ah

RUBBER CRAWLER CARRIER MST−600VD

OPERATION AND MAINTENANCE MANUAL

Document No.AE10600VD3-01
First edition: June 15, 2011

Issued by Morooka Co., Ltd.
358 Shoubeisindencho, Ryugasaki,
Ibaraki 301-0034,
Japan

No part of this manual can be reproduced in any from without permission

OPERATOR'S MANUAL

ENGLISH

KUBOTA
DIESEL ENGINE

MODELS V2607-DI-E3-B
V2607-DI-T-E3-B
V3307-DI-T-E3-B

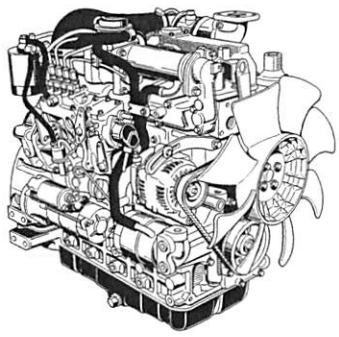

1ABAHAAAP0140

[V2607-DI-E3-B, V2607-DI-T-E3-B]

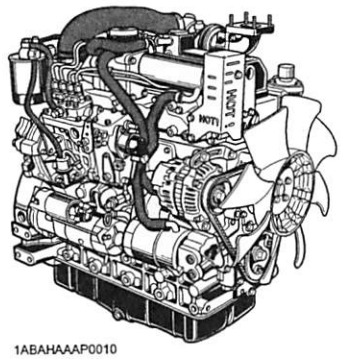

1ABAHAAAP0010

[V3307-DI-T-E3-B]

1G777-8911-7

READ AND SAVE THIS MANUAL

Kubota

California Proposition 65

⚠ WARNING ⚠

Engine exhaust, some of its constituents, certain vehicle components and fluids, contain or emit chemicals known to the State of California to cause cancer and birth defects or other reproductive harm.

ENGLISH

FOREWORD

You are now the proud owner of a KUBOTA Engine. This engine is a product of KUBOTA quality engineering and manufacturing. It is made of fine materials and under a rigid quality control system. It will give you long, satisfactory service. To obtain the best use of your engine, please read this manual carefully. It will help you become familiar with the operation of the engine and contains many helpful hints about engine maintenance. It is KUBOTA's policy to utilize as quickly as possible every advance in our research. The immediate use of new techniques in the manufacture of products may cause some small parts of this manual to be outdated. KUBOTA distributors and dealers will have the most up-to-date information. Please do not hesitate to consult with them.

⚠ SAFETY FIRST

This symbol, the industry's "Safety Alert Symbol", is used throughout this manual and on labels on the machine itself to warn of the possibility of personal injury. Read these instructions carefully. It is essential that you read the instructions and safety regulations before you attempt to assemble or use this unit.

⚠ **DANGER :** Indicates an imminently hazardous situation which, if not avoided, will result in death or serious injury.

⚠ **WARNING :** Indicates a potentially hazardous situation which, if not avoided, COULD result in death or serious injury.

⚠ **CAUTION :** Indicates a potentially hazardous situation which, if not avoided, MAY result in minor or moderate injury.

IMPORTANT : Indicates that equipment or property damage could result if instructions are not followed.

NOTE : Gives helpful information.

CONTENTS

ENGLISH

⚠SAFE OPERATION 1
SERVICING OF THE ENGINE 1
NAMES OF PARTS 2
PRE-OPERATION CHECK 3
BREAK-IN 3
DAILY CHECK 3
OPERATING THE ENGINE 4
STARTING THE ENGINE(NORMAL) 4
COLD WEATHER STARTING 5
STOPPING THE ENGINE 6
CHECKS DURING OPERATION 6
Radiator Cooling water(Coolant) 6
Oil pressure lamp 7
Charge lamp 7
Fuel 7
Color of exhaust 7
Immediately stop the engine if; 7
REVERSED ENGINE REVOLUTION AND REMEDIES 7
How to tell when the engine starts running backwards 7
Remedies 7
MAINTENANCE 8
SERVICE INTERVALS 9
PERIODIC SERVICE 11
FUEL 11
Fuel level check and refueling 11
Air bleeding the fuel system 11
Checking the fuel pipes 13
Cleaning the fuel filter pot 13
Fuel filter cartridge replacement 14
ENGINE OIL 14
Checking oil level and adding engine oil 14
Changing engine oil 15
Replacing the oil filter cartridge 16
RADIATOR 16
Checking coolant level, adding coolant 17
Changing coolant 18
Remedies for quick decrease of coolant 18
Checking radiator hoses and clamp bands 18
Precaution at overheating 18
Cleaning radiator core(outside) 18
Anti-freeze 19
AIR CLEANER 20
Cleaning Primary Air Filter Element 20
Evacuator valve 20

ENGLISH

CONTENTS

For the air cleaner with a dust cup (optional) 20
Dust indicator (optional) 21
ELECTRIC WIRING 21
FAN BELT 21
Adjusting Fan Belt Tension 21
CARRIAGE AND STORAGE 22
CARRIAGE 22
STORAGE 22
TROUBLESHOOTING 23
SPECIFICATIONS 25
WIRING DIAGRAMS 26

ENGLISH

SAFE OPERATION

Careful operation is your best assurance against an accident. Read and understand this section carefully before operating the engine. All operators, no matter how much experience they may have, should read this and other related manuals before operating the engine or any equipment attached to it. It is the owner's obligation to provide all operators with this information and instruct them on safe operation.

Be sure to observe the following for safe operation.

1. OBSERVE SAFETY INSTRUCTIONS

- Read and understand carefully this "OPERATOR'S MANUAL" and "LABELS ON THE ENGINE" before attempting to start and operate the engine.
- Learn how to operate and work safely. Know your equipment and its limitations. Always keep the engine in good condition.
- Before allowing other people to use your engine, explain how to operate and have them read this manual before operation.
- DO NOT modify the engine. UNAUTHORIZED MODIFICATIONS to the engine may impair the function and/or safety and affect engine life. If the engine does not perform properly, consult your local Kubota Engine Distributor first.

1AAACAAAP008B

2. WEAR SAFE CLOTHING AND PERSONAL PROTECTIVE EQUIPMENT (PPE)

- DO NOT wear loose, torn or bulky clothing around the machine that may catch on working controls and projections or into fans, pulleys and other moving parts causing personal injury.
- Use additional safety items-PPE, e.g. hard hat, safety protection, safety goggles, gloves, etc., as appropriate or required.
- DO NOT operate the machine or any equipment attached to it while under the influence of alcohol, medication, or other drugs, or while fatigued.
- DO NOT wear radio or music headphones while operating the engine.

1AEAAAAAP0130

3. CHECK BEFORE STARTING & OPERATING THE ENGINE

- Be sure to inspect the engine before operation. Do not operate the engine if there is something wrong with it. Repair it immediately.
- Ensure all guards and shields are in place before operating the engine. Replace any that are damaged or missing.
- Check to see that you and others are a safe distance from the engine before starting.
- Always keep the engine at least 3 feet (1 meter) away from buildings and other facilities.
- DO NOT allow children or livestock to approach the machine while the engine is running.
- DO NOT start the engine by shorting across starter terminals. The machine may start in gear and move. Do not bypass or defeat any safety devices.

1BAABADAP0010

4. KEEP THE ENGINE AND SURROUNDINGS CLEAN

- Be sure to stop the engine before cleaning.
- Keep the engine clean and free of accumulated dirt, grease and trash to avoid a fire. Store flammable fluids in proper containers and cabinets away from sparks and heat.
- Check for and repair leaks immediately.
- DO NOT stop the engine without idling; Allow the engine to cool down, first. Keep the engine idling for about 5 minutes before stopping unless there is a safety problem that requires immediate shut down.

1AEAAAAAP0120

5. SAFE HANDLING OF FUEL AND LUBRICANTS -KEEP AWAY FROM FIRE

- Always stop the engine before refueling and/or lubricating.
- DO NOT smoke or allow flames or sparks in your work area. Fuel is extremely flammable and explosive under certain conditions.
- Refuel at a well ventilated and open place. When fuel and/or lubricants are spilled, refuel after letting the engine cool down.
- DO NOT mix gasoline or alcohol with diesel fuel. The mixture can cause a fire or severe engine damage.
- Do not use unapproved containers e.g. buckets, bottles, jars. Use approved fuel storage containers and dispensers.

1AAACAAAP001A

6. EXHAUST GASES & FIRE PREVENTION

- Engine exhaust fumes can be very harmful if allowed to accumulate. Be sure to run the engine in a well ventilated location and where there are no people or livestock near the engine.
- The exhaust gas from the muffler is very hot. To prevent a fire, do not expose dry grass, mowed grass, oil or any other combustible materials to exhaust gas. Keep the engine and muffler clean at all times.
- To avoid a fire, be alert for leaks of flammable substances from hoses and lines. Be sure to check for leaks from hoses or pipes, such as fuel and hydraulic fluid by following the maintenance check list.
- To avoid a fire, do not short across power cables and wires. Check to see that all power cables and wirings are in good condition. Keep all electrical connections clean. Bare wire or frayed insulation can cause a dangerous electrical shock and personal injury.

7. ESCAPING FLUID

- Relieve all pressure in the air, the oil and the cooling systems before disconnecting any lines, fittings or related items.
- Be cautious of possible pressure relief when disconnecting any device from a pressurized system that utilizes pressure. DO NOT check for pressure leaks with your hand. High pressure oil or fuel can cause personal injury.
- Escaping fluid under pressure has sufficient force to penetrate skin causing serious personal injury.
- Fluid escaping from pinholes may be invisible. Use a piece of cardboard or wood to search for suspected leaks: do not use hands and body. Use safety goggles or other eye protection when checking for leaks.
- If injured by escaping fluid, see a medical doctor immediately. This fluid can produce gangrene or severe allergic reaction.

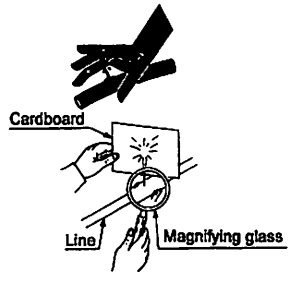

1ABAAAAAP120F

ENGLISH

8. CAUTIONS AGAINST BURNS & BATTERY EXPLOSION

- To avoid burns, be cautious of hot components, e.g. muffler, muffler cover, radiator, hoses, engine body, coolants, engine oil, EGR, etc. during operation and after the engine has been shut off.
- DO NOT remove the radiator cap while the engine is running or immediately after stopping. Otherwise hot water will spout out from the radiator. Wait until the radiator is completely cool to the touch before removing the cap. Wear safety goggles.
- Be sure to close the coolant drain valve, secure the pressure cap, and fasten the pipe band before operating. If these parts are taken off, or loosened, it will result in serious personal injury.
- The battery presents an explosive hazard. When the battery is being charged, hydrogen and oxygen gases are extremely explosive.
- DO NOT use or charge the battery if its fluid level is below the LOWER mark.
  Otherwise, the component parts may deteriorate earlier than expected, which may shorten the service life or cause an explosion. Immediately, add distilled water until the fluid level is between the UPPER and LOWER marks.
- Keep sparks and open flames away from the battery, especially during charging. DO NOT strike a match near the battery.
- DO NOT check the battery charge by placing a metal object across the terminals. Use a voltmeter or hydrometer.
- DO NOT charge a frozen battery. There is a risk of explosion. When frozen, warm the battery up to at least 16°C (61°F).

1AEABAAAP0080

1AAAAABAP0230

1ARAEAAAP0520

9. KEEP HANDS AND BODY AWAY FROM ROTATING PARTS

- Be sure to stop the engine before checking or adjusting the belt tension and cooling fan.
- Keep your hands and body away from rotating parts, such as the cooling fan, V-belt, fan drive pulley or flywheel. Contact with rotating parts can cause severe personal injury.
- DO NOT run the engine without safety guards. Install safety guards securely before operation.

1ABAAAAAP1470

10.ANTI-FREEZE & DISPOSAL OF FLUIDS

- Anti-freeze contains poison. Wear rubber gloves to avoid personal injury. In case of contact with skin, wash it off immediately.
- DO NOT mix different types of Anti-freeze. The mixture can produce a chemical reaction causing harmful substances. Use approved or genuine KUBOTA Anti-freeze.
- Be mindful of the environment and the ecology. Before draining any fluids, determine the correct way to dispose of them. Observe the relevant environmental protection regulations when disposing of oil, fuel, coolant, brake fluid, filters and batteries.
- When draining fluids from the engine, place a suitable container underneath the engine body.
- DO NOT pour waste onto the ground, down a drain, or into any water source. Dispose of waste fluids according to environmental regulations.

1BJABAAAP0190

1BJABAAAP0180

11.CONDUCTING SAFETY CHECKS & MAINTENANCE

- When inspecting the engine or servicing, place the engine on a large flat surface. DO NOT work on anything that is supported ONLY by lift jacks or a hoist. Always use blocks or the correct stands to support the engine before servicing.
- Disconnect the battery from the engine before conducting service. Put a "DO NOT OPERATE!" tag on the key switch to avoid accidental starting.
- To avoid sparks from an accidental short circuit always disconnect the battery's ground cable (-) first and reconnect it last.
- Be sure to stop the engine and remove the key when conducting daily and periodic maintenance, service and cleaning.
- Check or conduct maintenance after the engine, coolant, muffler, or muffler cover have cooled off completely.
- Always use the appropriate tools and fixtures. Verify that they are in good condition before performing any service work. Make sure you understand how to use them before service.
- Use ONLY correct engine barring techniques for manually rotating the engine. DO NOT attempt to rotate the engine by pulling or prying on the cooling fan and V-belt. This practice can cause serious personal injury or premature damage to the cooling fan and belt.

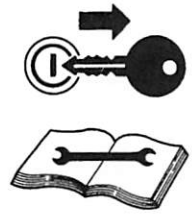

1BJABAAAP0200

- Replace fuel pipes and lubricant pipes with their hose clamps every 2 years or earlier whether they are damaged or not. They are made of rubber and age gradually.
- When servicing is performed together by two or more persons, take care to perform all work safely.
- Keep a first aid kit and fire extinguisher handy at all times.

12. WARNING AND CAUTION LABELS

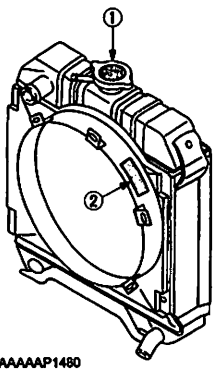

1ABAAAAAP1480

① Part No.19077-8724-1 or 16667-8724-1
(55mm in diameter) (37mm in diameter)

1ABACAAAP036K

② Part No.TA040-4957-1
Stay clear of engine
fan and fan belt

1AGAMAAAP2620

13. CARE OF WARNING AND CAUTION LABELS

1. Keep warning and caution labels clean and free from obstructing material.
2. Clean warning and caution labels with soap and water, dry with a soft cloth.
3. Replace damaged or missing warning and caution labels with new labels from your local KUBOTA dealer.
4. If a component with warning and caution label(s) affixed is replaced with a new part, make sure the new label(s) is (are) attached in the same location(s) as the replaced component.
5. Mount new warning and caution labels by applying to a clean dry surface and pressing any bubbles to the outside edge.

SERVICING OF THE ENGINE

Your dealer is interested in your new engine and has the desire to help you get the most value from it. After reading this manual thoroughly, you will find that you can do some of the regular maintenance yourself.
However, when in need of parts or major service, be sure to see your KUBOTA dealer.
For service, contact the KUBOTA Dealership from which you purchased your engine or your local KUBOTA dealer.
When in need of parts, be prepared to give your dealer the engine serial number.
Locate the serial number now and record them in the space provided.

	Type	Serial No.
Engine		
Date of Purchase		
Name of Dealer		
(To be filled in by purchaser)		

[V2607-DI-E3-B, V2607-DI-T-E3-B]

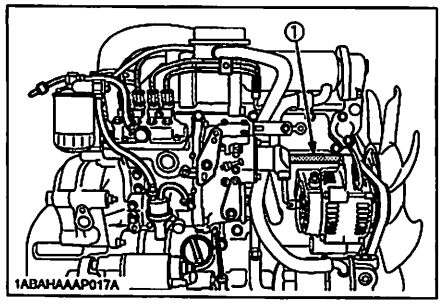

[V3307-DI-T-E3-B]

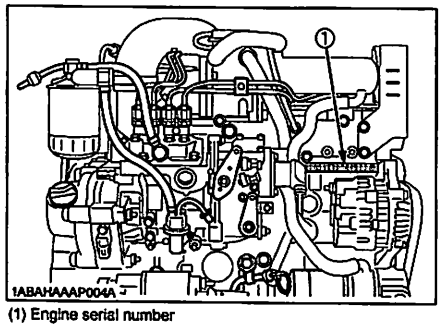

(1) Engine serial number

ENGLISH

NAMES OF PARTS

[V2607-DI-E3-B, V2607-DI-T-E3-B]

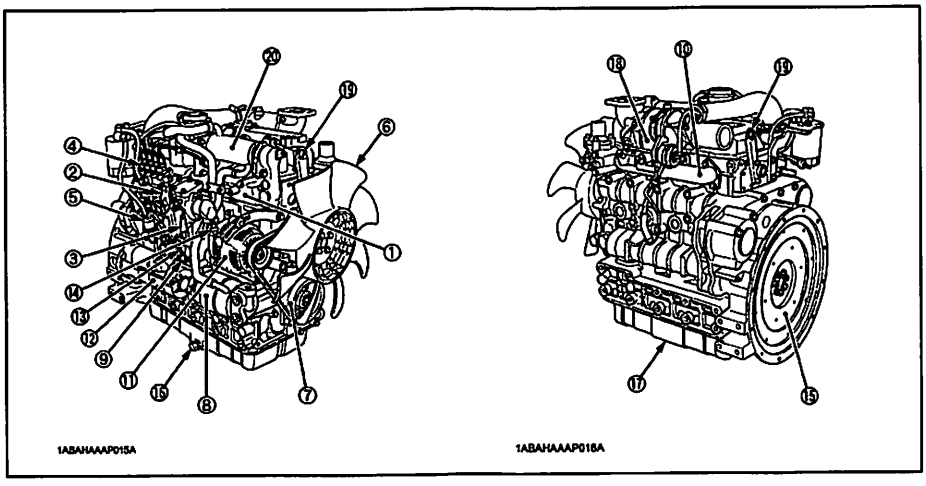

[V3307-DI-T-E3-B]

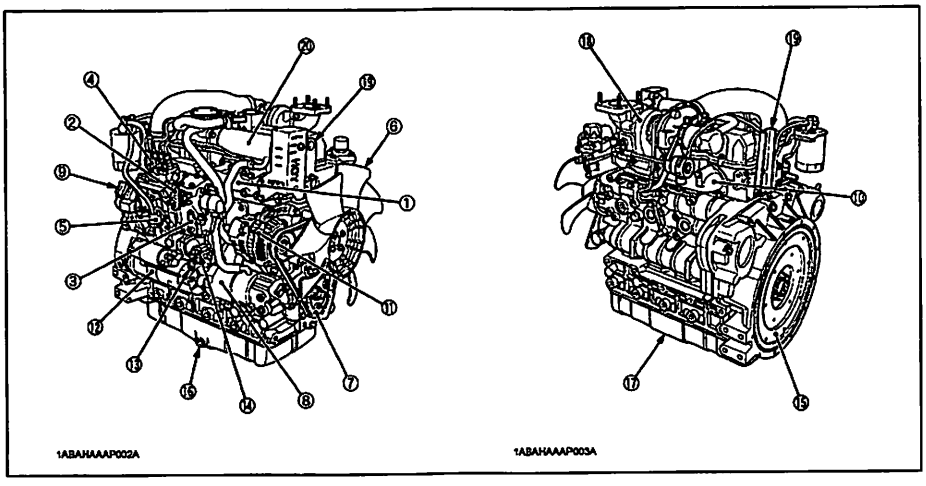

(1) Intake manifold
(2) Speed control lever
(3) Engine stop lever
(4) Injection pump
(5) Fuel feed pump
(6) Cooling fan
(7) Fan drive pulley
(8) Oil filter cartridge
(9) Oil filler plug
(10) Exhaust manifold
(11) Alternator
(12) Starter
(13) Oil level gauge
(14) Oil pressure switch
(15) Flywheel
(16) Oil drain plug
(17) Oil pan
(18) Turbo charger
(19) Engine hook
(20) EGR cooler

PRE-OPERATION CHECK

BREAK-IN

During the engine break-in period, observe the following by all means:

1. Change engine oil and oil filter cartridge after the first 50 hours of operation (See **"ENGINE OIL"** in **"PERIODIC SERVICE"** Section).
2. When ambient temperature is low, operate the machine after the engine has been completely warmed up.

DAILY CHECK

To prevent trouble from occurring, it is important to know the conditions of the engine well. Check it before starting.

⚠ CAUTION

To avoid personal injury:

- **Be sure to install shields and safeguards attached to the engine when operating.**
- **Stop the engine at a flat and wide space when checking.**
- **Keep dust or fuel away from the battery, wiring, muffler and engine to prevent a fire. Check and clear them before operating everyday. Pay attention to the heat of the exhaust pipe or exhaust gas so that it can not ignite trash.**

Item		Ref. page
1. Parts which had trouble in previous operation		-
2. By walking around the machine	(1) Oil or water leaks	14, 16
	(2) Engine oil level and contamination	14
	(3) Amount of fuel	11
	(4) Amount of coolant	17
	(5) Dust in air cleaner dust cup	20
	(6) Damaged parts and loosened bolts and nuts	-
3. By inserting the key into the starter switch	(1) Proper functions of meters and pilot lamps; no stains on these parts	-
	(2) Proper function of glow lamp timer	-
4. By starting the engine	(1) Color of exhaust fumes	7
	(2) Unusual engine noise	7

ENGLISH

OPERATING THE ENGINE

STARTING THE ENGINE(NORMAL)

⚠ CAUTION

To avoid personal injury:

- **Do not allow children to approach the machine while the engine is running.**
- **Be sure to install the machine on which the engine is installed, on a flat place.**
- **Do not run the engine on gradients.**
- **Do not run the engine in an enclosed area. Exhaust gas can cause air pollution and exhaust gas poisoning.**
- **Keep your hands away from rotating parts (such as fan, pulley, belt, flywheel etc.) during operation.**
- **Do not operate the machine while under the influence of alcohol or drugs.**
- **Do not wear loose, torn or bulky clothing around the machine. It may catch on moving parts or controls, leading to the risk of accident. Use additional safety items, e.g. hard hat, safety boots or shoes, eye and hearing protection, gloves, etc., as appropriate or required.**
- **Do not wear radio or music headphones while operating engine.**
- **Check to see if it is safe around the engine before starting.**
- **Reinstall safeguards and shields securely and clear all maintenance tools when starting the engine after maintenance.**

IMPORTANT :

- Do not use ether or any starting fluid for starting the engine, or a severe damage will occur.
- When starting the engine after a long storage (of more than 3 months), first set the stop lever to the "STOP" position and then activate the starter for about 10 seconds to allow oil to reach every engine part.

1. Set the fuel lever to the "ON" position.

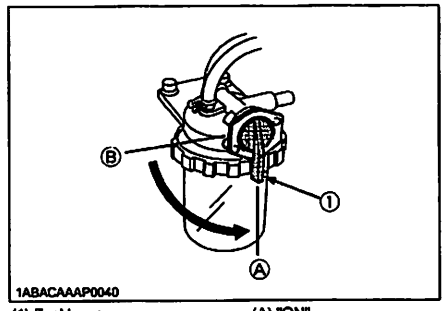

1ABACAAAP0040

(1) Fuel lever (A) "ON" (B) "OFF"

2. Place the engine stop lever to the "START" position.

3. Place the speed control lever at more than half "OPERATION".

[V2607-DI-E3-B, V2607-DI-T-E3-B]

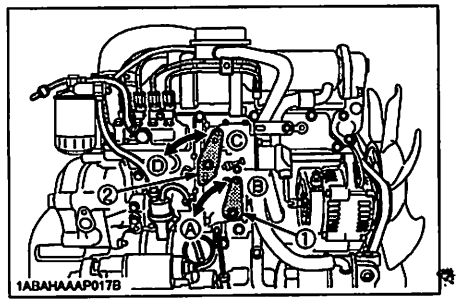

1ABAHAAAP017B

[V3307-DI-T-E3-B]

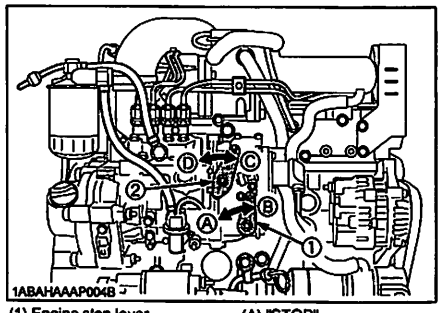

(1) Engine stop lever
(2) Speed Control lever

(A) "STOP"
(B) "START"
(C) "IDLING"
(D) "OPERATION"

4. Insert the key into the key switch and turn it "ON".

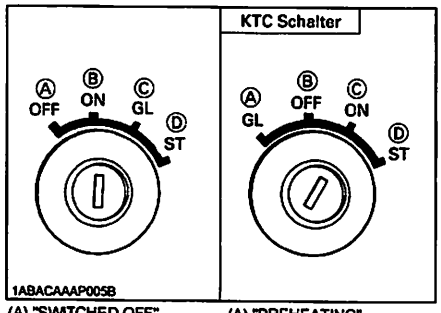

(A) "SWITCHED OFF"
(B) "OPERATION"
(C) "PREHEATING"
(D) "STARTING"

(A) "PREHEATING"
(B) "SWITCHED OFF"
(C) "OPERATION"
(D) "STARTING"

5. Turn the starter switch to the "PREHEATING" position to allow the glow lamp to redden.

NOTE :
(with lamp timer in use)
- The glow lamp goes out in about 5 seconds when the lamp timer is up. Refer to this for pre-heating. Even with the glow lamp off, the glow plug can be pre-heated by turning the starter switch to the "PREHEATING" position.

6. Turn the key to the "STARTING" position and the engine should start. Release the key immediately when the engine starts.

7. Check to see that the oil pressure lamp and charge lamp are off. If the lamps are still on, immediately stop the engine, and determine the cause.
(See **"CHECKS DURING OPERATION"** in **"OPERATING THE ENGINE"** Section)

NOTE :
- If the oil pressure lamp should be still on, immediately stop the engine and check;
  - if there is enough engine oil.
  - if the engine oil has dirt in it.
  - if the wiring is faulty.

8. Warm up the engine at medium speed without load.

IMPORTANT :
- If the glow lamp should redden too quickly or too slowly, immediately ask your KUBOTA dealer to check and repair it.
- If the engine does not catch or start at 10 seconds after the starter switch is set at "STARTING" position, wait for another 30 seconds and then begin the engine starting sequence again. Do not allow the starter motor to run continuously for more than 20 seconds.

COLD WEATHER STARTING

If the ambient temperature is below -5°C(23°F)* and the engine is very cold, start it in the following manner:
Take steps (1) through (4) above.

5. Turn the key to the "PREHEATING (GLOW)" position and keep it there for a certain period mentioned below.

IMPORTANT :
- Shown below are the standard preheating times for various temperatures. This operation, however, is not required, when the engine is warmed up.

Ambient temperature	Preheating time
Above 10°C (50°F)	NO NEED
10°C (50°F) to -5°C (23°F)	Approx. 5 seconds
*Below -5°C (23°F)	Approx. 10 seconds
Limit of continuous use	20 seconds

ENGLISH

6. **Turn the key to the "ST (STARTING)" position and the engine should start.** (If the engine fails to start after 10 seconds, turn off the key for 5 to 30 seconds. Then repeat steps (5) and (6).)

IMPORTANT :
- Do not allow the starter motor to run continuously for more than 20 seconds.
- Be sure to warm up the engine, not only in winter, but also in warmer seasons. An insufficiently warmed-up engine can shorten its service life.
- When there is fear of temperature dropping below -15°C (5°F) detach the battery from the machine, and keep it indoors in a safe area, to be reinstalled just before the next operation.

STOPPING THE ENGINE

1. **Return the speed control lever to low idle and run the engine under idling conditions.**

IMPORTANT :
- If equipped with a turbo-charger, allow the engine to idle for 5 minutes before shutting it off after a full load operation.
  Failure to do so may lead to turbo-charger trouble.

2. **The engine should stop with the starter switch placed at the "OFF" position. (In case of non-stopping, set the engine stop lever to the "STOP" position manually.)**

3. **After stopping the engine, remove the key. (Be sure to return the engine stop lever to the "START" position to be ready for the next starting in case of manually stopping.)**

[V2607-DI-E3-B, V2607-DI-T-E3-B]

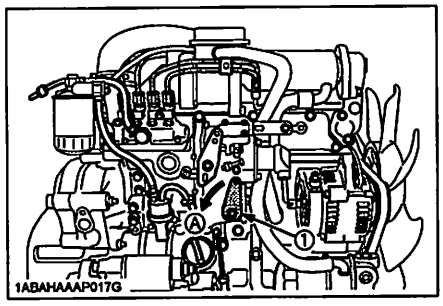

[V3307-DI-T-E3-B]

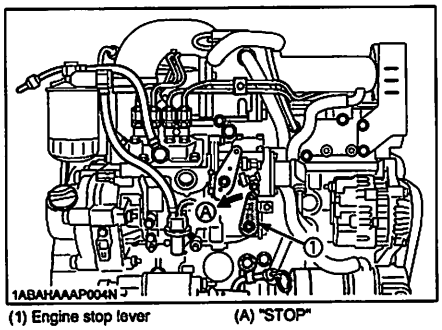

(1) Engine stop lever (A) "STOP"

CHECKS DURING OPERATION

While running, make the following checks to see that all parts are working correctly.

■Radiator Cooling water(Coolant)

⚠ WARNING

To avoid personal injury:
- **Do not remove radiator cap until coolant temperature is well below its boiling point. Then loosen cap slightly to the stop position, to relieve any pressure, before removing cap completely.**

If the coolant temperature warning lamp lights up or if steam or coolant does not stop squirting from the radiator overflow pipe, turn off the load and keep the engine idling (COOLING-DOWN) for at least 5 minutes to let it cool down gradually. Then stop the engine and take the following inspection and servicing.

1. Check to see if the coolant runs short or if there is any coolant leak;
2. Check to see if there is any obstacle around the cooling air inlet or outlet;
3. Check to see if there is any dirt or dust between radiator fins and tube;
4. Check to see if the fan belt is too loose; and
5. Check to see if radiator water pipe is clogged.

■Oil pressure lamp

The lamp lights up to warn the operator that the engine oil pressure has dropped below the prescribed level. If this should happen during operation or should not go off even after the engine is accelerated more than 1000rpm, immediately stop the engine and check the following:

1. Engine oil level (See **"ENGINE OIL"** in **"MAINTENANCE"** Section).

■Charge lamp

The lamp lights up to warn the operator that the battery charge is low. If this should happen during operation, immediately stop the engine and check the following:

1. Cable broken
2. Poor connection at alternator terminal
3. Fan belt too loose or damaged

■Fuel

⚠ WARNING

To avoid personal injury:

- **Fluid escaping from pinholes may be invisible. Do not use hands to search for suspected leaks; Use a piece of cardboard or wood, instead. If injured by escaping fluid, see a medical doctor at once. This fluid can produce gangrene or a severe allergic reaction.**
- **Check any leaks from fuel pipes or fuel injection pipes. Use eye protection when checking for leaks.**

Be careful not to empty the fuel tank. Otherwise air may enter the fuel system, requiring fuel system bleeding. (See **"FUEL"** in Periodic service Section).

■Color of exhaust

While the engine is run within the rated output range:

- The color of exhaust remains colorless.
- If the output slightly exceeds the rated level, exhaust may become a little colored with the output level kept constant.
- If the engine is run continuously with dark exhaust emission, it may lead to trouble with the engine.

■Immediately stop the engine if;

- The engine suddenly slows down or accelerates.
- Unusual noises are suddenly heard.
- Exhaust fumes suddenly become very dark.
- The oil pressure lamp or the water temperature alarm lamp lights up.

REVERSED ENGINE REVOLUTION AND REMEDIES

⚠ CAUTION

To avoid personal injury:

- **Reversed engine operation can make the machine reverse and run it backwards. It may lead to serious trouble.**
- **Reversed engine operation may make exhaust gas gush out into the intake side and ignite the air cleaner; it could catch fire.**

Reversed engine revolution must be stopped immediately since engine oil circulation is cut quickly, leading to serious trouble.

■How to tell when the engine starts running backwards

1. Lubricating oil pressure drops sharply. Oil pressure warning light, if used, will light.
2. Since the intake and exhaust sides are reversed, the sound of the engine changes, and exhaust gas will come out of the air cleaner.
3. A louder knocking sound will be heard when the engine starts running backwards.

■Remedies

1. Immediately set the engine stop lever to the "STOP" position to stop the engine.
2. After stopping the engine, check the air cleaner, intake rubber tube and other parts, and then replace parts as needed.

ENGLISH

MAINTENANCE

⚠ CAUTION

To avoid personal injury:

- **Be sure to conduct daily checks, periodic maintenance, refueling or cleaning on a level surface with the engine shut off and remove the key.**
- **Before allowing other people to use your engine, explain how to operate, and have them read this manual before operation.**
- **When cleaning any parts, do not use gasoline but use regular cleanser.**
- **Always use proper tools, that are in good condition. Make sure you understand how to use them, before performing any service work.**
- **When installing, be sure to tighten all bolts lest they should be loose. Tighten the bolts by the specified torque.**
- **Do not put any tools on the battery, or battery terminals may short out. Severe burns or fire could result. Detach the battery from the engine before maintenance.**
- **Do not touch muffler or exhaust pipes while they are hot; Severe burns could result.**

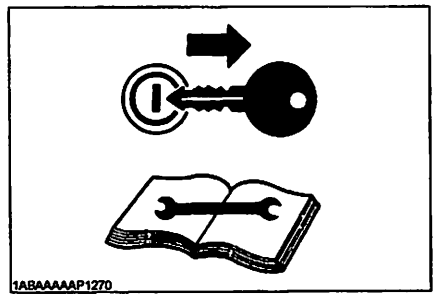

1ABAAAAAP1270

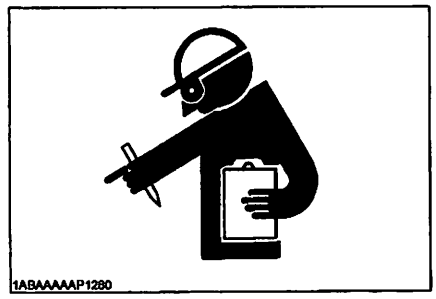

1ABAAAAAP1280

SERVICE INTERVALS

Observe the following for service and maintenance.

No.	Item	Interval						Ref.page		
		100	200	250	300	400	500			
1	Check of fuel pipes and clamp bands							13	◎	@
2	Cleaning of air cleaner element			○			○	20	*1	@
3	Cleaning of fuel filter			○			○	13		
4	Check of fan belt tightness			○			○	21		
5	Check of radiator hoses and clamp bands			○			○	18		
6	Check of intake air line			○			○	-		@
7	Replacing the oil filter cartridge						○	16	◎	
8	Replacement of fuel filter cartridge						○	14		@
9	Removal of sediment in fuel tank						○	-		
10	Cleaning of water jacket (radiator interior)						○	17		
11	Replacement of fan belt						○	21		
12	Check of valve clearance	Every 1000 hours						23		
13	Check of fuel injection nozzle injection pressure	Every 1500 hours						-	*3	@
14	Check of turbo charger	Every 3000 hours						-	*3	@
15	Check of injection pump	Every 3000 hours						-	*3	@
16	Replacement of air cleaner element	Every one years						20	*2	@
17	Change of radiator coolant (L.L.C.)	Every two years						17		
18	Replacement of radiator hoses and clamp bands	Every two years						18		
19	Replacement of fuel pipes and clamp bands	Every two years						13	*3	@
20	Replacement of intake air line	Every two years						-	*4	@
21	Changing engine oil	See NOTE						15	◎	

IMPORTANT :

- The jobs indicated by ◎ must be done after the first 50 hours of operation.

*1 Air cleaner should be cleaned more often in dusty conditions than in normal conditions.
*2 After 6 times of cleaning.
*3 Consult your local KUBOTA Dealer for this service.
*4 Replace only if necessary.

- The items listed above (@ marked) are registered as emission related critical parts by KUBOTA in the U.S. EPA nonroad emission regulation. As the engine owner, you are responsible for the performance of the required maintenance on the engine according to the above instruction.
  Please see the Warranty Statement in detail.

NOTE :

- **Changing interval of engine oil**

Models	Interval
V2607-DI-E3-B, V2607-DI-T-E3-B, V3307-DI-T-E3-B	500 Hrs or 1 year whichever comes first
Initial	50 Hrs

- API service classification: above CF grade
- Ambient temperature: below 35°C (95°F)

NOTE :

Lubricating oil

With the emission control now in effect, the CF-4 and CI-4 lubricating oils have been developed for use of a low-sulfur fuel on on-road vehicle engines.

- **Lubricating oil recommended when a low-sulfur or high-sulfur fuel is employed.**

○ : Recommendable - : Not recommendable

Lubricating oil class	Fuel		Remarks
	Low sulfur	High sulfur	
CF	○	-	*TBN≧10
CI-4	○	-	

* TBN: Total Base Number

- Oil used in the engine should have an American Petroleum Institute (API) service classification and Proper SAE Engine Oil according to the ambient temperatures as shown below:

Above 25°C (77°F)	SAE30, SAE10W-30 or 15W-40
-10°C to 25°C (14°F to 77°F)	SAE10W-30 or 15W-40
Below -10°C (14°F)	SAE10W-30

- Recommended API categorization
  Third Stage Exhaust Emissions Regulations Specification.

Fuel used	Engine oil grade
Ultra Low Sulfur Fuel (< 15 ppm)	CF or CI-4 (Class CF-4, CG-4 and CH-4 engine, oils cannot be used on EGR type engines)

EGR: Exhaust Gas Re-circulation

- The CJ-4 engine oil is intended for DPF (Diesel Particulate Filter) type engines

PERIODIC SERVICE

FUEL

Fuel is flammable and can be dangerous. You should handle fuel with care.

⚠ CAUTION

To avoid personal injury:

- **Do not mix gasoline or alcohol with diesel fuel. This mixture can cause an explosion.**
- **Be careful not to spill fuel during refueling. If fuel should spill, wipe it off at once, or it may cause a fire.**
- **Do not fail to stop the engine before refueling. Keep the engine away from the fire.**
- **Be sure to stop the engine while refueling or bleeding and when cleaning or changing fuel filter or fuel pipes. Do not smoke when working around the battery or when refueling.**
- **Check the above fuel systems at a well ventilated and wide place.**
- **When fuel and lubricant are spilled, refuel after letting the engine cool off.**
- **Always keep spilled fuel and lubricant away from engine.**

■Fuel level check and refueling

1. Check to see that the fuel level is above the lower limit of the fuel level gauge.
2. If the fuel is too low, add fuel to the upper limit. Do not overfill.

- No.2-D is a distillate fuel oil of lower volatility for engines in industrial and heavy mobile service. (SAE J313 JUN87)
- Diesel fuels specified to EN 590 or ASTM D975 are recommended.

Flash Point, °C (°F)	Water and Sediment, volume %	Carbon Residue on, 10 percent Residuum, %	Ash, weight %
Min	Max	Max	Max
52 (125)	0.05	0.35	0.01

Distillation Temperatures, °C(°F) 90% Point		Viscosity Kinematic cSt or mm²/s at 40°C		Viscosity Saybolt, SUS at 37.8°C (100°F)		Sulfur, weight %	Copper Strip Corrosion	Cetane Number
Min	Max	Min	Max	Min	Max	Max	Max	Min
282 (540)	338 (640)	1.9	4.1	32.6	40.1	0.50	No. 3	40

- Cetane number of 45 minimum. Cetane number greater than 50 is preferred, especially for temperatures below -20°C (-4°F) or elevations above 1500 m (5000 ft).
- If diesel fuel with sulfur content greater than 0.5 % sulfur content is used, reduce the service interval for engine oil and filter by 50%.
- DO NOT use diesel fuel with sulfur content greater than 1.0%.
- This engine conforms to Interim Tier 4. The law specifies the use of ultra low sulfur fuel at EPA regulated area (North America). To comply with this law, use No.1-D S15 diesel fuel as an alternative to No.1-D when the temperature is below -10°C (-14°F).

IMPORTANT :

- Be sure to use a strainer when filling the fuel tank, or dirt or sand in the fuel may cause trouble in the fuel injection pump.
- For fuel, always use diesel fuel. You are required not to use alternative fuel, because its quality is unknown or it may be inferior in quality. Kerosene, which is very low in cetane rating, adversely affects the engine. Diesel fuel differs in grades depending on the temperature.
- Be careful not to let the fuel tank become empty, or air can enter the fuel system, necessitating bleeding before next engine start.

■Air bleeding the fuel system

⚠ CAUTION

To avoid personal injury;

- **Do not bleed a hot engine as this could cause fuel to spill onto a hot exhaust manifold creating a danger of fire.**

Air bleeding of the fuel system is required if;
- after the fuel filter and pipes have been detached and refitted;
- after the fuel tank has become empty; or
- before the engine is to be used after a long storage.

[PROCEDURE Ⓐ] (gravity feed fuel tanks only)
1. Fill the fuel tank to the fullest extent. Open the fuel filter lever.
2. Open the joint bolt on top of the fuel injection pump.
3. Turn the engine, continue it for about 10 seconds and then stop it, or move the fuel feed pump lever by hand (optional).
4. Close the joint bolt on top of the fuel injection pump.

IMPORTANT :
- Always keep the air vent cock on the fuel injection pump closed except when air is vented, or it may cause the engine to stop.

[GRAVITY FEED SYSTEM]
[V2607-DI-E3-B, V2607-DI-T-E3-B]

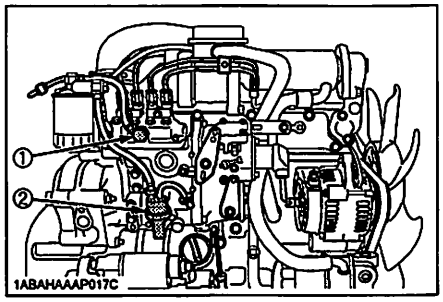

[V3307-DI-T-E3-B]

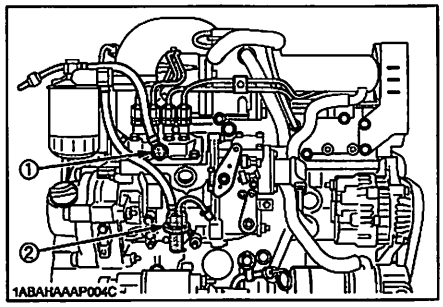

(1) Joint bolt
(2) Fuel feed pump

NOTE :
- For the engine equipped with automatic venting (optional) no manual bleeding of fuel lines is required.

[PROCEDURE Ⓑ] (fuel tanks lower than injection pump)
1. For fuel tanks that are lower than the injection pump. The fuel system must be pressurized by the fuel system electric fuel pump.
2. If an electric fuel pump is not used, you must manually actuate the pump by lever to bleed.
3. The primary fuel filter must be on the pressure side of the pump if the fuel tank is lower than the injection pump.
4. To bleed, follow (2) through (4) above.

IMPORTANT :
- Tighten air vent plug of the fuel injection pump except when bleeding, or it may stop the engine suddenly.

[TANK BELOW INJECTION PUMP SYSTEM]

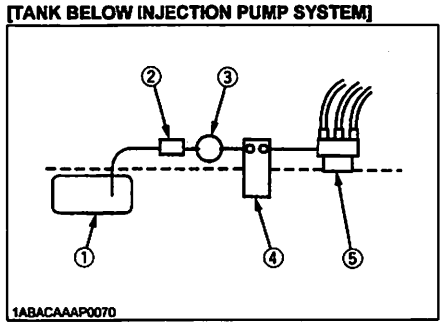

(1) Fuel tank below injection pump
(2) Pre-filter
(3) Electric or Mechanical pump
(4) Main Filter
(5) Injection pump

■Checking the fuel pipes

⚠ CAUTION

To avoid personal injury;

- **Check or replace the fuel pipes after stopping the engine. Broken fuel pipes can cause fires.**

Check the fuel pipes every 50 hours of operation. When if;

1. If the clamp band is loose, apply oil to the screw of the band, and tighten the band securely.
2. If the fuel pipes, made of rubber, become worn out, replace them and clamp bands every 2 years.
3. If the fuel pipes and clamp bands are found worn or damaged before 2 years' pass, replace or repair them at once.
4. After replacement of the pipes and bands, air-bleed the fuel system.

IMPORTANT :

- When the fuel pipes are not installed, plug them at both ends with clean cloth or paper to prevent dirt from entering. Dirt in the pipes can cause fuel injection pump malfunction.

[V2607-DI-E3-B, V2607-DI-T-E3-B]

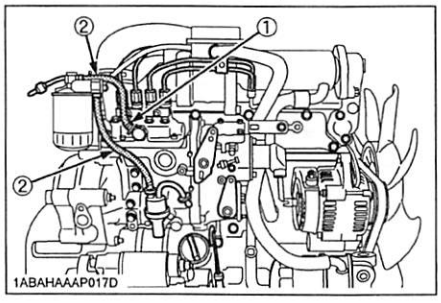

[V3307-DI-T-E3-B]

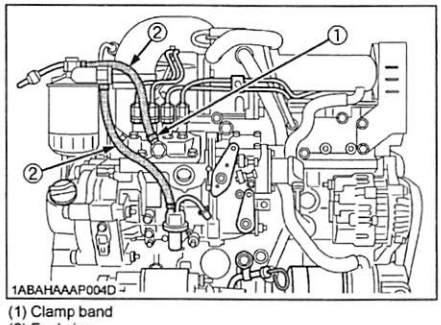

(1) Clamp band
(2) Fuel pipe

■Cleaning the fuel filter pot

Every 250 hours of operation, clean the fuel filter in a clean place to prevent dust intrusion.

1. Close the fuel filter lever.

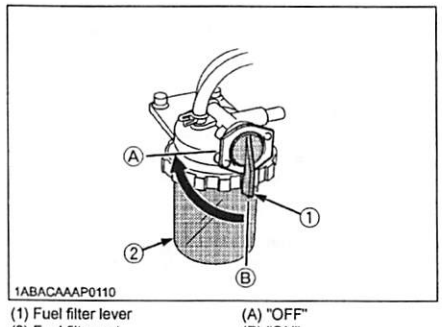

(1) Fuel filter lever
(2) Fuel filter pot
(A) "OFF"
(B) "ON"

2. Remove the top cap, and rinse the inside with diesel fuel.
3. Take out the element, and rinse it with diesel fuel.
4. After cleaning, reinstall the fuel filter, keeping out of dust and dirt.
5. Air-bleed the injection pump.

IMPORTANT :

- Entrance of dust and dirt can cause a malfunction of the fuel injection pump and the injection nozzle. Wash the fuel filter cup periodically.

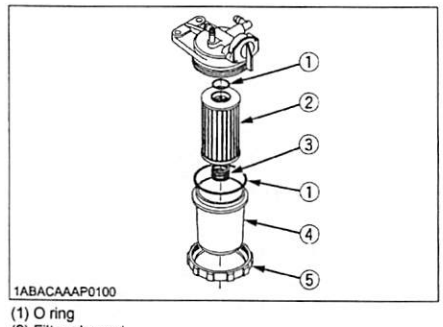

(1) O ring
(2) Filter element
(3) Spring
(4) Filter bowl
(5) Screw ring

■Fuel filter cartridge replacement

1. Replace the fuel filter cartridge with a new one every 500 operating hours.
2. Apply fuel oil thinly over the gasket and tighten the cartridge into position by hand-tightening only.
3. Finally, vent the air.

IMPORTANT :

- Replace the fuel filter cartridge periodically to prevent wear of the fuel injection pump plunger or the injection nozzle, due to dirt in the fuel.

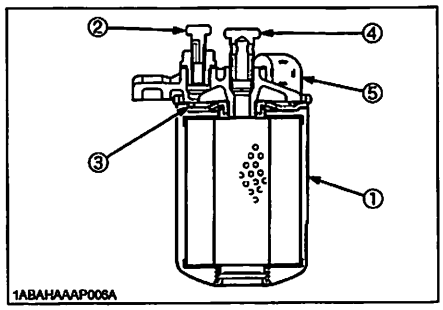

(1) Fuel filter cartridge
(2) Air vent plug
(3) O ring
(4) Pipe joint
(5) Cover

NOTE :

- The fuel filter cartridge and water separator should be replaced more earlier according to the fuel classification in use.

ENGINE OIL

⚠ CAUTION

To avoid personal injury:

- **Be sure to stop the engine before checking and changing the engine oil and the oil filter cartridge.**
- **Do not touch muffler or exhaust pipes while they are hot; Severe burns could result. Always stop the engine and allow it to cool before conducting inspections, maintenance, or for a cleaning procedure.**
- **Contact with engine oil can damage your skin. Put on gloves when using engine oil. If you come in contact with engine oil, wash it off immediately.**

IMPORTANT :

- Do not operate a diesel engine when engine oil is overfilled. This oil can drain through the air intake system, which cause engine disacceleration and oil leaks from breather pipings. It could result in a over-running or oil hammering of engine in case of the engine with suction blow-by gases breathed in.

■Checking oil level and adding engine oil

1. Check the engine oil level before starting or more than 5 minutes after stopping the engine.
2. Remove the oil level gauge, wipe it clean and reinstall it.
3. Take the oil level gauge out again, and check the oil level.

[V2607-DI-E3-B, V2607-DI-T-E3-B]

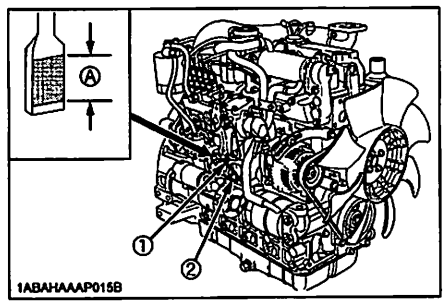

[V3307-DI-T-E3-B]

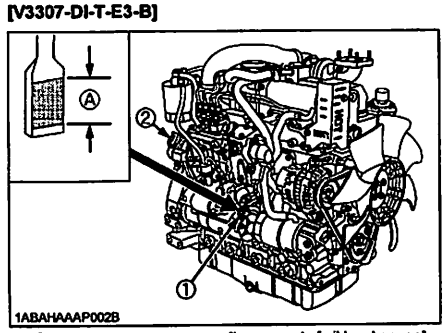

(1) Oil level gauge
(2) Oil filler plug

[Lower end of oil level gauge]
(A) Engine oil level within this range is proper.

4. If the oil level is too low, remove the oil filler plug, and add new oil to the prescribed level.
5. After adding oil, wait more than 5 minutes and check the oil level again. It takes some time for the oil to drain down to the oil pan.

Models	Engine oil quantity
V2607-DI-E3-B, V2607-DI-T-E3-B	10.2 L (2.69 U.S.gals.)
V3307-DI-T-E3-B	11.2 L (2.95 U.S.gals.)

*API service classification: above CF grade

IMPORTANT :

- Engine oil should be MIL-L-2104C or have properties of API classification CF grades or higher. Change the type of engine oil according to the ambient temperature.

above 25°C (77°F)	SAE30 or SAE10W-30 SAE15W-40
-10°C to 25°C (14°F to 77°F)	SAE10W-30 or SAE15W-40
below -10°C (14°F)	SAE10W-30

- When using oil of different brands from the previous one, be sure to drain all the previous oil before adding the new engine oil.

NOTE :

- Be sure to inspect the engine, locating it on a level place. If placed on gradients accurately,oil quantity may not be measured.

■Changing engine oil

⚠ CAUTION

To avoid personal injury:

- **Be sure to stop the engine before draining engine oil.**
- **When draining engine oil, place some container underneath the engine and dispose it according to local regulations.**
- **Do not drain oil after running the engine. Allow engine to cool down sufficiently.**

1. Change oil after the initial 50 hours of operation and every 500 hours thereafter.
   When the annual operating hours are below 500, replace the oil every year.
2. Remove the drain plug at the bottom of the engine, and drain all the old oil. Drain oil will drain easier when the oil is warm.
3. When letting out the oil, remove the filler plug too. With the filler plug still in place, it would be difficult to discharge the oil completely .

[V2607-DI-E3-B, V2607-DI-T-E3-B]

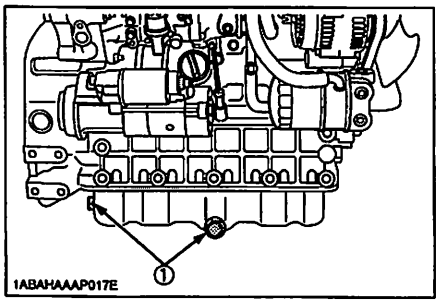

[V3307-DI-T-E3-B]

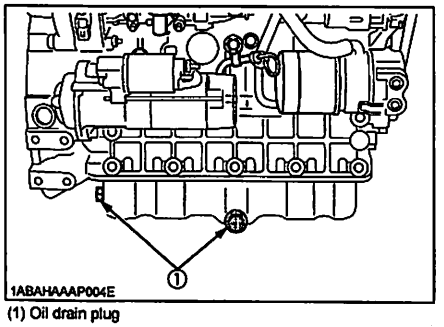

(1) Oil drain plug

4. Add new engine oil up to the upper limit of the oil level gauge. Be careful not to add oil above the upper limit of the oil level gauge.

■**Replacing the oil filter cartridge**

⚠ CAUTION

To avoid personal injury:

- **Be sure to stop the engine before changing the oil filter cartridge.**
- **Allow engine to cool down sufficiently, oil can be hot and cause burns.**

1. Replace the oil filter cartridge. Oil filter cartridge should be replaced, after the initial 50 hours of operation and every 500 hours thereafter.
2. Remove the old oil filter cartridge.
3. Apply a film of oil to the gasket for the new cartridge.
4. Screw in the cartridge by hand. When the gasket contacts the seal surface, tighten the cartridge enough by hand. Because, if you tighten the cartridge with a wrench, it will be tightened too much.

[V2607-DI-E3-B, V2607-DI-T-E3-B]

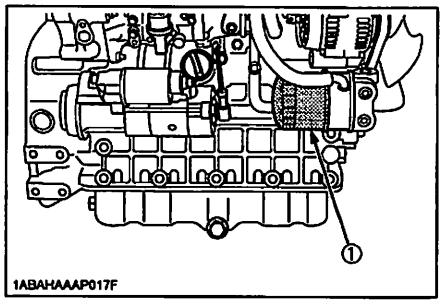

[V3307-DI-T-E3-B]

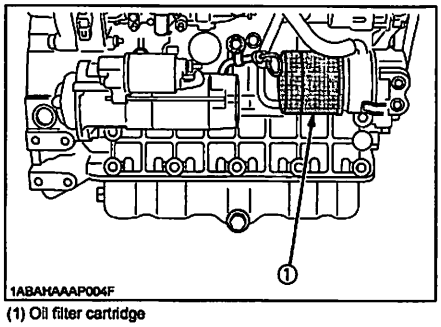

(1) Oil filter cartridge

5. After the new cartridge has been replaced, the engine oil level normally decreases a little. Thus, run the engine for a while and check for oil leaks through the seal before checking the engine oil level. Add oil if necessary.

NOTE :

- Wipe off any oil sticking to the machine completely.

RADIATOR

Coolant will last for one day's work if filled all the way up before operation start. Make it a rule to check the coolant level before every operation.

⚠ WARNING

To avoid personal injury:

- **Do not stop the engine suddenly, stop it after about 5 minutes of unloaded idling.**
- **Work only after letting the engine and radiator cool off completely (more than 30 minutes after it has been stopped).**
- **Do not remove the radiator cap while coolant is hot. When cool to the touch, rotate cap to the first stop to allow excess pressure to escape. Then remove cap completely.**
  If overheats should occur, steam may gush out from the radiator or recovery tank; Severe burns could result.

■Checking coolant level, adding coolant

1. Remove the radiator cap, after the engine has completely cooled, and check to see that coolant reaches the supply port.

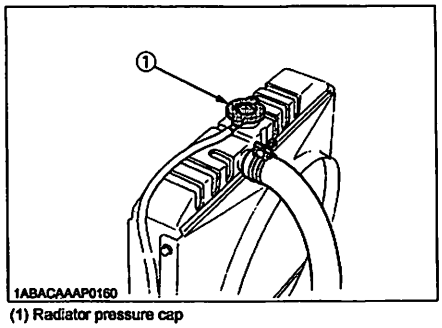

(1) Radiator pressure cap

2. If the radiator is provided with a recovery tank, check the coolant level of the recovery tank. When it is between the "FULL" and "LOW" marks, the coolant will last for one day's work.

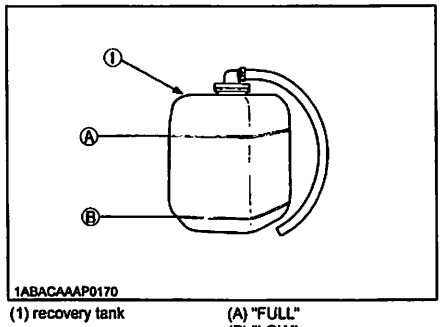

(1) recovery tank (A) "FULL" (B) "LOW"

3. When the coolant level drops due to evaporation, add water only up to the full level.
4. Check to see the drain cock; which is at the lower part of the radiator as figures below.

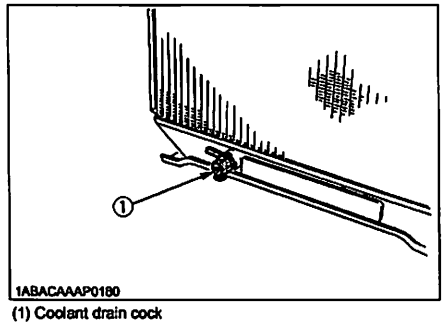

(1) Coolant drain cock

IMPORTANT :

- If the radiator cap has to be removed, follow the caution and securely retighten the cap.
- If coolant should be leak, consult your local KUBOTA dealer.
- Make sure that muddy or sea water does not enter the radiator.
- Use clean, fresh water and 50% anti-freeze to fill the recovery tank.
- Do not refill recovery tank with coolant over the "FULL" level mark.
- Be sure to close the radiator cap securely. If the cap is loose or improperly closed, coolant may leak out and decrease quickly.

■Changing coolant

1. To drain coolant, always open both drain cocks and simultaneously open the radiator cap as well. With the radiator cap kept closed, a complete drain of water is impossible.
2. Remove the overflow pipe of the radiator pressure cap to drain the recovery tank.
3. Prescribed coolant volume (U.S.gallons)

Models	Quantity
V2607-DI-E3-B, V2607-DI-T-E3-B	6.0 L (1.59 U.S.gals.)
V3307-DI-T-E3-B	6.3 L (1.67 U.S.gals.)

NOTE :

- Coolant quantities shown are for standard radiators.

4. An improperly tightened radiator cap or a gap between the cap and the seat quickens loss of coolant.
5. Check and clean the plug threads and surface and the packing of the water drain plug to prevent dirt and debris from the entering the engine.
6. Coolant (Radiator cleaner and anti-freeze)

Season	Coolant
All seasons	Pure water and anti-freeze (See "Anti-freeze" in RADIATOR section)

7. After flushing, fill with clean water and anti-freeze until the coolant level is just below the radiator cap. Install the radiator cap securely.
8. Fill with coolant up to the "FULL" mark of recovery tank.
9. Start and operate the engine for few minutes.
10. Stop the engine, remove the key and let cool.
11. Check coolant level of recovery tank and add coolant if necessary.

■Remedies for quick decrease of coolant

1. Check any dust and dirt between the radiator fins and tube. If any, remove them from the fins and the tube.
2. Check the tightness of the fan belt. If loose, tighten it securely.
3. Check the internal blockage in the radiator hose. If scale forms in the hose, clean with the scale inhibitor or its equivalent.

■Checking radiator hoses and clamp bands

⚠ CAUTION

To avoid personal injury:

- **Be sure to check radiator hoses and clamp bands periodically. If radiator hose is damaged or coolant leaks, overheats or severe burns could occur.**

Check to see if radiator hoses are properly fixed every 250 hours of operation or 6 months, whichever comes first.

1. If clamp bands are loose or water leaks, tighten hose clamp securely.
2. Replace hoses and tighten clamp bands securely, if radiator hoses are swollen, hardened or cracked.

Replace hoses and clamp bands every 2 years or earlier, if checked and found that hoses are swollen, hardened or cracked.

■Precaution at overheating

The event that the coolant temperature is nearly or more than the boiling point is called **"OVERHEATING"**.
While running, make the following checks to see that all parts are working correctly. **If anything is unusual, inspect it, referring to the relevant description in "MAINTENANCE" and "PERIODIC SERVICE" section.**

◆ Coolant

If the coolant temperature warning lamp lights up or if steam or coolant does not stop squirting from the radiator overflow pipe, turn off the load and **keep the engine idling (COOLING-DOWN) for at least 5 minutes** to let it cool down gradually. Then stop the engine and take the following inspection and servicing.

1. Check to see if the coolant runs short or if there is any coolant leak;
2. Check to see if there is any obstacle around the cooling air inlet or outlet;
3. Check to see if there is any dirt or dust between radiator fins and tube;
4. Check to see if the fan belt is too loose; and
5. Check to see if radiator water pipe is clogged.

■Cleaning radiator core(outside)

If dust is between the fin and tube, wash it away with running water.

IMPORTANT :

- Do not clean radiator with firm tools such as spatulas or screwdrivers. They may damage specified fin or tube. It can cause coolant leaks or decrease cooling performance.

■**Anti-freeze**

⚠ CAUTION

To avoid personal injury:

- When using anti-freeze, put on some protection such as rubber gloves (Anti-freeze contains poison.).
- If should drink anti-freeze, throw up at once and take medical attention.
- When anti-freeze comes in contact with the skin or clothing, wash it off immediately.
- Do not mix different types of anti-freeze. The mixture can produce chemical reaction causing harmful substances.
- Anti-freeze is extremely flammable and explosive under certain conditions. Keep fire and children away from anti-freeze.
- When draining fluids from the engine, place some container underneath the engine body.
- Do not pour waste onto the grounds, down a drain, or into any water source.
- Also, observe the relevant environmental protection regulations when disposing of anti-freeze.

Always use a 50/50 mix of long-life coolant and clean soft water in KUBOTA engines.
Contact KUBOTA concerning coolant for extreme conditions.

1. Long-life coolant (hereafter LLC) comes in several types. Use ethylene glycol (EG) type for this engine.
2. Before employing LLC-mixed cooling water, flush the radiator with fresh water. Repeat this procedure 2 or 3 times to clean up the radiator and engine block from inside.
3. Mixing the LLC
   Premix 50% LLC with 50% clean soft water. When mixing, stir it up well, and then fill into the radiator.
4. The procedure for the mixing of water and anti-freeze differs according to the make of the anti-freeze. Refer to SAE J1034 standard, more specifically also to SAE J814c.

Vol % Anti-freeze	Freezing Point		Boiling Point *	
	°C	°F	°C	°F
50	-37	-34	108	226

*At 1.013 × 10^5Pa (760 mmHg) pressure (atmospheric). A higher boiling point is obtained by using a radiator pressure cap which permits the development of pressure within the cooling system.

5. Adding the LLC
   (1) Add only water if the coolant level reduces in the cooling system by evaporation.
   (2) If there is a coolant leak, add the LLC of the same manufacturer and type in the same coolant percentage.
   *Never add any long-life coolant of different manufacturer. (Different brands may have different additive components, and the engine may fail to perform as specified.)
6. When the LLC is mixed, do not employ any radiator cleaning agent. The LLC contains anti-corrosive agent. If mixed with the cleaning agent, sludge may build up, adversely affecting the engine parts.
7. Kubota's genuine long-life coolant has a service life of 2 years. Be sure to change the coolant every 2 years.

NOTE :

- The above data represent industry standards that necessitate a minimum glycol content in the concentrated anti-freeze.

ENGLISH

AIR CLEANER

Since the air cleaner employed on this engine is a dry type, never apply oil to it.

1. Open the evacuator valve once a week under ordinary conditions - or daily when used in a dusty place. This will get rid of large particles of dust and dirt.
2. Wipe the inside air cleaner clean with cloth if it is dirty or wet.
3. Avoid touching the primary element except when cleaning.
4. When dry dust adheres to the element, blow compressed air from the inside turning the element. Pressure of compressed air must be under 205kPa ($2.1 kgf/cm^2$, 30psi).
5. Replace the primary element every year or every 6 cleanings. If the primary element is stained heavily, replace it soon. At this time, replace the secondary element too.
6. The secondary element should be removed only if it is to be replaced.
7. To protect the engine, do not remove the secondary element in servicing the primary element.

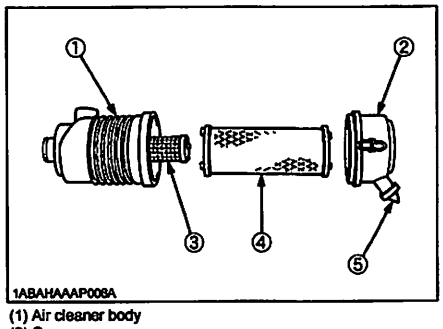

(1) Air cleaner body
(2) Cover
(3) Secondary element
(4) Primary element
(5) Evacuator valve

IMPORTANT :

- Make sure hooking clip for cover for the element is tight enough. If it is loose, dust and dirt may be sucked in, wearing down the cylinder liner and piston ring earlier, and thereby resulting in poor power output.
- Do not overservice the air cleaner element. Overservicing may cause dirt to enter the engine causing premature wear. Use the dust indicator as a guide on when to service.

■Cleaning Primary Air Filter Element

To clean the element, use clean dry compressed air on the inside of the element.Air pressure at the nozzle must not exceed 205 kPa (2.1 kgf/cm; 30 psi).
Maintain reasonable distance between the nozzle and the filter.

■Evacuator valve

Open the evacuator valve once a week under ordinary conditions - or daily when used in a dusty place - to get rid of large particles of dust and dirt.

■For the air cleaner with a dust cup (optional)

Remove and clean out the dust cup before it becomes half full with dust; usually once a week, or even every day if the working surroundings are dusty.
Install the air cleaner dust cup with "TOP" indicated on the rear of the cup in the upside. (However, it may be installed in either direction when the cover is placed at the lower part.)

IMPORTANT :

- If the dust cup is mounted incorrectly, dust or dirt does not collect in the cup, and direct attachments of the dust to the element will cause its lifetime to shorten to a great extent.

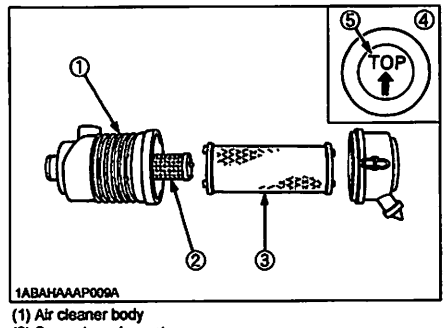

(1) Air cleaner body
(2) Secondary element
(3) Primary element
(4) Dust cup
(5) "TOP" mark

■Dust indicator (optional)

If the red signal on the dust indicator attached to the air cleaner is visible, the air cleaner has reached the service level.
Clean the element immediately, and reset the signal with the "RESET" button.

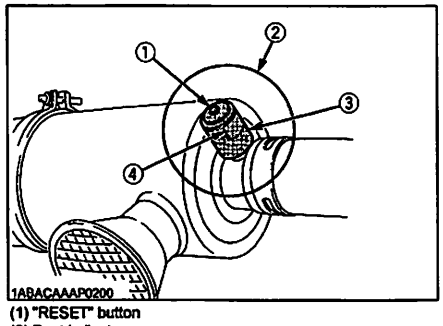

(1) "RESET" button
(2) Dust indicator
(3) Service level
(4) Signal

ELECTRIC WIRING

⚠ CAUTION

To avoid personal injury:

- **◆ Shorting of electric cable or wiring may cause a fire.**
  - **● Check to see if electric cables and wiring are swollen, hardened or cracked.**
  - **● Keep dust and water away from all power connections. Loose wiring terminal parts, make bad connections. Be sure to repair them before starting the engine.**

Damaged wiring reduces the capacity of electrical parts. Change or repair damaged wiring immediately.

FAN BELT

■Adjusting Fan Belt Tension

⚠ CAUTION

To avoid personal injury:

- **● Be sure to stop the engine and remove the key before checking the belt tension.**
- **● Be sure to reinstall the detached safety shield after maintenance or checking.**

Proper fan belt tension	A deflection of between 10 to 12 mm (0.39 to 0.47 in.) when the belt is pressed in the middle of the span.

1. Stop the engine and remove the key.
2. Apply moderate thumb pressure to belt between pulleys.
3. If tension is incorrect, loosen the alternator mounting bolts and, using a lever placed between the alternator and the engine block, pull the alternator out until the deflection of the belt falls within acceptable limits.
4. Replace fan belt if it is damaged.

IMPORTANT :

- If belt is loosen or damaged and the fan is damaged, it could result in overheats or insufficient charging. Correct or replace belt.

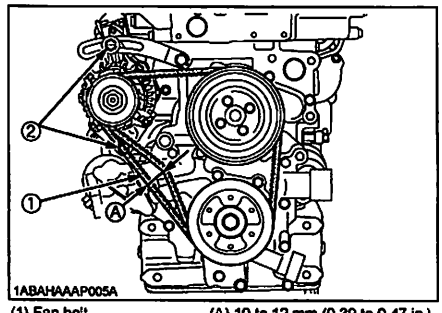

(1) Fan belt
(2) Bolt and nut
(A) 10 to 12 mm (0.39 to 0.47 in.) (under load of 10kgf (22 lbs))

CARRIAGE AND STORAGE

CARRIAGE

⚠ CAUTION

To avoid personal injury:

- **Fix the engine securely not to fall during operation.**
- **Do not stand near or under the engine while carrying it.**
- **The engine is heavy. In handling it, be very alert not to get your hands and body caught in.**

1. Use carrier such as crane when carrying the engine, or hurt your waist and yourself. Support the engine securely with rope not to fall while carrying it.
2. When lifting the engine, put the hook securely to metal fittings attached to the engine. Use strong hook and fittings enough to hang the engine.

STORAGE

⚠ CAUTION

To avoid personal injury:

- **Do not clean the machine with engine running.**
- **To avoid the danger of exhaust fume poisoning, do not operate the engine in a closed building without proper ventilation.**
- **When storing the engine just after running, let the engine cool off.**

Before storing the engine for more than a few months, remove any dirt on the machine, and:

1. Drain the coolant in the radiator. Open the cock at the bottom of the radiator, and remove the pressure cap to drain water completely. Leave the cock open. Hang a note written "No water" on the pressure cap. Since water may freeze when the temperature drops below 0°C (32°F), it is very important that no water is left in the machine.
2. Remove dirty engine oil, fill with new oil and run the engine for about 5 minutes to let the oil penetrate to all the parts.
3. Check all the bolts and nuts, and tighten if necessary.
4. Remove the battery from the engine, adjust the electrolyte level, and recharge it. Store the battery in a dry and dark place.
5. When the engine is not used for a long period of time, run it for about 5 minutes under no load every 2-3 months to keep it free from rust. If the engine is stored without any running, moisture in the air may condense into dew over the sliding parts of the engine, resulting in rust there.
6. If you forget to run the engine for longer than 5-6 months, apply enough engine oil to the valve guide and valve stem seal and make sure the valve works smoothly before starting the engine.
7. Store the engine in a flat place and remove the key from engine.
8. Do not store the engine in a place where has flammable materials such as dry grass or straw.
9. When covering the engine for storage, let engine and muffler cool off completely.
10. Operate the engine after checking and repairing damaged wirings or pipes, and clearing flammable materials carried by mouse.

TROUBLESHOOTING

If the engine does not function properly, use the following chart to identify and correct the cause.

■When it is difficult to start the engine

Cause	Countermeasures
Fuel is thick and doesn't flow.	• Check the fuel tank and fuel filter. • Remove water, dirt and other impurities. • As all fuel will be filtered by the filter, if there should be water or other foreign matters on the filter, clean the filter with kerosene.
Air or water mixed in fuel system	• If air is in the fuel filter or injection lines, the fuel pump will not work properly. • To attain proper fuel injection pressure, check carefully for loosened fuel line coupling, loose cap nut, etc. • Loosen joint bolt stop fuel filter and air vent screws of fuel injection pump to eliminate all the air in the fuel system.
Engine oil becomes thick in cold weather and engine cranks slow.	• Change grade of oil according to the weather (temperature.)
Battery is discharged and the engine will not crank.	• Charge battery. • In winter, always remove battery from machine, charge fully and keep indoors. Install in machine at time of use.

■When output is insufficient

Cause	Countermeasures
Fuel is insufficient.	• Check fuel system.
Overheating of moving parts	• Check lubricating oil system. • Check to see if lubricating oil filter is working properly. • Filter element deposited with impurities would cause poor lubrication. Change element.
Air cleaner is dirty	• Clean the element every 100 hours of operation.
Injection pump wear	• Do not use poor quality fuel as it will cause wear of the pump. Only use No. 2-D diesel fuel.(See **"FUEL"** in **"PERIODIC SERVICE"** Section)

NOTE :

- If the cause of trouble can not be found, contact your KUBOTA dealer.

ENGLISH

■When engine suddenly stops

Cause	Countermeasures
Lack of fuel	• Check the fuel tank and refill the fuel, if necessary. • Also check the fuel system for air or leaks.
Bad nozzle	• If necessary, replace with a new nozzle.
Moving parts are overheated due to shortage of lubrication oil or improper lubrication.	• Check amount of engine oil with oil level gauge. • Check lubricating oil system. • At every 2 times of oil change, oil filter cartridge should be replaced.

■When color of exhaust is especially bad

Cause	Countermeasures
Fuel is of extremely poor quality.	• Select good quality fuel. Use No. 2-D diesel fuel only.
Nozzle is bad.	• If necessary, replace with new nozzle.

■When engine must be stopped immediately

Cause	Countermeasures
Color of exhaust suddenly turns dark.	• Check the fuel injection system, especially the fuel injection nozzle.
Bearing parts are overheated.	• Check the lubricating system.
Oil lamp lights up during operation.	• Check the lubricating system. • Check the function of the relieve valve in the lubricating system. • Check pressure switch. • Check filter base gasket.

■When engine overheats

Cause	Countermeasures
Engine oil insufficient	• Check oil level. Replenish oil as required.
Fan belt broken or elongated	• Change belt or adjust belt tension.
Coolant insufficient	• Replenish coolant.
Excessive concentration of antifreeze	• Add water only or change to coolant with the specified mixing ratio.
Radiator net or radiator fin clogged with dust	• Clean net or fin carefully.
Inside of radiator or coolant flow route corroded	• Clean or replace radiator and parts.
Fan or radiator or radiator cap defective	• Replace defective parts.
Thermostat defective	• Check thermostat and replace if necessary.
Temperature gauge or sensor defective	• Check temperature with thermometer and replace if necessary.
Overload running	• Reduce load.
Head gasket defective or water leakage	• Replace parts.
Unsuitable fuel used	• Use the specified fuel.

SPECIFICATIONS

Model	V2607-DI-E3-B	V2607-DI-T-E3-B	V3307-DI-T-E3-B
Type	Vertical, water-cooled, 4-cycle diesel engine		
Number of cylinders	4		
Bore and stroke mm (in.)	87 x 110 (3.43 x 4.33)		94 x 120 (3.70 x 4.72)
Total displacement cm^3 (cu.in.)	2,615 (160.04)		3,331 (203.27)
Combustion type	Direct Injection Type (E-CDIS)		
SAE NET Intermittent kW / rpm H.P. (SAEJ1349) (HP / rpm)	35.0 / 2700 (46.9 / 2700)	47.5 / 2700 (63.7 / 2700)	53.7 / 2600 (73.0 / 2600)
SAE NET Continuous kW / rpm H.P. (SAEJ1349) (HP / rpm)	30.4 / 2700 (40.8 / 2700)	41.3 / 2700 (55.4 / 2700)	45.6 / 2600 (62.1 / 2600)
Maximum bare speed rpm	2900		2800
Maximum bare idling speed rpm	825 to 875		775 to 825
Order of firing	1-3-4-2		
Direction of rotation	Counter-clockwise (viewed from flywheel side)		
Injection pump	Bosch Type mini pump		
Injection pressure	1st opening pressure 18.63 Mpa (190 kgf/cm²) 2nd opening pressure 21.57 Mpa (220 kgf/cm²)		1st opening pressure 18.63 Mpa (190 kgf/cm²) 2nd opening pressure 22.56 Mpa (230 kgf/cm²)
Injection timing (T.D.C.)	-0.057 rad (-3.25°)	-0.022 rad (-1.25°)	0.023 rad (1.3°)
Compression ratio	20.0	19.0	20.0
Fuel	Diesel Fuel No.2-D		
Lubricant (API classification)	above CF grade		
Dimension mm (in.) (length x width x height)	650 x 475 x 680 (25.6 x 18.7 x 26.8)		674 x 506 x 739 (26.5 x 19.9 x 29.1)
Dry weight (BB Spec.) kg (lbs.)	225 (496)	235 (518)	268 (591)
Starting system	Cell starter (with glow plug)		
Starting motor	12 V 2.5 kW		12 V 3.0 kW
Charging generator	12 V 720 W		12 V 720 W
Recommended battery capacity	12 V 92 Ah		12 V 108 Ah

NOTE :

- Specifications are subject to change without notice.

ENGLISH

WIRING DIAGRAMS

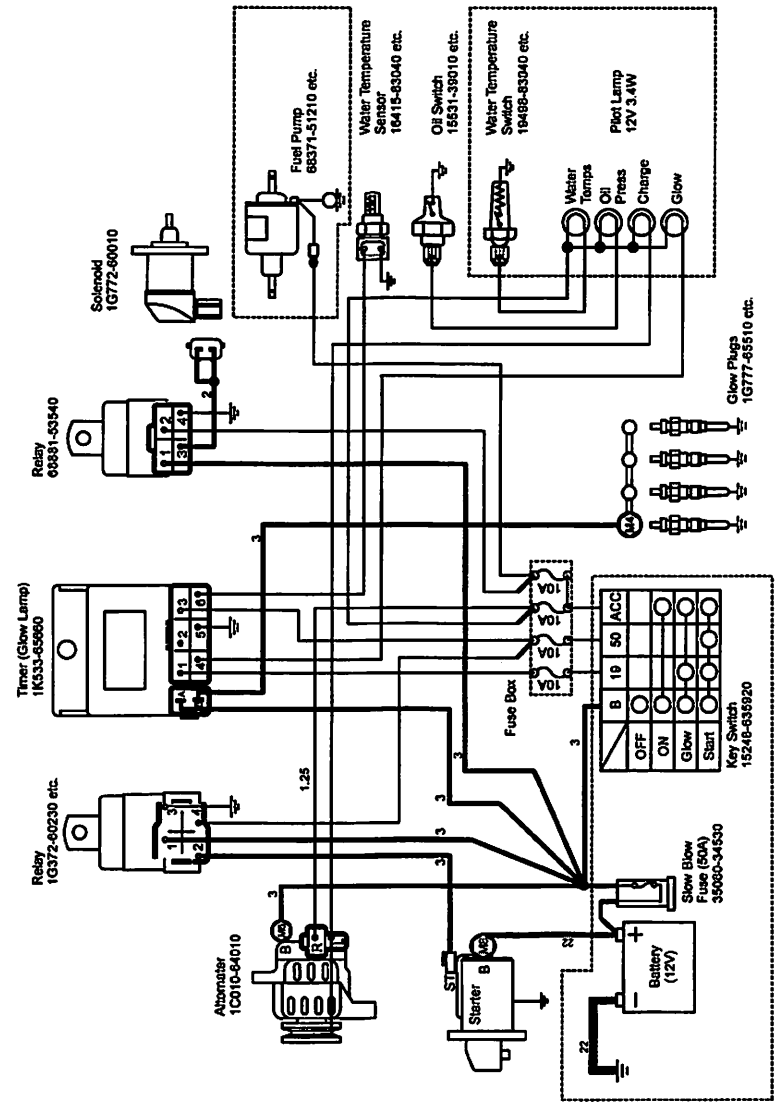

1ABAHAAAP007G

PE10600VD3-04

PARTS LIST

RUBBER CRAWLER CARRIER

MST-600VD

Serial No. 60501 and up

MOROOKA

MOROOKA CO., LTD.

PARTS LIST

RUBBER CRAWLER CARRIER

MST-600VD

Serial No. 60501 and up

FOREWORD

Thank you for purchasing this Morooka Rubber Crawler Carrier.
When ordering a part, please specify the model serial number, the engine serial number and the reading of the hourmeter.

READING FOR PARTS LIST

For complete understanding, the parts list is written as follows.

Fig. Number	Figure numbers are not continuous.
Description	"•" is put in front of the name of an assembly component and the item is entered next to the assembly. If part marked with "•" is an assembly, its component is part marked with "••".
Quantity	The number of pieces per set used for assembly is specified. For assembly or part group components, the number of pieces per assembly is specified.
Serial number	The engine or machine serial number in which the part is used.
Codes	The codes and part number specified in the "Part No." and "Part name" columns represent the following: □ The part specified in the line above is applicable instead of this part. ☆ Supplied as a set rather than singly.

CONTENTS

Item	FIG. No.	PAGE
FORWARD	—	A - 2
CONTENTS	—	0 - 1
ENGINE RELATED PARTS (ENGINE MOUNTING PARTS AND RADIATOR) (SERIAL NO. 60501-60650)	101	1 - 2
ENGINE RELATED PARTS (ENGINE MOUNTING PARTS AND RADIATOR) (SERIAL NO. 60651-)	101A	1 - 6
ENGINE RELATED PARTS (MAIN PUMP AND MOUNTING PARTS) (SERIAL NO. 60501-60576)	105	1 -10
ENGINE RELATED PARTS (MAIN PUMP AND MOUNTING PARTS) (SERIAL NO. 60577-60650)	105A	1 -12
ENGINE RELATED PARTS (MAIN PUMP AND MOUNTING PARTS) (SERIAL NO. 60651-)	105B	1 -14
ENGINE RELATED PARTS (AIR INTAKE SYSTEM) (SERIAL NO. 60501-60650)	111	1 -16
ENGINE RELATED PARTS (AIR INTAKE SYSTEM) (SERIAL NO. 60651-)	111A	1 -18
ENGINE RELATED PARTS (EXHAUST SYSTEM) (SERIAL NO. 60501-60583, 60585)	115	1 -20
ENGINE RELATED PARTS (EXHAUST SYSTEM) (SERIAL NO. 60584, 60586-)	115A	1 -24
FUEL TANK AND FUEL PIPING (SERIAL NO. 60501-60650)	121	1 -28
FUEL TANK AND FUEL PIPING (SERIAL NO. 60651-)	121A	1 -32
FRAME RELATED PARTS (1/5) (ENGINE BONNET AND FRONT BUMPER) (SERIAL NO. 60501-60650)	201	1 -36
FRAME RELATED PARTS (1/5) (ENGINE BONNET AND FRONT BUMPER) (SERIAL NO. 60651-)	201A	1 -38
FRAME RELATED PARTS (2/5) (UNDER COVER AND SAFETY BAR) (SERIAL NO. 60501-60650)	202	1 -40
FRAME RELATED PARTS (2/5) (UNDER COVER AND SAFETY BAR) (SERIAL NO. 60651-)	202A	1 -42
FRAME RELATED PARTS (3/5) (ENGINE CONPARTMENT COVER) (SERIAL NO. 60501-60650)	203	1 -44
FRAME RELATED PARTS (3/5) (ENGINE CONPARTMENT COVER) (SERIAL NO. 60651-)	203A	1 -46
FRAME RELATED PARTS (4/5) (MONITOR PANEL SUPPORT)	204	1 -48
FRAME RELATED PARTS (5/5) (OPERATOR'S SEAT AND FOOT REST)	205	1 -50
CANOPY RELATED PARTS	211	1 -52
UNDER CARRIAGE RELATED PARTS (TRAVEL MOTOR AND IDLER)	301	1 -54
UNDER CARRIAGE RELATED PARTS (CARRIER ROLLER)	311	1 -56
UNDER CARRIAGE RELATED PARTS (TRACK ROLLER)	321	1 -58
STEERING CONTROL SYSTEM (1/2) (SERIAL NO. 60501-60650)	401	1 -60
STEERING CONTROL SYSTEM (1/2) (SERIAL NO. 60651-)	401A	1 -62
STEERING CONTROL SYSTEM (2/2) (SERIAL NO. 60501-60576)	402	1 -64
STEERING CONTROL SYSTEM (2/2) (SERIAL NO. 60577-60650)	402A	1 -66
STEERING CONTROL SYSTEM (2/2) (SERIAL NO. 60651-)	402B	1 -68
ENGINE CONTROL SYSTEM	411	1 -70

Item	FIG. No.	PAGE
DUMP CONTROL SYSTEM (SERIAL NO. 60501-60650)	421	1 -72
DUMP CONTROL SYSTEM (SERIAL NO. 60651-)	421A	1 -74
HYDRAULIC PIPING (CONTROL VALVE AND DUMP CYLINDER LINE) (SERIAL NO. 60501-60576)	501	1 -76
HYDRAULIC PIPING (CONTROL VALVE AND DUMP CYLINDER LINE) (SERIAL NO. 60577-60650)	501A	1 -78
HYDRAULIC PIPING (CONTROL VALVE AND DUMP CYLINDER LINE) (SERIAL NO. 60651-)	501B	1 -80
HYDRAULIC PIPING (MAIN PUMP CHARGE LINE) (SERIAL NO. 60501-60576)	502	1 -82
HYDRAULIC PIPING (MAIN PUMP CHARGE LINE) (SERIAL NO. 60577-60650)	502A	1 -84
HYDRAULIC PIPING (MAIN PUMP CHARGE LINE) (SERIAL NO. 60651-)	502B	1 -86
HYDRAULIC PIPING (HST MAIN LINE) (SERIAL NO. 60501-60576)	503	1 -88
HYDRAULIC PIPING (HST MAIN LINE) (SERIAL NO. 60577-)	503A	1 -90
HYDRAULIC PIPING (PARKING BRAKE AND H-L SPEED SELECTOR VALVE LINE) (SERIAL NO. 60501-60576)	504	1 -92
HYDRAULIC PIPING (PARKING BRAKE AND H-L SPEED SELECTOR VALVE LINE) (SERIAL NO. 60577-60650)	504A	1 -94
HYDRAULIC PIPING (PARKING BRAKE AND H-L SPEED SELECTOR VALVE LINE) (SERIAL NO. 60651-)	504B	1 -96
HYDRAULIC PIPING (OIL COOLER AND RETURN LINE) (SERIAL NO. 60501-60576)	505	1 -98
HYDRAULIC PIPING (OIL COOLER AND RETURN LINE) (SERIAL NO. 60577-60650)	505A	1 -100
HYDRAULIC PIPING (OIL COOLER AND RETURN LINE) (SERIAL NO. 60651-)	505B	1 -104
HYDRAULIC PIPING (MAIN PUMP RETURN LINE) (SERIAL NO. 60577-60650)	506	1 -108
HYDRAULIC OIL TANK	551	1 -110
HYDRAULIC OIL FILTER (SERIAL NO. 60501-60576)	555	1 -112
HYDRAULIC OIL FILTER (SERIAL NO. 60577-)	555A	1 -114
DUMP BODY RELATED PARTS	601	1 -116
ELECTRICAL SYSTEM (INSTRUMENT PANEL AND CONTROL BOX) (SERIAL NO. 60501-60576)	701	1 -118
ELECTRICAL SYSTEM (INSTRUMENT PANEL AND CONTROL BOX) (SERIAL NO. 60577-60650)	701A	1 -120
ELECTRICAL SYSTEM (INSTRUMENT PANEL AND CONTROL BOX) (SERIAL NO. 60651-)	701B	1 -122
ELECTRICAL SYSTEM (RELAYS AND FUSE BOX) (SERIAL NO. 60501-60650)	705	1 -124
ELECTRICAL SYSTEM (RELAYS AND FUSE BOX) (SERIAL NO. 60651-)	705A	1 -126
ELECTRICAL SYSTEM (1/4) (WIRING HARNESS AND LAMPS) (SERIAL NO. 60501-60650)	711	1 -128
ELECTRICAL SYSTEM (1/4) (WIRING HARNESS AND LAMPS) (SERIAL NO. 60651-)	711A	1 -132
ELECTRICAL SYSTEM (2/4) (CHASSIS WIRING DIAGRAM)	712	1 -136
ELECTRICAL SYSTEM (3/4) (BATTERY AND BATTERY RELAY) (SERIAL NO. 60501-60650)	715	1 -138
ELECTRICAL SYSTEM (3/4) (BATTERY AND BATTERY RELAY) (SERIAL NO. 60651-)	715A	1 -140

Item	FIG. No.	PAGE
ELECTRICAL SYSTEM (4/4) (BATTERY WIRING DIAGRAM)	716	1 -142
MARKS AND PLATES (JAPANESE)	801	1 -144
MARKS AND PLATES (ENGLISH)	811	1 -146
NUMERICAL INDEX	—	9 - 1

MST-600VD

FIG.101 ENGINE RELATED PARTS (ENGINE MOUNTING PARTS AND RADIATOR) (SERIAL NO. 60501-60650)

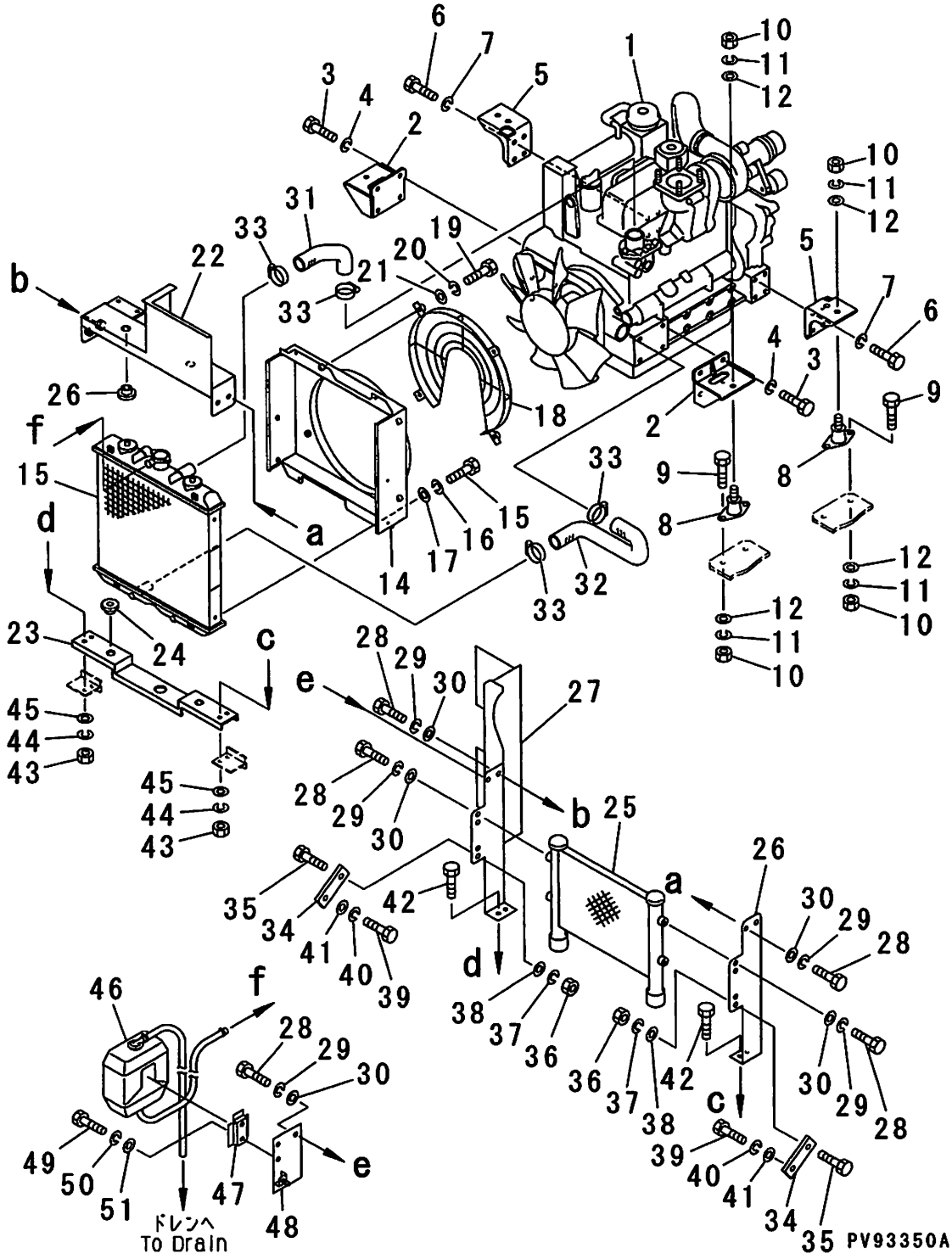

FIG.101

INDEX	PART NO.	DESCRIPTION	Q'TY	SERIAL NO.
1	1-50100-3000	ENGINE ASS'Y (KUBOTA V3307-DI-TE3B)	1	60501 ~ 60650
2	1-50110-3110	FRONT SIDE BRACKET	2	60501 ~ 60650
3	0-1000-31430	BOLT (M14X30)	8	60501 ~ 60650
4	0-1100-01435	SPRING WASHER (M14)	8	60501 ~ 60650
5	1-50110-3120	REAR SIDE BRACKET	2	60501 ~ 60650
6	0-1000-31230	BOLT (M12X30)	8	60501 ~ 60650
7	0-1100-01230	SPRING WASHER (M12)	8	60501 ~ 60650
8	1-11110-1110	CUSHON	4	60501 ~ 60650
9	0-1000-31235	BOLT (M12X35)	8	60501 ~ 60650
10	0-1200-01210	NUT (M12)	12	60501 ~ 60650
11	0-1100-01230	SPRING WASHER (M12)	12	60501 ~ 60650
12	0-1120-01223	PLANE WASHER (M12)	12	60501 ~ 60650
13	1-50140-0030	RADIATOR ASS'Y	1	60501 ~ 60650
14	1-50140-3110	RADIATOR GUARD (ME049385)	1	60501 ~ 60650
15	0-1000-00616	BOLT (M6X16)	4	60501 ~ 60650
16	0-1100-00615	SPRING WASHER (M6)	4	60501 ~ 60650
17	0-1120-00616	PLANE WASHER (M6)	4	60501 ~ 60650
18	1-50140-3180	FAN GUARD	1	60501 ~ 60650
19	0-1000-01020	BOLT (M10X20)	4	60501 ~ 60650
20	0-1100-01025	SPRING WASHER (M10)	4	60501 ~ 60650
21	0-1120-01020	PLANE WASHER (M10)	4	60501 ~ 60650
22	1-50140-3120	RADIATOR TOP COVER	1	60501 ~ 60650
23	1-50140-3130	RADIATOR BOTTOM COVER	1	60501 ~ 60650
24	1-50140-3140	CUSHON RUBBER (34070-16030)	4	60501 ~ 60650
25	1-31140-1210	OIL COOLER ASS'Y (N86041000)	1	60501 ~ 60650
26	1-50140-3250	LEFT SIDE BRACKET	1	60501 ~ 60650
27	1-50140-3260	RIGHT SIDE BRACKET	1	60501 ~ 60650
28	0-1000-00820	BOLT (M8X20)	8	60501 ~ 60650
29	0-1100-00820	SPRING WASHER (M8)	8	60501 ~ 60650
30	0-1120-00816	PLANE WASHER (M8)	8	60501 ~ 60650
31	1-50140-3310	INLET HOSE (929080-2)	1	60501 ~ 60650
32	1-50140-3320	OUTLET HOSE (929080-1)	1	60501 ~ 60650
33	0-2710-00056	CLAMP	4	60501 ~ 60650
34	1-50140-3270	STAY	2	60501 ~ 60650
35	0-1000-00835	BOLT (M8X35)	2	60501 ~ 60650
36	0-1200-00806	NUT (M8)	2	60501 ~ 60650
37	0-1100-00820	SPRING WASHER (M8)	2	60501 ~ 60650
38	0-1120-00816	PLANE WASHER (M8)	2	60501 ~ 60650
39	0-1000-01030	BOLT (M10X30)	2	60501 ~ 60650
40	0-1100-01025	SPRING WASHER (M10)	2	60501 ~ 60650

FIG.101

INDEX	PART NO.	DESCRIPTION	Q'TY	SERIAL NO.
41	0-1120-01020	PLANE WASHER (M10)	2	60501 ~ 60650
42	0-1000-01030	BOLT (M10X30)	4	60501 ~ 60650
43	0-1200-01008	NUT (M10)	4	60501 ~ 60650
44	0-1100-01025	SPRING WASHER (M10)	4	60501 ~ 60650
45	0-1120-01020	PLANE WASHER (M10)	4	60501 ~ 60650
46	NKS042-00392	RESERVE TANK	1	60501 ~ 60650
47	NKS402-00900	BRACKET	1	60501 ~ 60650
48	NKS042-00914	STAY	1	60501 ~ 60650
49	0-1000-00616	BOLT (M6X16)	2	60501 ~ 60650
50	0-1100-00615	SPRING WASHER (M6)	2	60501 ~ 60650
51	0-1120-00616	PLANE WASHER (M6)	2	60501 ~ 60650

FIG.101A ENGINE RELATED PARTS (ENGINE MOUNTING PARTS AND RADIATOR) (SERIAL NO. 60651-)

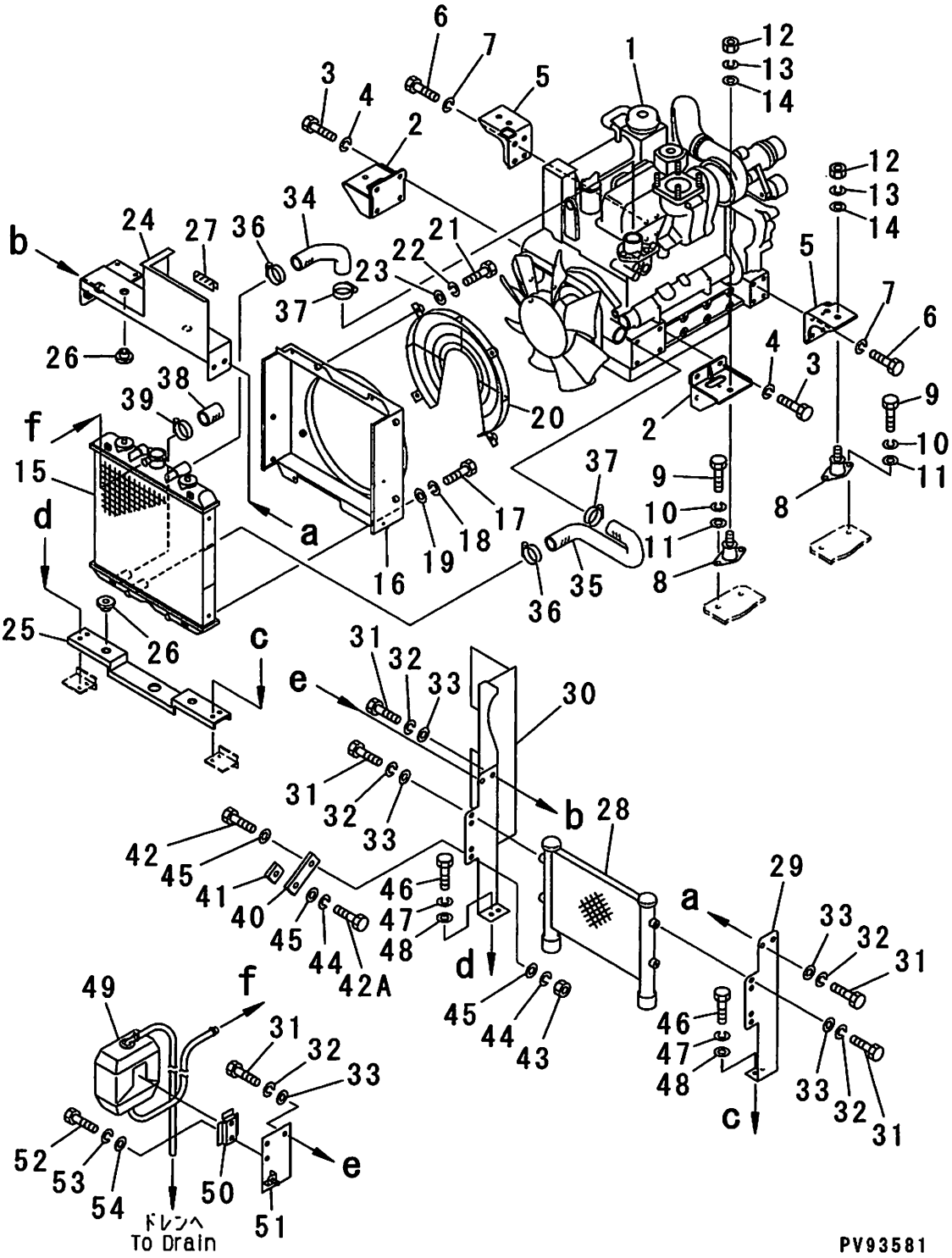

FIG.101A

INDEX	PART NO.	DESCRIPTION	Q'TY	SERIAL NO.
1	1-50100-3000	ENGINE ASS'Y (KUBOTA V3307-DI-TE3B)	1	60651 ~
2	1-50110-3110	FRONT SIDE BRACKET	2	60651 ~
3	0-1000-31430	BOLT (M14X30)	8	60651 ~
4	0-1100-01435	SPRING WASHER (M14)	8	60651 ~
5	1-50110-3120	REAR SIDE BRACKET	2	60651 ~
6	0-1000-31230	BOLT (M12X30)	8	60651 ~
7	0-1100-01225	SPRING WASHER (M12)	8	60651 ~
8	1-11110-1110	CUSHON	4	60651 ~
9	0-1000-31235	BOLT (M12X35)	8	60651 ~
10	0-1100-01230	SPRING WASHER (M12)	8	60651 ~
11	0-1120-01223	PLANE WASHER (M12)	8	60651 ~
12	0-1200-01210	NUT (M12)	4	60651 ~
13	0-1100-01230	SPRING WASHER (M12)	4	60651 ~
14	0-1120-01223	PLANE WASHER (M12)	4	60651 ~
15	1-50140-0030	RADIATOR ASS'Y	1	60651 ~
16	1-50140-3110	RADIATOR GUARD	1	60651 ~
17	0-1000-00616	BOLT (M6X16)	4	60651 ~
18	0-1100-00615	SPRING WASHER (M6)	4	60651 ~
19	0-1120-00616	PLANE WASHER (M6)	4	60651 ~
20	1-50140-3180	RADIATOR GUARD (ME049385)	1	60651 ~
21	0-1000-01020	BOLT (M10X20)	4	60651 ~
22	0-1100-01025	SPRING WASHER (M10)	4	60651 ~
23	0-1120-01020	PLANE WASHER (M10)	4	60651 ~
24	1-50140-3120	RADIATOR TOP COVER	1	60651 ~
25	1-50140-3130	RADIATOR BOTTOM COVER	1	60651 ~
26	1-50140-3140	CUSHON RUBBER (34070-16030)	4	60651 ~
27	NK0813-07007	WEATHER-STRIP	1	60651 ~
28	1-31140-1210	OIL COOLER ASS'Y (N86041000)	1	60651 ~
29	1-50140-3250	LEFT SIDE BRACKET	1	60651 ~
30	1-50140-3260	RIGHT SIDE BRACKET	1	60651 ~
31	0-1000-00820	BOLT (M8X20)	8	60651 ~
32	0-1100-00820	SPRING WASHER (M8)	8	60651 ~
33	0-1120-00816	PLANE WASHER (M8)	8	60651 ~
34	1-50140-3310	INLET HOSE (929080-2)	1	60651 ~
35	1-50140-3320	OUTLET HOSE (929080-1)	1	60651 ~
36	NKS042-00908	CLAMP	2	60651 ~
37	NKS042-00909	CLAMP	2	60651 ~
38	NKS042-00941	CAP	1	60651 ~
39	0-2710-00024	CLAMP (φ 24)	1	60651 ~
40	1-50140-3270	STAY	2	60651 ~

FIG.101A

INDEX	PART NO.	DESCRIPTION	Q'TY	SERIAL NO.
41	NKS042-00938	PLATE	1	60651 ~
42	0-1000-00825	BOLT (M8X25)	1	60651 ~
42A	0-1000-00825	BOLT (M8X25)	1	60651 ~ 60674
	0-1000-00840	BOLT (M8X40)	1	60675 ~
43	0-1200-00806	NUT (M8)	1	60651 ~
44	0-1100-00820	SPRING WASHER (M8)	2	60651 ~
45	0-1120-00816	PLANE WASHER (M8)	3	60651 ~
46	0-1000-01025	BOLT (M10X25)	4	60651 ~
47	0-1100-01025	SPRING WASHER (M10)	4	60651 ~
48	0-1120-01020	PLANE WASHER (M10)	4	60651 ~
49	NKS042-00392	RESERVE TANK	1	60651 ~ 60682
	NKS042-00946	RESERVE TANK	1	60683 ~
50	NKS402-00900	BRACKET	1	60651 ~
51	NKS042-00914	STAY	1	60651 ~
52	0-1000-00616	BOLT (M6X16)	2	60651 ~
53	0-1100-00615	SPRING WASHER (M6)	2	60651 ~
54	0-1120-00616	PLANE WASHER (M6)	2	60651 ~

FIG.105 ENGINE RELATED PARTS (MAIN PUMP AND MOUNTING PARTS)
(SERIAL NO. 60501-60576)

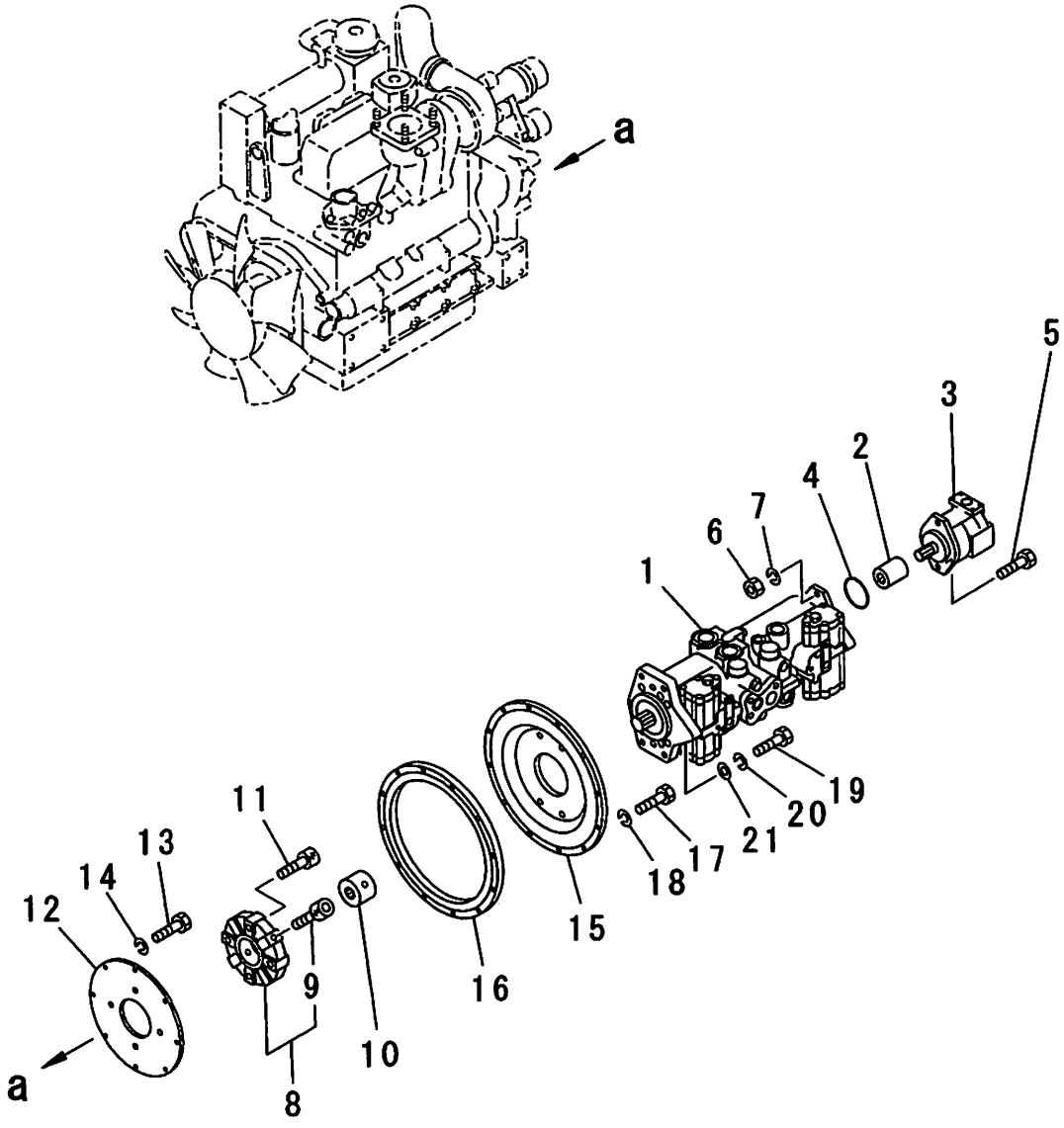

PV93351

FIG.105

INDEX	PART NO.	DESCRIPTION	Q'TY	SERIAL NO.
1	1-50610-0010	MAIN PUMP ASS'Y (PV4646)	1	60501 ~ 60576
2	1-51610-1110	COUPLING	1	60501 ~ 60576
3	1-50610-0020	GEAR PUMP ASS'Y (SAR1-28)	1	60501 ~ 60576
4	1-51610-1120	O-RING	1	60501 ~ 60576
5	0-1000-31050	BOLT (M10X50)	2	60501 ~ 60576
6	0-1200-31008	NUT (M10)	2	60501 ~ 60576
7	0-1100-31025	SPRING WASHER (M10)	2	60501 ~ 60576
8	1-30160-1110	RUBBER COUPLING (CF-A-050-OB-1360)	1	60501 ~ 60576
9	1-11160-1120	·BOLT	4	60501 ~ 60576
10	1-50160-1130	BOSS	1	60501 ~ 60576
11	1-11160-1120	BOLT	4	60501 ~ 60576
12	1-50160-3210	PLATE	1	60501 ~ 60576
13	0-1000-31030	BOLT (M10X30)	8	60501 ~ 60576
14	0-1100-01025	SPRING WASHER (M10)	8	60501 ~ 60576
15	1-50160-3150	COVER	1	60501 ~ 60576
16	1-50160-3160	SPACER	1	60501 ~ 60576
17	0-1000-31045	BOLT (M10X45)	12	60501 ~ 60576
18	0-1100-01025	SPRING WASHER (M10)	12	60501 ~ 60576
19	0-1000-31240	BOLT (M12X40)	4	60501 ~ 60576
20	0-1100-31230	SPRING WASHER (M12)	4	60501 ~ 60576
21	0-1120-01223	PLANE WASHER (M12)	4	60501 ~ 60576

FIG.105A ENGINE RELATED PARTS (MAIN PUMP AND MOUNTING PARTS)
(SERIAL NO. 60577-60650)

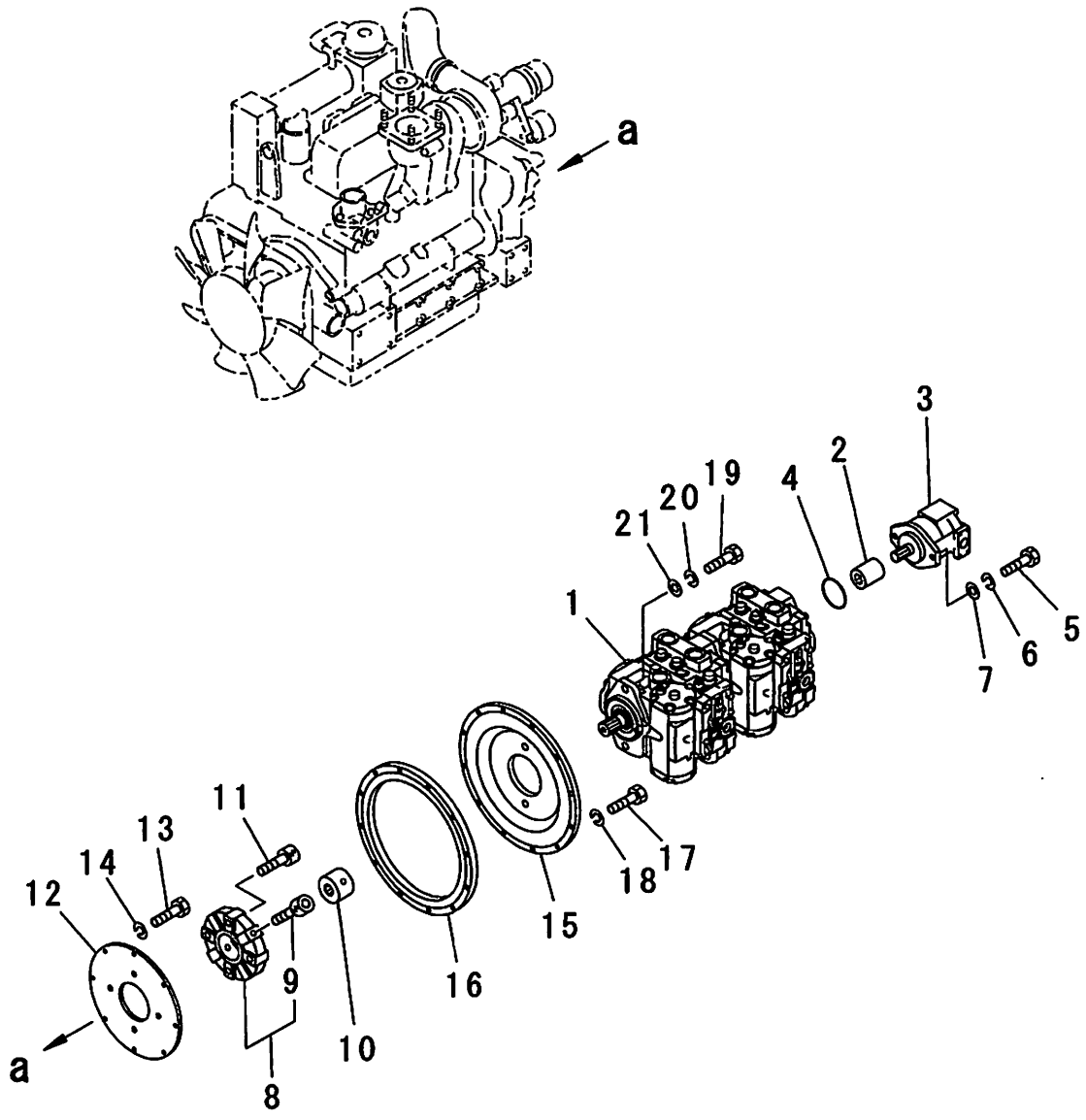

FIG.105A

INDEX	PART NO.	DESCRIPTION	Q'TY	SERIAL NO.
1	1-50610-0200	MAIN PUMP ASS'Y (PV5151)	1	60577 ~ 60650
2	1-51610-1110	COUPLING	1	60577 ~ 60650
3	1-50610-0020	GEAR PUMP ASS'Y (SAR1-28)	1	60577 ~ 60650
4	1-51610-1120	O-RING	1	60577 ~ 60650
5	0-1500-00838	BOLT (UNC1/2X38)	2	60577 ~ 60650
6	0-1700-00832	SPRING WASHER (1/2")	2	60577 ~ 60650
7	0-1710-00823	PLANE WASHER (1/2")	2	60577 ~ 60650
8	1-30160-1110	RUBBER COUPLING (CF-A-050-OB-1360)	1	60577 ~ 60650
9	1-11160-1120	•BOLT	4	60577 ~ 60650
10	1-50160-1130	BOSS	1	60577 ~ 60650
11	1-11160-1120	BOLT	4	60577 ~ 60650
12	1-50160-3210	PLATE	1	60577 ~ 60650
13	0-1000-31030	BOLT (M10X30)	8	60577 ~ 60650
14	0-1100-01025	SPRING WASHER (M10)	8	60577 ~ 60650
15	1-50160-3151	COVER	1	60577 ~ 60650
16	1-50160-3160	SPACER	1	60577 ~ 60650
17	0-1000-31045	BOLT (M10X45)	12	60577 ~ 60650
18	0-1100-01025	SPRING WASHER (M10)	12	60577 ~ 60650
19	0-1000-31435	BOLT (M14X35)	4	60577 ~ 60650
20	0-1100-31435	SPRING WASHER (M14)	4	60577 ~ 60650
21	0-1120-01425	PLANE WASHER (M14)	4	60577 ~ 60650

FIG.105B ENGINE RELATED PARTS (MAIN PUMP AND MOUNTING PARTS)
(SERIAL NO. 60651-)

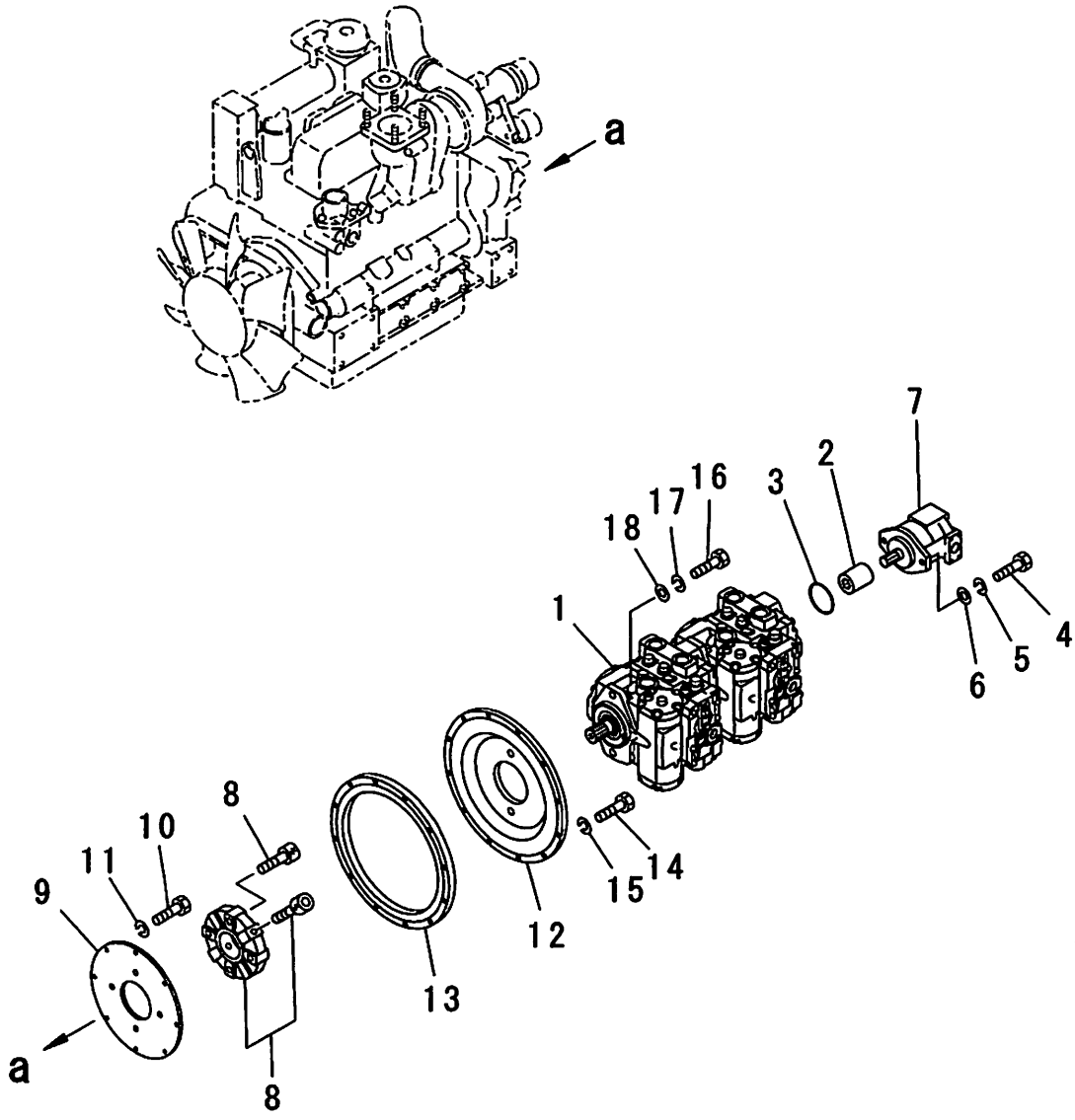

PV93582

FIG.105B

INDEX	PART NO.	DESCRIPTION	Q'TY	SERIAL NO.
1	1-50610-0200	MAIN PUMP ASS'Y (PV5151)	1	60651 ~
2	1-51610-1110	COUPLING	1	60651 ~
3	1-50610-0020	GEAR PUMP ASS'Y (SAR2-28)	1	60651 ~
4	1-51610-1120	O-RING	1	60651 ~
5	0-1500-00838	BOLT (UNC1/2X38)	2	60651 ~
6	0-1700-00832	SPRING WASHER (1/2")	2	60651 ~
7	0-1710-00823	PLANE WASHER (1/2")	2	60651 ~
8	NKS042-00904	RUBBER COUPLING	1	60651 ~
9	1-50160-3210	PLATE	1	60651 ~
10	0-1000-31030	BOLT (M10X30)	8	60651 ~
11	0-1100-01025	SPRING WASHER (M10)	8	60651 ~
12	1-50160-3151	COVER	1	60651 ~
13	1-50160-3160	SPACER	1	60651 ~
14	0-1000-31045	BOLT (M10X45)	12	60651 ~
15	0-1100-01025	SPRING WASHER (M10)	12	60651 ~
16	0-1000-31435	BOLT (M14X35)	4	60651 ~
17	0-1100-31435	SPRING WASHER (M14)	4	60651 ~
18	0-1120-01425	PLANE WASHER (M14)	4	60651 ~

FIG.111 ENGINE RELATED PARTS (AIR INTAKE SYSTEM)
(SERIAL NO. 60501-60674)

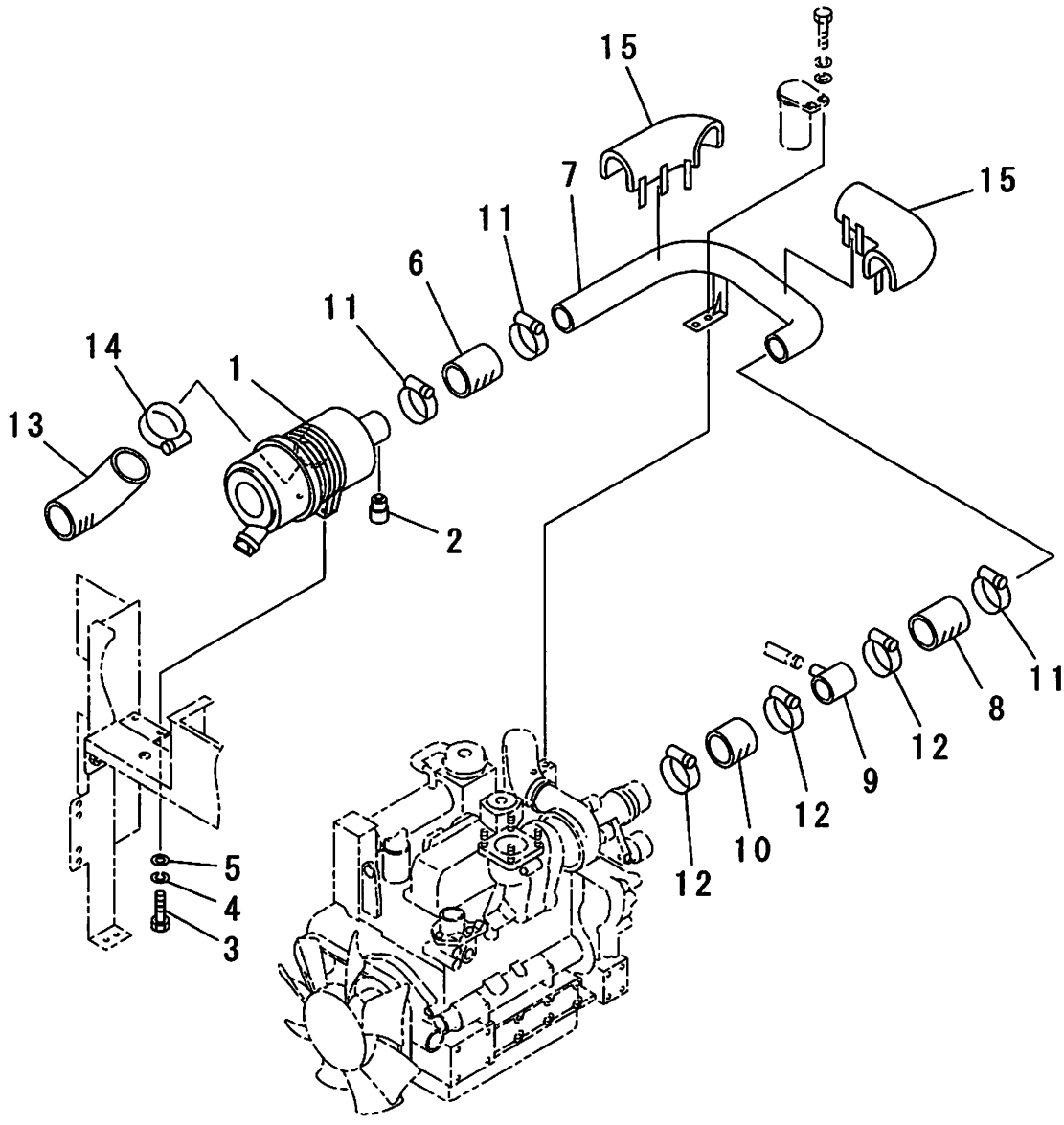

PV93352

FIG.111

INDEX	PART NO.	DESCRIPTION	Q'TY	SERIAL NO.
1	1-50120-0030	AIR CLEANER ASS'Y (FPG078106)	1	60501 ~ 60674
	1-50120-1120	·OUTER ELEMENT (P827653)	1	60501 ~ 60674
	(☆1-50120-1130)	·INNER ELEMENT (P829332)	1	60501 ~ 60674
2	0-5620-00000	·DUST INDICATOR	1	60501 ~ 60674
3	0-1000-00820	BOLT (M8X20)	4	60501 ~ 60674
4	0-1100-00820	SPRING WASHER (M8)	4	60501 ~ 60674
5	0-1120-00816	PLANE WASHER (M8)	4	60501 ~ 60674
6	1-50120-3310	JOINT HOSE (929080-6)	1	60501 ~ 60674
7	1-50120-3320	JOINT PIPE	1	60501 ~ 60674
8	1-50120-3330	JOINT HOSE	1	60501 ~ 60674
9	1-50120-3340	JOINT PIPE	1	60501 ~ 60674
10	1-50120-3350	JOINT HOSE	1	60501 ~ 60674
11	0-2700-10090	CLAMP (ABA70-90)	3	60501 ~ 60674
12	0-2700-10065	CLAMP (ABA50-65)	3	60501 ~ 60674
13	1-50120-3360	INTAKE AIR HOSE	1	60501 ~ 60674
14	0-2700-10090	CLAMP (ABA70-90)	1	60501 ~ 60674
15	1-64130-3010	INSULATION COVER (MOK-S-002)	2	60501 ~ 60674

FIG.111A ENGINE RELATED PARTS (AIR INTAKE SYSTEM)
(SERIAL NO. 60675 -)

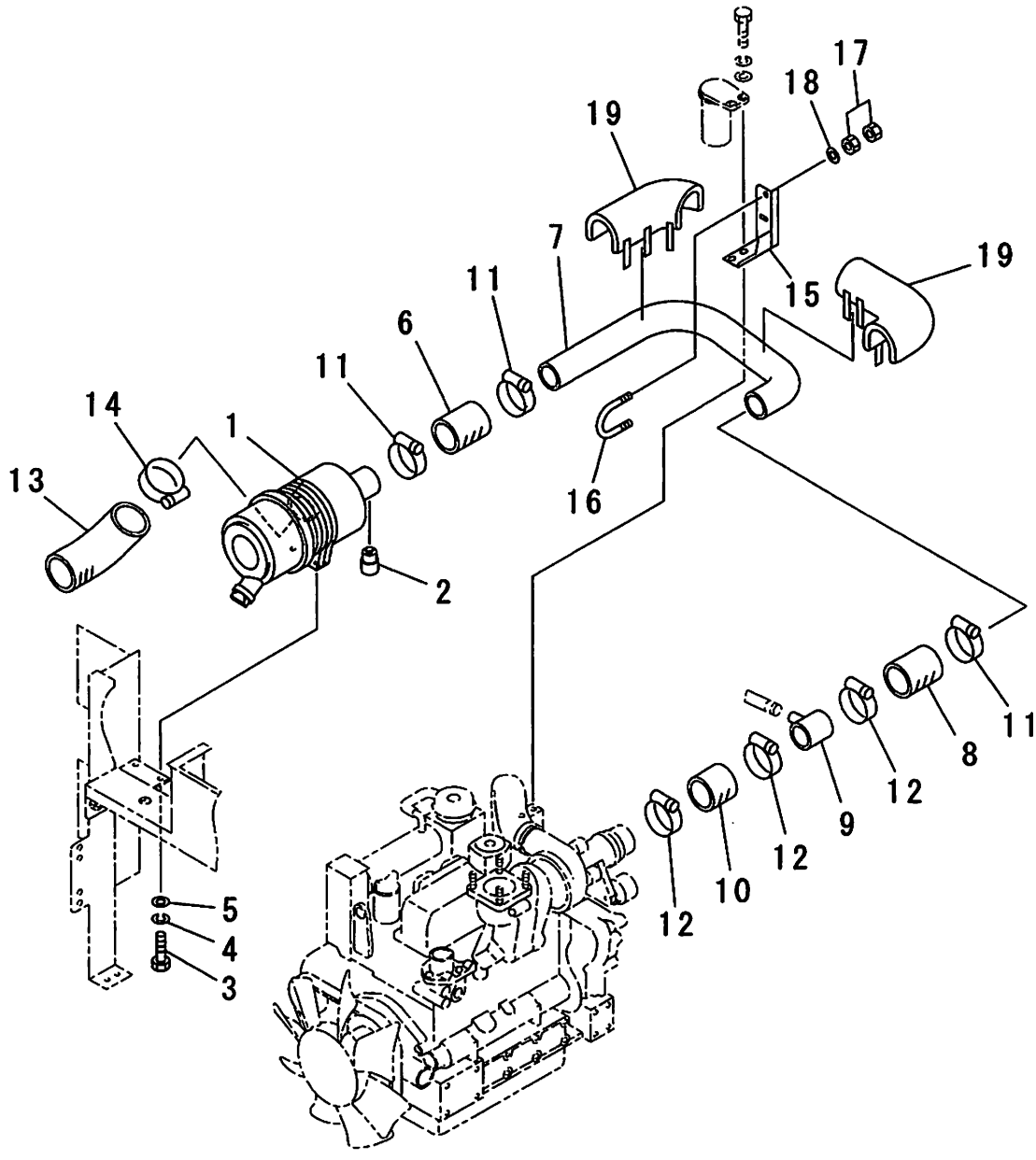

PV93610

FIG.111A

INDEX	PART NO.	DESCRIPTION	Q'TY	SERIAL NO.
1	1-50120-0030	AIR CLEANER ASS'Y (FPG078106)	1	60675 ~
	1-50120-1120	·OUTER ELEMENT (P827653)	1	60675 ~
	(☆1-50120-1130)	·INNER ELEMENT (P829332)	1	60675 ~
2	0-5620-00000	·DUST INDICATOR	1	60675 ~
3	0-1000-00820	BOLT (M8X20)	4	60675 ~
4	0-1100-00820	SPRING WASHER (M8)	4	60675 ~
5	0-1120-00816	PLANE WASHER (M8)	4	60675 ~
6	1-50120-3310	JOINT HOSE (929080-6)	1	60675 ~
7	1-50120-3321	JOINT PIPE	1	60675 ~
8	1-50120-3330	JOINT HOSE	1	60675 ~
9	1-50120-3340	JOINT PIPE	1	60675 ~
10	1-50120-3350	JOINT HOSE	1	60675 ~
11	0-2700-10090	CLAMP (ABA70-90)	3	60675 ~
12	0-2700-10065	CLAMP (ABA50-65)	3	60675 ~
13	1-50120-3360	INTAKE AIR HOSE	1	60675 ~
14	0-2700-10090	CLAMP (ABA70-90)	1	60675 ~
15	NKS043-00740	BRACKET	1	60675 ~
16	NK0205-05008	U-BOLT	1	60675 ~
17	0-1200-00806	NUT (M8)	4	60675 ~
18	0-1110-00820	PLANE WASHER (M8)	2	60675 ~
19	1-64130-3010	INSULATION COVER (MOK-S-002)	2	60675 ~

FIG.115 ENGINE RELATED PARTS (EXHAUST SYSTEM)
(SERIAL NO. 60501-60583, 60585)

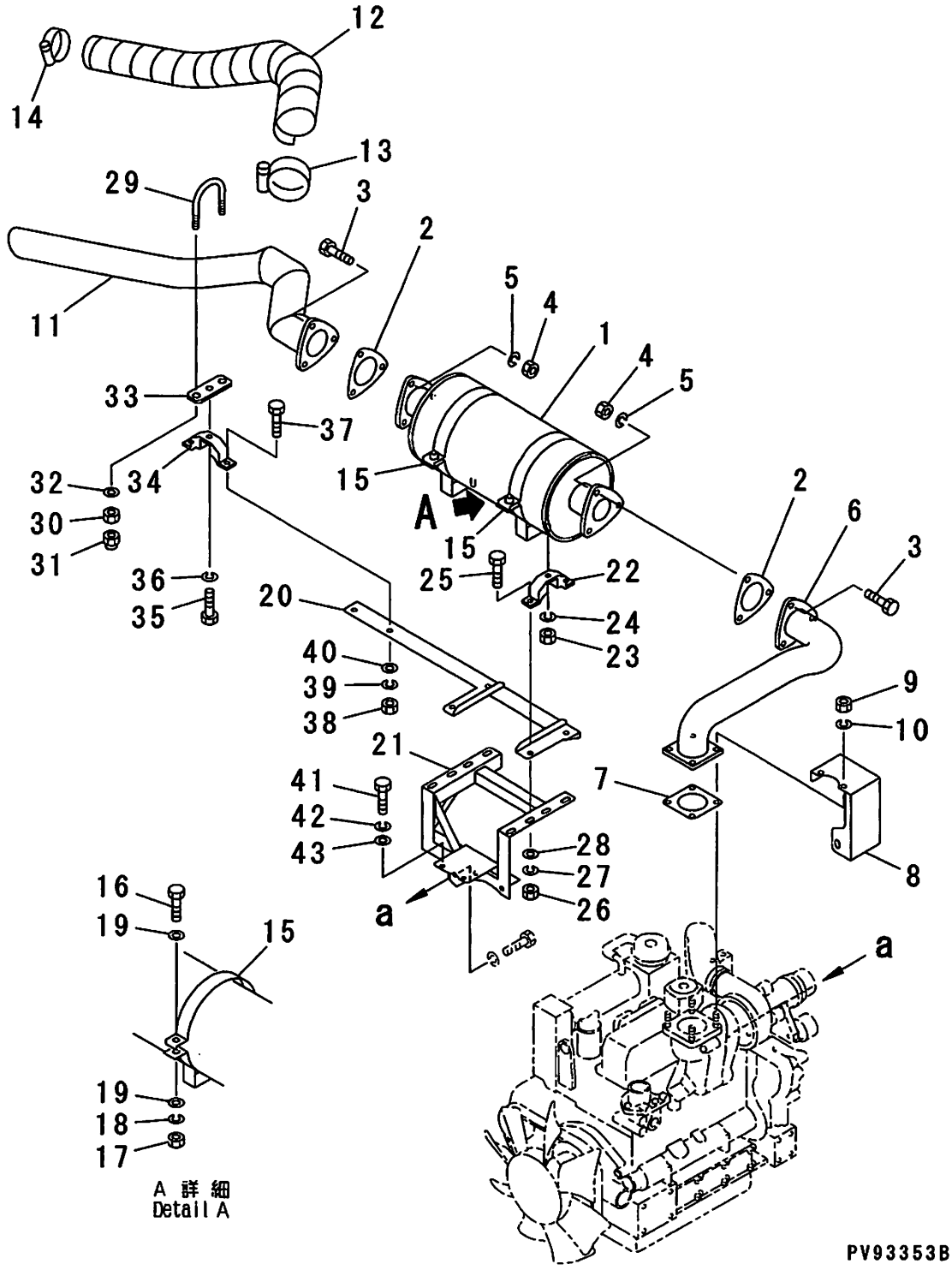

FIG.115

INDEX	PART NO.	DESCRIPTION	Q'TY	SERIAL NO. (WITHOUT 60584)
1	1-11130-1110	EXHAUST MUFFLER	1	60501 ~ 60585
2	1-11130-1140	·GASKET (4C1677)	2	60501 ~ 60585
3	0-1000-01030	·BOLT (M10X30)	6	60501 ~ 60585
4	0-1200-01008	·NUT (M10)	6	60501 ~ 60585
5	0-1100-01025	·SPRING WASHER (M10)	6	60501 ~ 60585
6	1-50130-3120	EXHAUST PIPE	1	60501 ~ 60585
7	1-50130-3210	GASKET (ME063737)	1	60501 ~ 60585
8	1-50130-3220	BRACKET	1	60501 ~ 60585
9	1-50130-3230	NUT (M10)	3	60501 ~ 60585
10	1-50130-3240	SPRING WASHER (M10)	3	60501 ~ 60585
11	1-30130-3150	EXHAUST PIPE	1	60501 ~ 60585
12	1-30130-3210	INSULATION SHEET	1	60501 ~ 60585
13	0-2700-00070	CLAMP (JUBILEE 3)	1	60501 ~ 60585
14	0-2700-00050	CLAMP (JUBILEE 2A)	1	60501 ~ 60585
15	1-50130-1400	BAND	2	60501 ~ 60585
16	0-1000-31050	BOLT (M10X50)	2	60501 ~ 60585
17	0-1200-31008	NUT (M10)	2	60501 ~ 60585
18	0-1100-31025	SPRING WASHER (M10)	2	60501 ~ 60585
19	0-1120-31020	PLANE WASHER (M10)	4	60501 ~ 60585
20	1-30130-3110	BRACKET	1	60501 ~ 60585
21	1-30130-3210	BRACKET	1	60501 ~ 60585
22	1-14130-1130	CUSHON (EE-4005)	2	60501 ~ 60585
23	0-1200-00806	NUT (M8)	2	60501 ~ 60585
24	0-1100-00820	SPRING WASHER (M8)	2	60501 ~ 60585
25	0-1000-00825	BOLT (M8X25)	4	60501 ~ 60585
26	0-1200-00806	NUT (M8)	4	60501 ~ 60585
27	0-1100-00820	SPRING WASHER (M8)	4	60501 ~ 60585
28	1-50130-1410	LARGE PLANE WASHER (M8)	4	60501 ~ 60585
29	1-30130-3310	U-CLAMP	1	60501 ~ 60585
30	0-1200-00806	NUT (M8)	2	60501 ~ 60585
31	0-1242-00808	U-NUT (M8)	2	60501 ~ 60585
32	0-1120-00816	PLANE WASHER (M8)	2	60501 ~ 60585
	1-30130-3160	CUSHON ASS'Y	1	60501 ~ 60585
33	(☆1-30130-3130)	·PLATE	1	60501 ~ 60585
34	(☆1-51130-1170)	·CUSHON (EE-4004)	1	60501 ~ 60585
35	(☆0-1000-00815)	·BOLT (M8X15)	1	60501 ~ 60585
36	(☆0-1100-00820)	·SPRING WASHER (M8)	1	60501 ~ 60585
37	0-1000-00620	BOLT (M6X20)	2	60501 ~ 60585
38	0-1200-00605	NUT (M6)	2	60501 ~ 60585
39	0-1100-00615	SPRING WASHER (M6)	2	60501 ~ 60585

FIG.115

INDEX	PART NO.	DESCRIPTION	Q'TY	SERIAL NO. (WITHOUT 60584)
40	0-1120-00616	PLANE WASHER (M6)	2	60501 ~ 60585
41	0-1000-00820	BOLT (M8X20)	2	60501 ~ 60585
42	0-1100-00820	SPRING WASHER (M8)	2	60501 ~ 60585
43	0-1120-00816	PLANE WASHER (M8)	2	60501 ~ 60585

FIG.115A ENGINE RELATED PARTS (EXHAUST SYSTEM)
(SERIAL NO. 60584, 60586-)

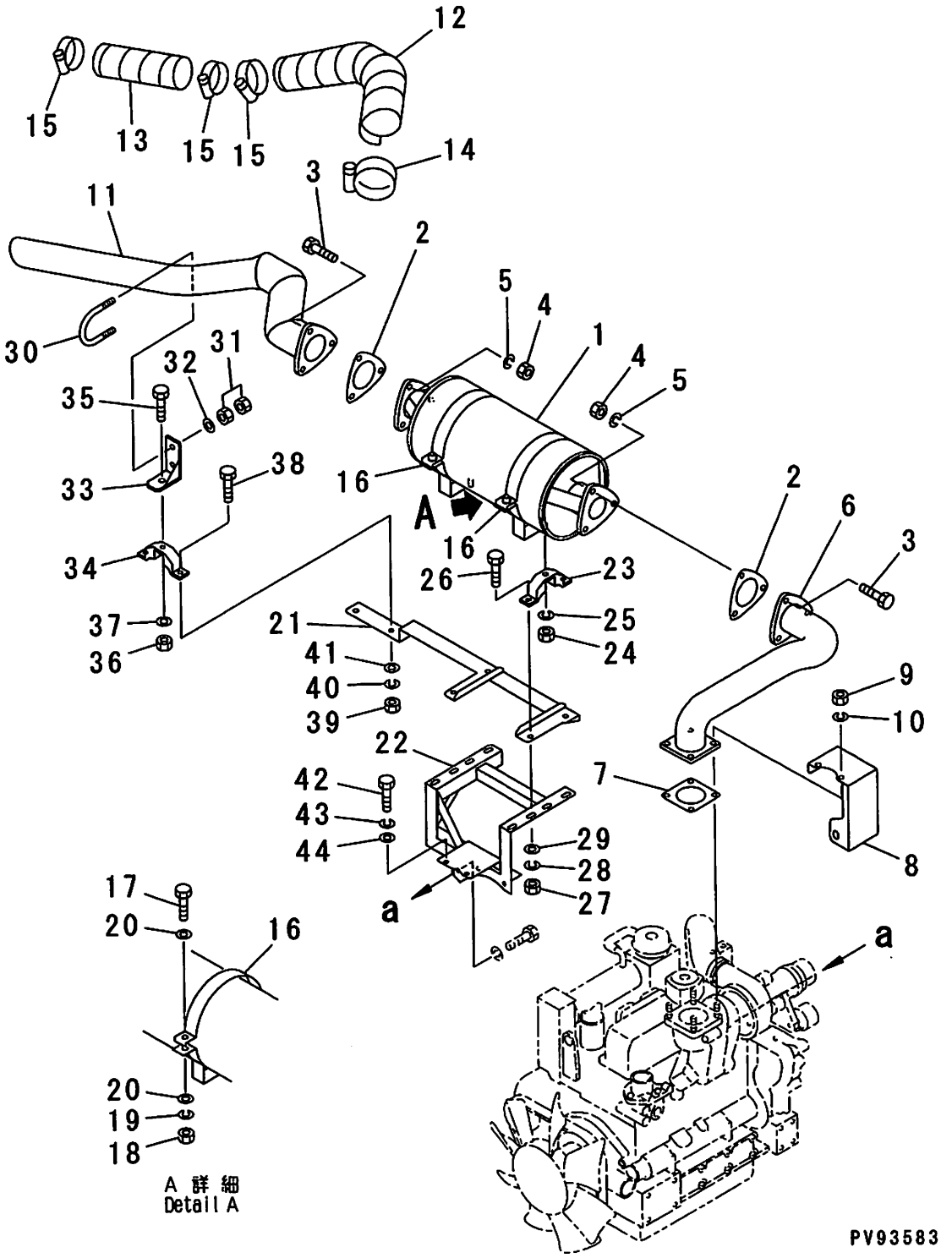

FIG.115A

INDEX	PART NO.	DESCRIPTION	Q'TY	SERIAL NO. (WITHOUT 60585)
1	1-11130-1111	EXHAUST MUFFLER	1	60584 ~ 60698
	1-11130-1112	EXHAUST MUFFLER	1	60699 ~
2	1-11130-1140	•GASKET (4C1677)	2	60584 ~
3	0-1000-01030	•BOLT (M10X30)	6	60584 ~
4	0-1200-01008	•NUT (M10)	6	60584 ~
5	0-1100-01025	•SPRING WASHER (M10)	6	60584 ~
6	1-50130-3120	EXHAUST PIPE	1	60584 ~
7	1-50130-3210	GASKET (ME063737)	1	60584 ~
8	1-50130-3220	BRACKET	1	60584 ~
9	1-50130-3230	NUT (M10)	3	60584 ~
10	1-50130-3240	SPRING WASHER (M10)	3	60584 ~
11	1-30130-3150	EXHAUST PIPE	1	60584 ~
12	1-30130-3310	INSULATION SHEET	1	60584 ~
13	1-30130-3320	INSULATION SHEET	1	60584 ~
14	0-2700-00070	CLAMP (JUBILEE 3)	1	60584 ~
15	0-2700-00050	CLAMP (JUBILEE 2A)	3	60584 ~
16	1-50130-1401	BAND	2	60584 ~ 60698
	1-50130-1402	BAND	2	60699 ~
17	0-1000-31050	BOLT (M10X50)	2	60584 ~
18	0-1200-31008	NUT (M10)	2	60584 ~
19	0-1100-31025	SPRING WASHER (M10)	2	60584 ~
20	0-1120-31020	PLANE WASHER (M10)	4	60584 ~
21	1-30130-3111	BRACKET	1	60584 ~
22	1-30130-3210	BRACKET	1	60584 ~
23	1-14130-1130	CUSHON (EE-4005)	2	60584 ~
24	0-1200-00806	NUT (M8)	2	60584 ~
25	0-1100-00820	SPRING WASHER (M8)	2	60584 ~
26	0-1000-00825	BOLT (M8X25)	4	60584 ~
27	0-1200-00806	NUT (M8)	4	60584 ~
28	0-1100-00820	SPRING WASHER (M8)	4	60584 ~
29	1-50130-1410	LARGE PLANE WASHER (M8)	4	60584 ~
30	1-30130-3310	U-CLAMP	1	60584 ~
31	0-1200-00806	NUT (M8)	4	60584 ~
32	1-50130-1410	LARGE PLANE WASHER (M8)	2	60584 ~
33	1-50130-3330	BRACKET	1	60584 ~
34	1-14130-1130	CUSHON (EE-4005)	1	60584 ~
35	0-1000-00825	BOLT (M8X25)	1	60584 ~
36	0-1200-00806	NUT (M8)	1	60584 ~
37	0-1100-00820	SPRING WASHER (M8)	1	60584 ~
38	0-1000-00825	BOLT (M8X25)	2	60584 ~

FIG.115A

INDEX	PART NO.	DESCRIPTION	Q'TY	SERIAL NO. (WITHOUT 60585)
39	0-1200-00806	NUT (M8)	2	60584 ~
40	0-1100-00820	SPRING WASHER (M8)	2	60584 ~
41	1-50130-1410	LARGE PLANE WASHER (M8)	2	60584 ~
42	0-1000-00820	BOLT (M8X20)	2	60584 ~
43	0-1100-00820	SPRING WASHER (M8)	2	60584 ~
44	0-1120-00816	PLANE WASHER (M8)	2	60584 ~

FIG.121 FUEL TANK AND FUEL PIPING (SERIAL NO. 60501-60650)

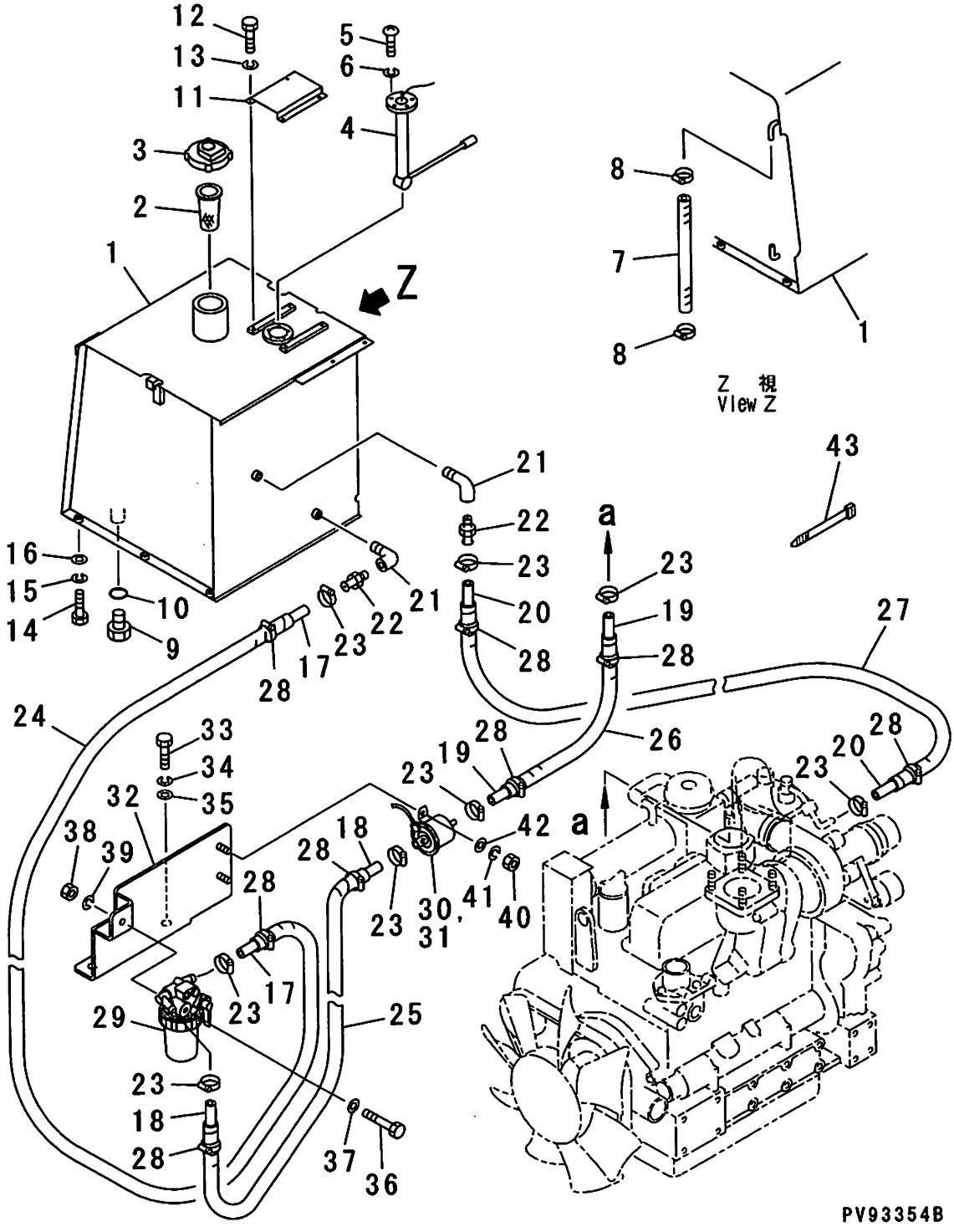

FIG.121

INDEX	PART NO.	DESCRIPTION	Q'TY	SERIAL NO.
	1-29150-0012	FUEL TANK ASS'Y	1	60501 ~ 60650
1	1-29150-1112	·FUEL TANK	1	60501 ~ 60650
2	1-51150-1130	·STRAINER	1	60501 ~ 60650
3	1-51150-1140	·CAP (WITH KEY)	1	60501 ~ 60650
	1-51150-1180	··KEY	1	60501 ~ 60650
4	1-50210-3570	FUEL LEVEL SENSOR (MFP260254ND)	1	60501 ~ 60650
5	0-1300-00410	SCREW (M4X10)	5	60501 ~ 60650
6	0-1100-00410	SPRING WASHER (M4)	5	60501 ~ 60650
7	0-2150-01035	FUEL LEVEL GAUGE TUBE	1	60501 ~ 60650
8	0-2700-00012	CLAMP (JUBILEE 000)	1	60501 ~ 60650
9	1-31150-1150	DRAIN BOLT	1	60501 ~ 60650
10	0-2010-02418	O-RING (P18)	1	60501 ~ 60650
11	1-48150-1130	COVER	1	60501 ~ 60650
12	0-1000-00612	BOLT (M6X12)	4	60501 ~ 60650
13	0-1100-00615	SPRING WASHER (M6)	4	60501 ~ 60650
14	0-1000-01020	BOLT (M10X20)	6	60501 ~ 60650
15	0-1100-01025	SPRING WASHER (M10)	6	60501 ~ 60650
16	0-1120-01020	PLANE WASHER (M10)	6	60501 ~ 60650
17	1-50150-3210	FUEL SUPPLY HOSE (φ 8X800)	1	60501 ~ 60650
18	1-50150-3220	FUEL SUPPLY HOSE (φ 8X410)	1	60501 ~ 60650
19	1-50150-3230	FUEL SUPPLY HOSE (φ 8X400)	1	60501 ~ 60650
20	1-50150-3240	FUEL RETURN HOSE (φ 8X1100)	1	60501 ~ 60650
21	0-4380-00202	ELBOW (PT1/4XPT1/4)	2	60501 ~ 60650
22	1-13150-1120	JOINT	2	60501 ~ 60650
23	0-2700-00012	CLAMP (JUBILEE 000)	8	60501 ~ 60650
24	1-50150-3310	HOSE COVER (FOR SUPPLY HOSE)	1	60501 ~ 60650
25	1-50150-3320	HOSE COVER (FOR SUPPLY HOSE)	1	60501 ~ 60650
26	1-50150-3330	HOSE COVER (FOR SUPPLY HOSE)	1	60501 ~ 60650
27	1-50150-3340	HOSE COVER (FOR RETURN HOSE)	1	60501 ~ 60650
28	0-2700-00012	CLAMP (JUBILEE 000)	8	60501 ~ 60650
29	NKS042-00395	WATER SEPARATOR	1	60501 ~ 60650
30	NKS042-00397	FUEL SUPPLY PUMP	1	60501 ~ 60650
31	NKS042-00448	CUSHON RUBBER	1	60501 ~ 60650
32	1-50520-3610	BRACKET	1	60501 ~ 60650
33	0-1000-00816	BOLT (M8X16)	2	60501 ~ 60650
34	0-1100-00820	SPRING WASHER (M8)	2	60501 ~ 60650
35	0-1120-00816	PLANE WASHER (M8)	2	60501 ~ 60650
36	0-1000-00865	BOLT (M8X65)	1	60501 ~ 60650
37	0-1120-00816	PLANE WASHER (M8)	1	60501 ~ 60650
38	0-1200-00806	NUT (M8)	1	60501 ~ 60650

FIG.121

INDEX	PART NO.	DESCRIPTION	Q'TY	SERIAL NO.
39	0-1100-00820	SPRING WASHER (M8)	1	60501 ~ 60650
40	0-1200-00605	NUT (M6)	2	60501 ~ 60650
41	0-1100-00615	SPRING WASHER (M6)	2	60501 ~ 60650
42	0-1120-00616	PLANE WASHER (M6)	2	60501 ~ 60650
43	0-2800-00202	STRAP BAND	AR	60501 ~ 60650
	0-2800-00383	STRAP BAND	AR	60501 ~ 60650

FIG.121A FUEL TANK AND FUEL PIPING (SERIAL NO. 60651-)

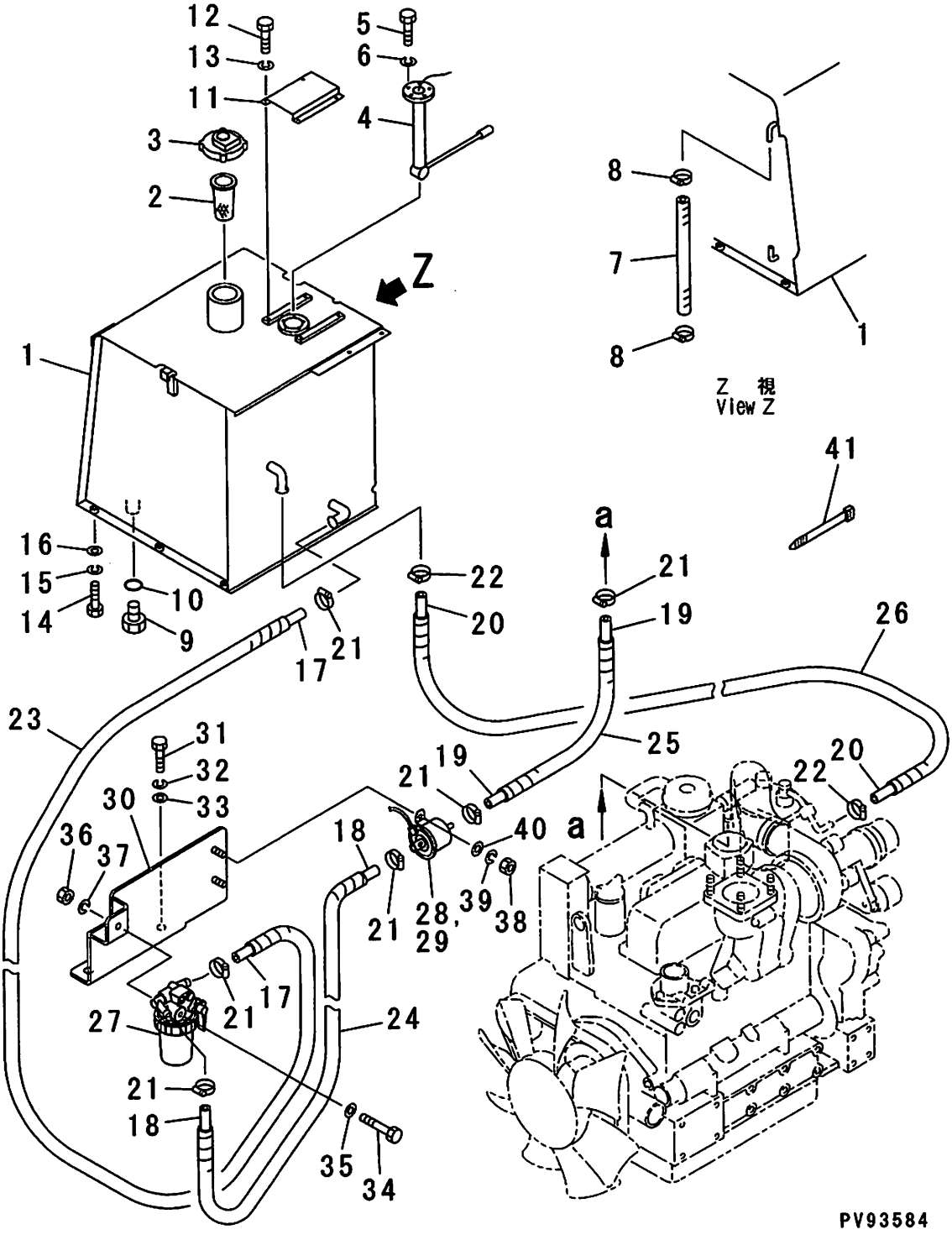

FIG.121A

INDEX	PART NO.	DESCRIPTION	Q'TY	SERIAL NO.
	1-50150-0031	FUEL TANK ASS'Y	1	60651 ~
1	1-50150-3111	·FUEL TANK	1	60651 ~
2	1-51150-1130	·STRAINER	1	60651 ~
3	1-51150-1140	·CAP (WITH KEY)	1	60651 ~
	1-51150-1180	··KEY	1	60651 ~
4	1-50210-3570	FUEL LEVEL SENSOR (MFP260254ND)	1	60651 ~
5	0-1000-00510	BOLT (M5X10)	5	60651 ~
6	0-1100-00513	SPRING WASHER (M5)	5	60651 ~
7	NK0755-95035	FUEL LEVEL GAUGE TUBE	1	60651 ~
8	NK0750-11016	CLAMP	1	60651 ~
9	NK0547-08000	DRAIN BOLT (YA1126-08)	1	60651 ~
10	0-2010-02418	·O-RING (P18)	1	60651 ~
11	1-48150-1130	COVER	1	60651 ~
12	0-1000-00612	BOLT (M6X12)	4	60651 ~
13	0-1100-00615	SPRING WASHER (M6)	4	60651 ~
14	0-1000-01025	BOLT (M10X25)	6	60651 ~
15	0-1100-01025	SPRING WASHER (M10)	6	60651 ~
16	0-1120-01020	PLANE WASHER (M10)	6	60651 ~
17	NK0753-08050	FUEL SUPPLY HOSE (φ 7.9X500)	1	60651 ~
18	NK0753-08037	FUEL SUPPLY HOSE (φ 7.9X370)	1	60651 ~
19	NK0753-08040	FUEL SUPPLY HOSE (φ 7.9X400)	1	60651 ~
20	NKS042-00906	FUEL RETURN HOSE (ENGINE ACCESSORY)	1	60651 ~
21	NK0750-06015	CLAMP (MH4)	6	60651 ~
22	NK0760-08500	CLIP (TS-085-06-00)	2	60651 ~
23	NK0880-15045	HOSE COVER (FOR SUPPLY HOSE) (φ 15.3X450)	1	60651 ~
24	NK0880-15036	HOSE COVER (FOR SUPPLY HOSE) (φ 15.3X360)	1	60651 ~
25	NK0880-15035	HOSE COVER (FOR SUPPLY HOSE) (φ 15.3X350)	1	60651 ~
26	NK0880-15095	HOSE COVER (FOR RETURN HOSE) (φ 10.7X950)	1	60651 ~
27	NKS042-00395	WATER SEPARATOR	1	60651 ~
28	NKS042-00397	FUEL SUPPLY PUMP	1	60651 ~
29	NKS042-00448	CUSHON RUBBER	1	60651 ~
30	1-50520-3610	BRACKET	1	60651 ~
31	0-1000-00816	BOLT (M8X16)	2	60651 ~
32	0-1100-00820	SPRING WASHER (M8)	2	60651 ~
33	0-1120-00816	PLANE WASHER (M8)	2	60651 ~
34	0-1000-00865	BOLT (M8X65)	1	60651 ~

FIG.121A

INDEX	PART NO.	DESCRIPTION	Q'TY	SERIAL NO.
35	0-1120-00816	PLANE WASHER (M8)	1	60651 ~
36	0-1200-00806	NUT (M8)	1	60651 ~
37	0-1100-00820	SPRING WASHER (M8)	1	60651 ~
38	0-1200-00605	NUT (M6)	2	60651 ~
39	0-1100-00615	SPRING WASHER (M6)	2	60651 ~
40	0-1120-00616	PLANE WASHER (M6)	2	60651 ~
41	0-2800-00202	STRAP BAND	AR	60651 ~
	0-2800-00383	STRAP BAND	AR	60651 ~

FIG.201 FRAME RELATED PARTS (1/5)
(ENGINE BONNET AND FRONT BUMPER) (SERIAL NO. 60501-60650)

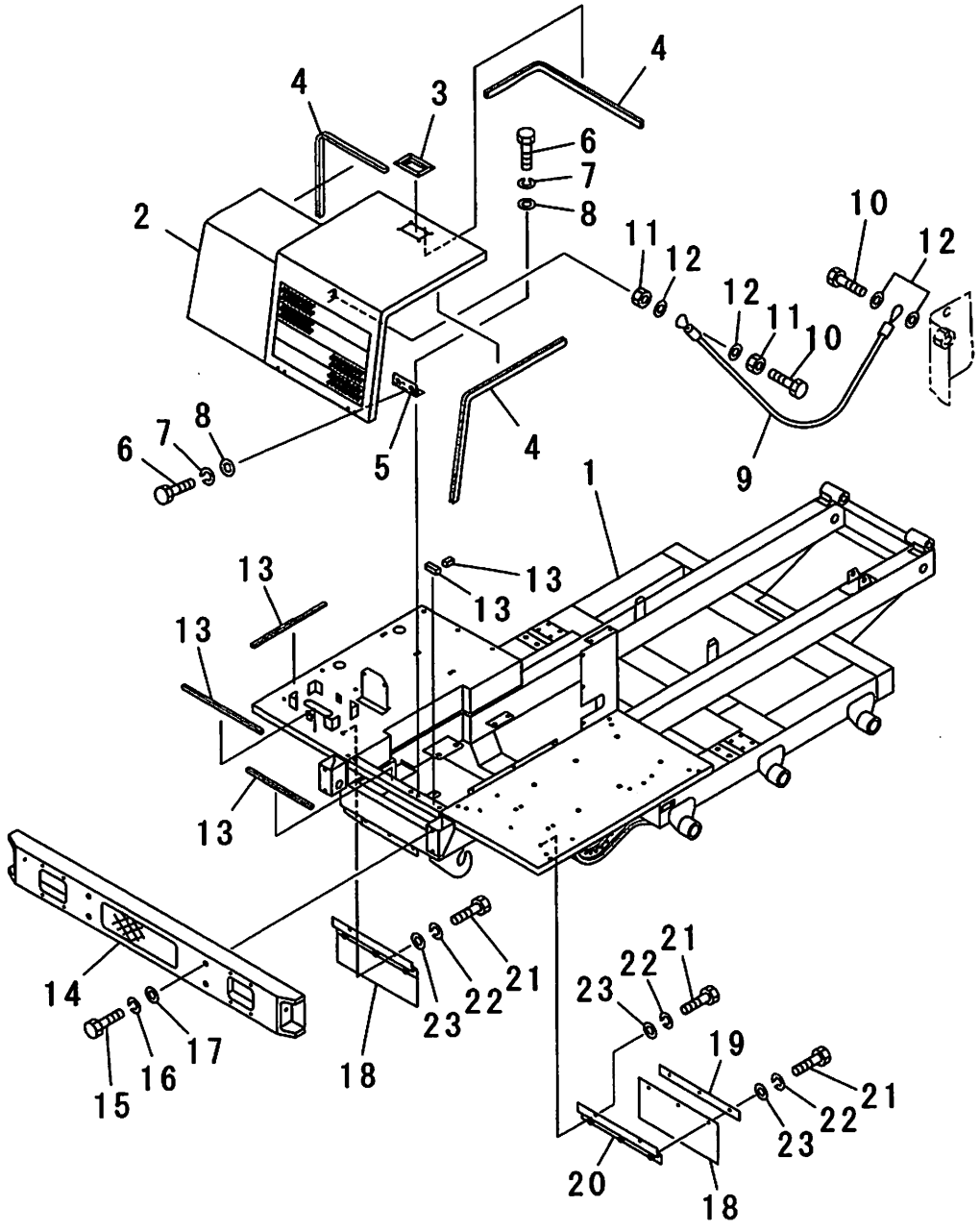

FIG.201

INDEX	PART NO.	DESCRIPTION	Q'TY	SERIAL NO.
1	1-50510-3110	MAIN FRAME	1	60501 ~ 60650
2	1-50520-3110	ENGINE BONNET	1	60501 ~ 60650
3	1-50520-3120	LOCK ASS'Y (4648839)	1	60501 ~ 60650
	1-50520-3130	·KEY (BK11-442B)	1	60501 ~ 60650
4	1-50520-3150	RUBBER SEAL (CUTTING) (FC779-3-2)	1	60501 ~ 60650
5	1-50520-3160	HINGE (B-41-2-037CH)	2	60501 ~ 60650
6	0-1000-00820	BOLT (M8X20)	8	60501 ~ 60650
7	0-1100-00820	SPRING WASHER (M8)	8	60501 ~ 60650
8	0-1120-00816	PLANE WASHER (M8)	8	60501 ~ 60650
9	1-50520-3170	CABLE (Φ 3x200)	1	60501 ~ 60650
10	0-1000-00825	BOLT (M8X25)	2	60501 ~ 60650
11	0-1200-00806	NUT (M8)	2	60501 ~ 60650
12	0-1120-00816	PLANE WASHER (M8)	4	60501 ~ 60650
13	1-50520-3190	RUBBER SHEET (CUTTING)	1	60501 ~ 60650
14	1-50520-3550	FRONT BUMPER	1	60501 ~ 60650
15	0-1000-01030	BOLT (M10X30)	4	60501 ~ 60650
16	0-1100-01025	SPRING WASHER (M10)	4	60501 ~ 60650
17	0-1120-01020	PLANE WASHER (M10)	4	60501 ~ 60650
18	1-29520-1490	RUBBER PLATE	2	60501 ~ 60650
19	1-29520-1480	BUFFER PLATE	2	60501 ~ 60650
20	1-50520-3410	BRACKET	2	60501 ~ 60650
21	0-1000-00820	BOLT (M8X20)	10	60501 ~ 60650
22	0-1100-00820	SPRING WASHER (M8)	10	60501 ~ 60650
23	0-1120-00816	PLANE WASHER (M8)	10	60501 ~ 60650

FIG.201A FRAME RELATED PARTS (1/5)
(ENGINE BONNET AND FRONT BUMPER) (SERIAL NO. 60651-)

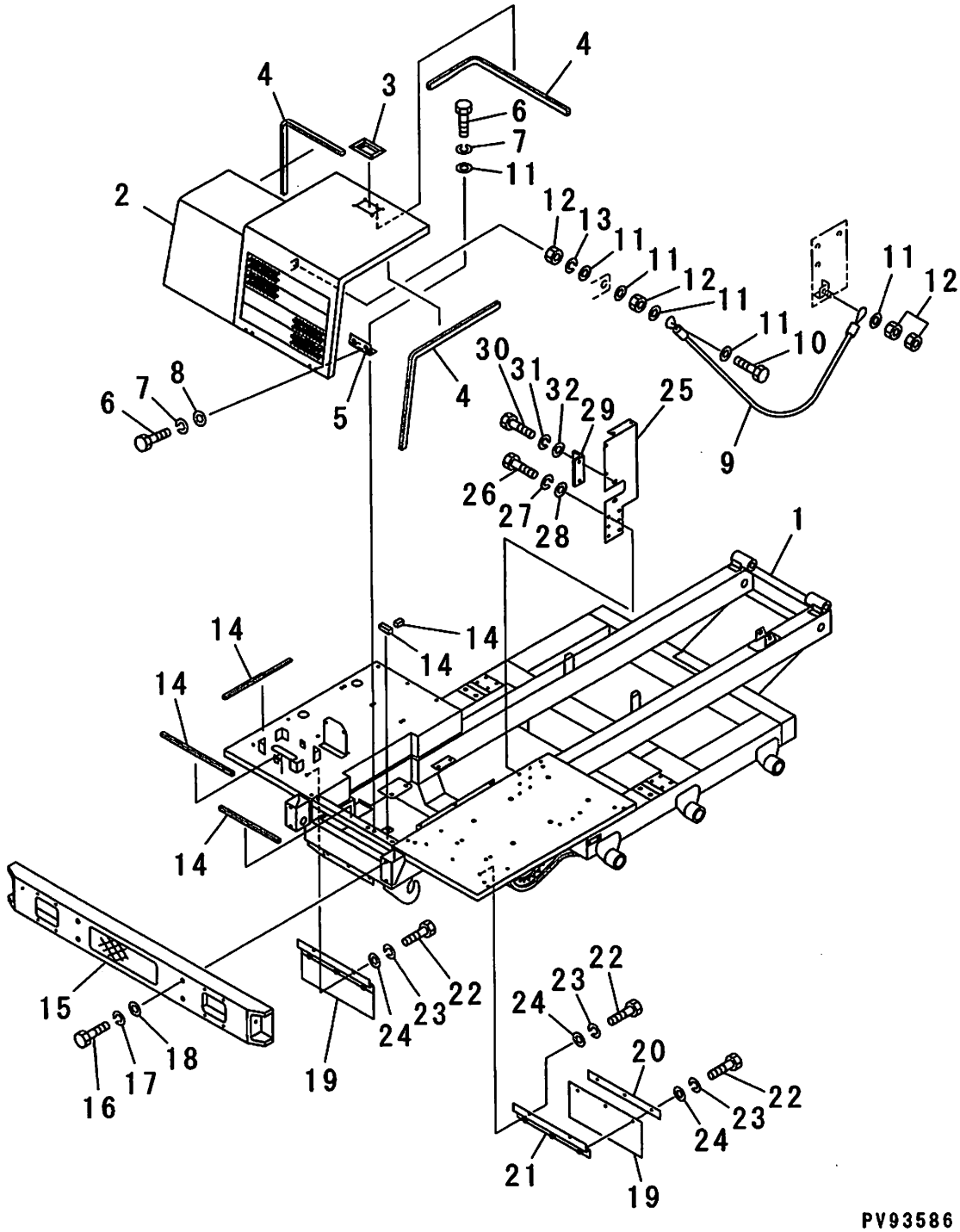

FIG.201A

INDEX	PART NO.	DESCRIPTION	Q'TY	SERIAL NO.
1	1-50510-3111	MAIN FRAME	1	60651 ~
2	1-50520-3110	ENGINE BONNET	1	60651 ~
3	1-50520-3120	LOCK ASS'Y (4648839)	1	60651 ~
	1-50520-3130	·KEY (BK11-442B)	1	60651 ~
4	1-50520-3150	RUBBER SEAL (CUTTING) (FC779-3-2)	1	60651 ~
5	1-50520-3160	HINGE (B-41-2-037CH)	2	60651 ~
6	0-1000-00820	BOLT (M8X20)	8	60651 ~
7	0-1100-00820	SPRING WASHER (M8)	8	60651 ~
8	0-1120-00816	PLANE WASHER (M8)	8	60651 ~
9	1-50520-3171	CABLE (φ 2X480)	1	60651 ~
10	0-1000-00830	BOLT (M8X30)	1	60651 ~
11	0-1120-00816	PLANE WASHER (M8)	5	60651 ~
12	0-1200-00806	NUT (M8)	4	60651 ~
13	0-1100-00820	SPRING WASHER (M8)	1	60651 ~
14	1-50520-3190	RUBBER SHEET (CUTTING)	1	60651 ~
15	1-50520-3550	FRONT BUMPER	1	60651 ~
16	0-1000-01025	BOLT (M10X25)	4	60651 ~
17	0-1100-01025	SPRING WASHER (M10)	4	60651 ~
18	0-1120-01020	PLANE WASHER (M10)	4	60651 ~
19	1-29520-1490	RUBBER PLATE	2	60651 ~
20	1-29520-1480	BUFFER PLATE	2	60651 ~
21	1-50520-3410	BRACKET	2	60651 ~
22	0-1000-00820	BOLT (M8X20)	10	60651 ~
23	0-1100-00820	SPRING WASHER (M8)	10	60651 ~
24	0-1120-00816	PLANE WASHER (M8)	10	60651 ~
25	NKS012-01646	BRACKET	1	60651 ~
26	0-1000-01025	BOLT (M10X25)	6	60651 ~
27	0-1100-01025	SPRING WASHER (M10)	6	60651 ~
28	0-1120-01020	PLANE WASHER (M10)	6	60651 ~
29	NKS012-01658	ANGLE	1	60651 ~
30	0-1000-01235	BOLT (M12X35)	2	60651 ~
31	0-1100-01230	SPRING WASHER (M12)	2	60651 ~
32	0-1120-01225	PLANE WASHER (M12)	2	60651 ~

FIG.202 FRAME RELATED PARTS (2/5) (UNDER COVER AND SAFETY BAR)
(SERIAL NO. 60501-60650)

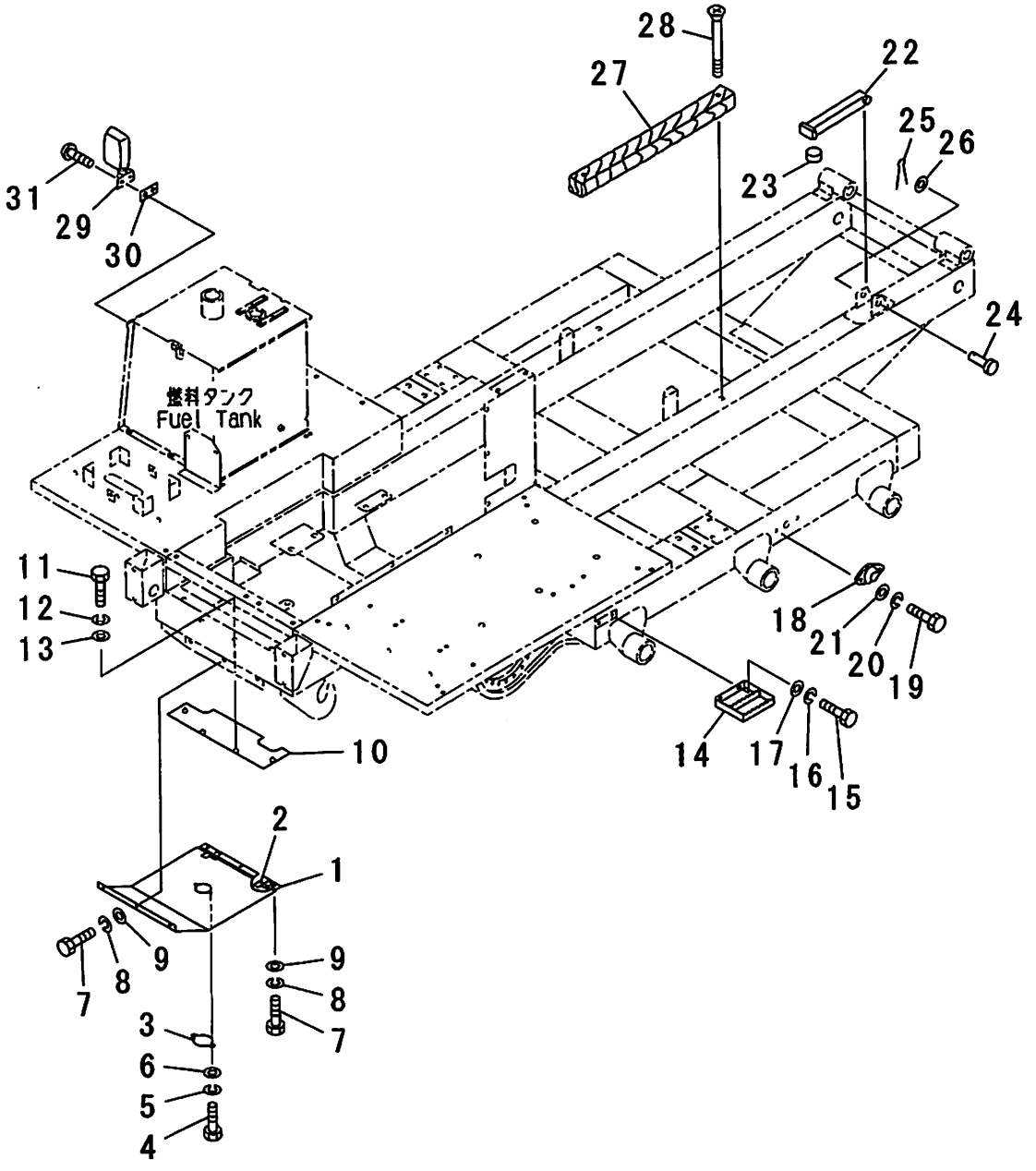

PV93358A

FIG.202

INDEX	PART NO.	DESCRIPTION	Q'TY	SERIAL NO.
1	1-29520-1540	ENGINE UNDER COVER	1	60501 ~ 60650
2	1-41520-1820	·HINGE (WELDED) (B-3-4)	2	60501 ~ 60650
3	1-50520-1550	COVER	1	60501 ~ 60650
4	0-1000-00816	BOLT (M8X16)	2	60501 ~ 60650
5	0-1100-00820	SPRING WASHER (M8)	2	60501 ~ 60650
6	0-1120-00816	PLANE WASHER (M8)	2	60501 ~ 60650
7	0-1000-01025	BOLT (M10X25)	6	60501 ~ 60650
8	0-1100-01025	SPRING WASHER (M10)	6	60501 ~ 60650
9	0-1120-01020	PLANE WASHER (M10)	6	60501 ~ 60650
10	1-50520-3710	PLATE	1	60501 ~ 60650
11	0-1000-01020	BOLT (M10X20)	4	60501 ~ 60650
12	0-1100-01025	SPRING WASHER (M10)	4	60501 ~ 60650
13	0-1120-01020	PLANE WASHER (M10)	4	60501 ~ 60650
14	1-30510-2250	STEP	1	60501 ~ 60650
15	0-1000-01220	BOLT (M12X20)	2	60501 ~ 60650
16	0-1100-01230	SPRING WASHER (M12)	2	60501 ~ 60650
17	0-1120-01225	PLANE WASHER (M12)	2	60501 ~ 60650
18	1-11510-1210	CAP	2	60501 ~ 60650
19	0-1000-00616	BOLT (M6X16)	4	60501 ~ 60650
20	0-1100-00615	SPRING WASHER (M6)	4	60501 ~ 60650
21	0-1120-00616	PLANE WASHER (M6)	4	60501 ~ 60650
22	1-57710-2610	SAFETY BAR	1	60501 ~ 60650
23	1-32710-1650	CUSHON (C-30-CS-2)	1	60501 ~ 60650
24	1-38710-1630	PIN	1	60501 ~ 60650
25	0-3220-03725	COTTER PIN (φ 3.7X25)	1	60501 ~ 60650
26	0-1120-01630	PLANE WASHER (M16)	1	60501 ~ 60650
27	1-29510-1311	CUSHON BLOCK	2	60501 ~ 60650
28	0-1311-01010	SCREW (M10X110)	4	60501 ~ 60650
	1-29520-1200	REAR VIEW MIRROR ASS'Y	1	60501 ~ 60650
29	1-29520-1220	·REAR VIEW MIRROR	1	60501 ~ 60650
30	1-29520-1230	·RUBBER SHEET	1	60501 ~ 60650
31	0-1300-00616	·SCREW (M6X16)	2	60501 ~ 60650

FIG.202A FRAME RELATED PARTS (2/5) (UNDER COVER AND SAFETY BAR)
(SERIAL NO. 60651-)

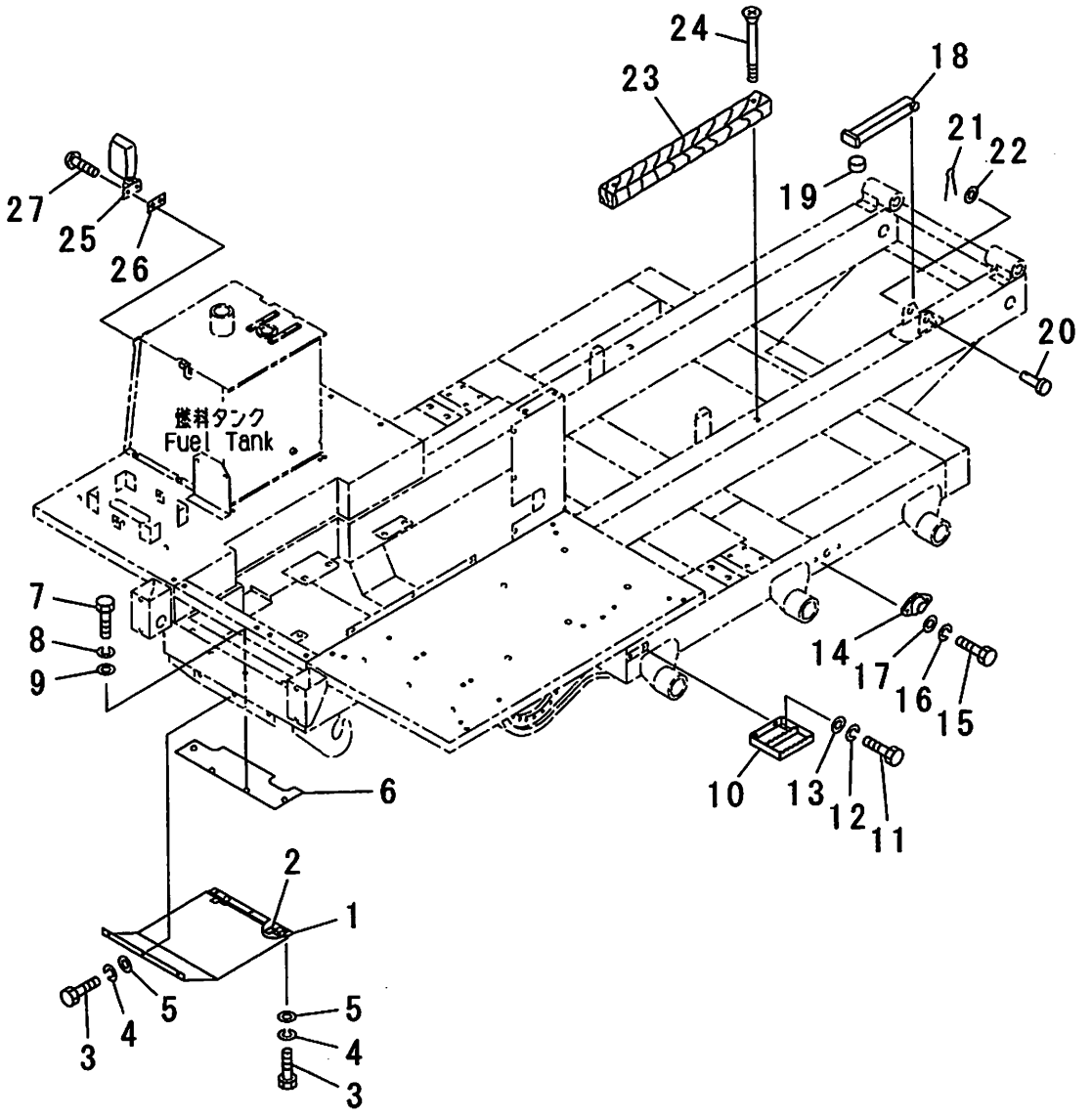

PV93588

FIG.202A

INDEX	PART NO.	DESCRIPTION	Q'TY	SERIAL NO.
1	1-50520-3540	ENGINE UNDER COVER	1	60651 ~
2	1-41520-1820	·HINGE (WELDED) (B-3-4)	2	60651 ~
3	0-1000-01025	BOLT (M10X25)	6	60651 ~
4	0-1100-01025	SPRING WASHER (M10)	6	60651 ~
5	0-1160-01032	PLANE WASHER (M10)	6	60651 ~
6	1-50520-3710	PLATE	1	60651 ~
7	0-1000-01020	BOLT (M10X20)	4	60651 ~
8	0-1100-01025	SPRING WASHER (M10)	4	60651 ~
9	0-1160-01032	PLANE WASHER (M10)	4	60651 ~
10	1-30510-2250	STEP	1	60651 ~
11	0-1000-01220	BOLT (M12X20)	2	60651 ~
12	0-1100-01230	SPRING WASHER (M12)	2	60651 ~
13	0-1120-01225	PLANE WASHER (M12)	2	60651 ~
14	1-11510-1210	CAP	2	60651 ~
15	0-1000-00616	BOLT (M6X16)	4	60651 ~
16	0-1100-00615	SPRING WASHER (M6)	4	60651 ~
17	0-1120-00616	PLANE WASHER (M6)	4	60651 ~
18	1-57710-2610	SAFETY BAR	1	60651 ~
19	1-32710-1650	CUSHON (C-30-CS-2)	1	60651 ~
20	1-38710-1630	PIN	1	60651 ~
21	0-3220-03725	COTTER PIN (φ 3.7X25)	1	60651 ~
22	0-1120-01630	PLANE WASHER (M16)	1	60651 ~
23	1-29510-1311	CUSHON BLOCK	2	60651 ~
24	0-1311-01010	SCREW (M10X110)	4	60651 ~
	1-29520-1200	REAR VIEW MIRROR ASS'Y	1	60651 ~
25	1-29520-1220	·REAR VIEW MIRROR	1	60651 ~
26	1-29520-1230	·RUBBER SHEET	1	60651 ~
27	0-1300-00616	·SCREW (M6X16)	2	60651 ~

FIG.203 FRAME RELATED PARTS (3/5) (ENGINE CONPARTMENT COVER)
(SERIAL NO. 60501-60650)

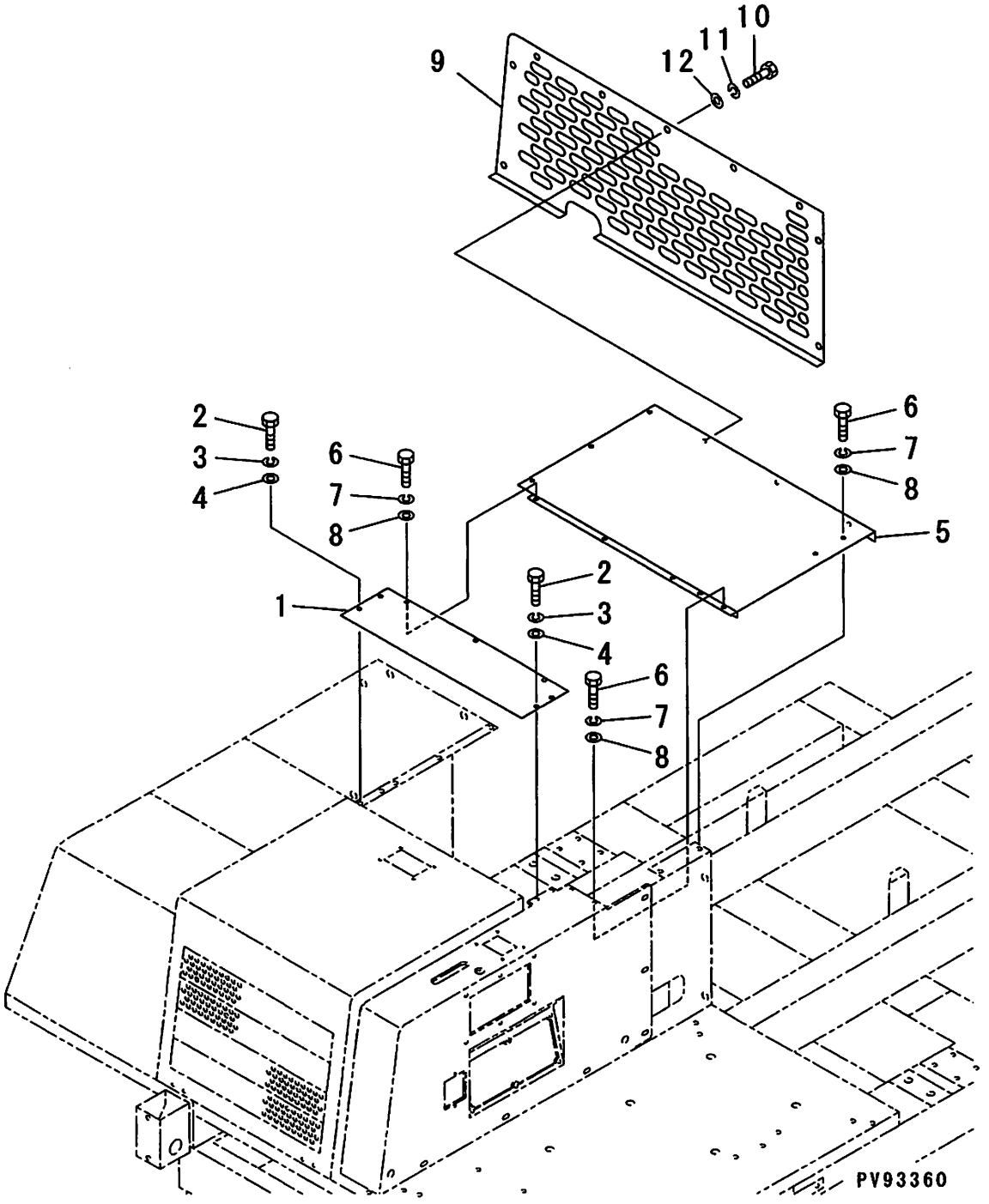

FIG.203

INDEX	PART NO.	DESCRIPTION	Q'TY	SERIAL NO.
1	1-50520-3210	ENGINE TOP FRONT SIDE COVER	1	60501 ~ 60650
2	0-1000-01020	BOLT (M10X20)	4	60501 ~ 60650
3	0-1100-01025	SPRING WASHER (M10)	4	60501 ~ 60650
4	0-1120-01020	PLANE WASHER (M10)	4	60501 ~ 60650
5	1-50520-3220	ENGINE TOP REAR SIDE COVER	1	60501 ~ 60650
6	0-1000-01020	BOLT (M10X20)	10	60501 ~ 60650
7	0-1100-01025	SPRING WASHER (M10)	10	60501 ~ 60650
8	0-1120-01020	PLANE WASHER (M10)	10	60501 ~ 60650
9	1-50520-3230	ENGINE REAR SIDE COVER	1	60501 ~ 60650
10	0-1000-01020	BOLT (M10X20)	9	60501 ~ 60650
11	0-1100-01025	SPRING WASHER (M10)	9	60501 ~ 60650
12	0-1120-01020	PLANE WASHER (M10)	9	60501 ~ 60650

FIG.203A FRAME RELATED PARTS (3/5) (ENGINE CONPARTMENT COVER)
(SERIAL NO. 60651-)

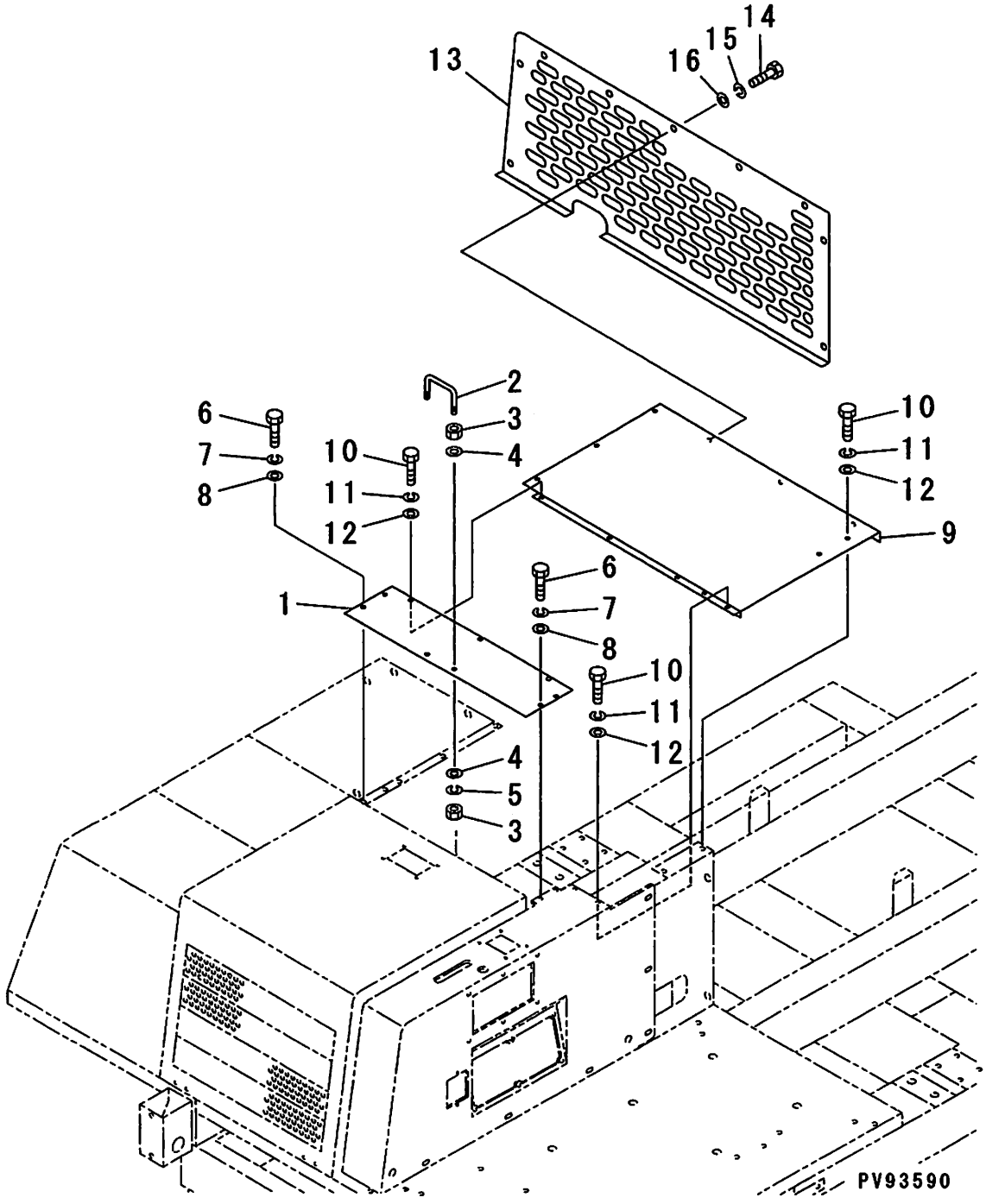

FIG.203A

INDEX	PART NO.	DESCRIPTION	Q'TY	SERIAL NO.
1	1-50520-3211	ENGINE TOP FRONT SIDE COVER	1	60651 ~
2	NKS012-01641	BAR	1	60651 ~
3	0-1200-00806	NUT (M8)	4	60651 ~
4	0-1120-00816	PLANE WASHER (M8)	4	60651 ~
5	0-1100-00820	SPRING WASHER (M8)	2	60651 ~
6	0-1000-01020	BOLT (M10X20)	4	60651 ~
7	0-1100-01025	SPRING WASHER (M10)	4	60651 ~
8	0-1120-01020	PLANE WASHER (M10)	4	60651 ~
9	1-50520-3220	ENGINE TOP REAR SIDE COVER	1	60651 ~
10	0-1000-01020	BOLT (M10X20)	10	60651 ~
11	0-1100-01025	SPRING WASHER (M10)	10	60651 ~
12	0-1120-01020	PLANE WASHER (M10)	10	60651 ~
13	1-50520-3230	ENGINE REAR SIDE COVER	1	60651 ~
14	0-1000-01020	BOLT (M10X20)	9	60651 ~
15	0-1100-01025	SPRING WASHER (M10)	9	60651 ~
16	0-1120-01020	PLANE WASHER (M10)	9	60651 ~

FIG.204 FRAME RELATED PARTS (4/5) (MONITOR PANEL SUPPORT)

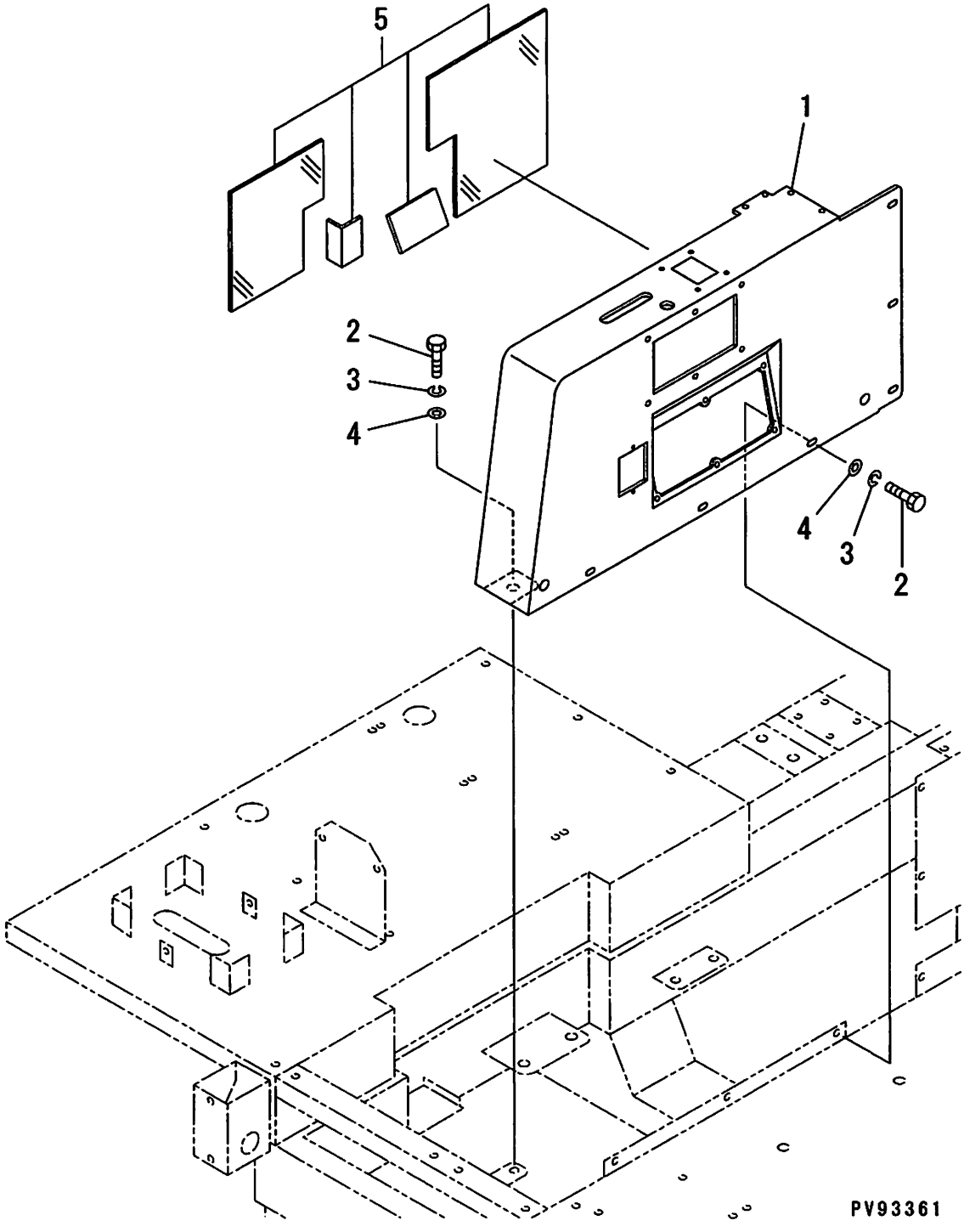

FIG.204

INDEX	PART NO.	DESCRIPTION	Q'TY	SERIAL NO.
1	1-50520-3510	MONITOR PANEL SUPPORT	1	60501 ~
2	0-1000-01025	BOLT (M10X25)	7	60501 ~
3	0-1100-01025	SPRING WASHER (M10)	7	60501 ~
4	0-1120-01020	PLANE WASHER (M10)	7	60501 ~
5	1-50520-3580	INSULATION COVER (CUTTING)	1	60501 ~

FIG.205 FRAME RELATED PARTS (5/5)
(OPERATOR'S SEAT AND FOOT REST)

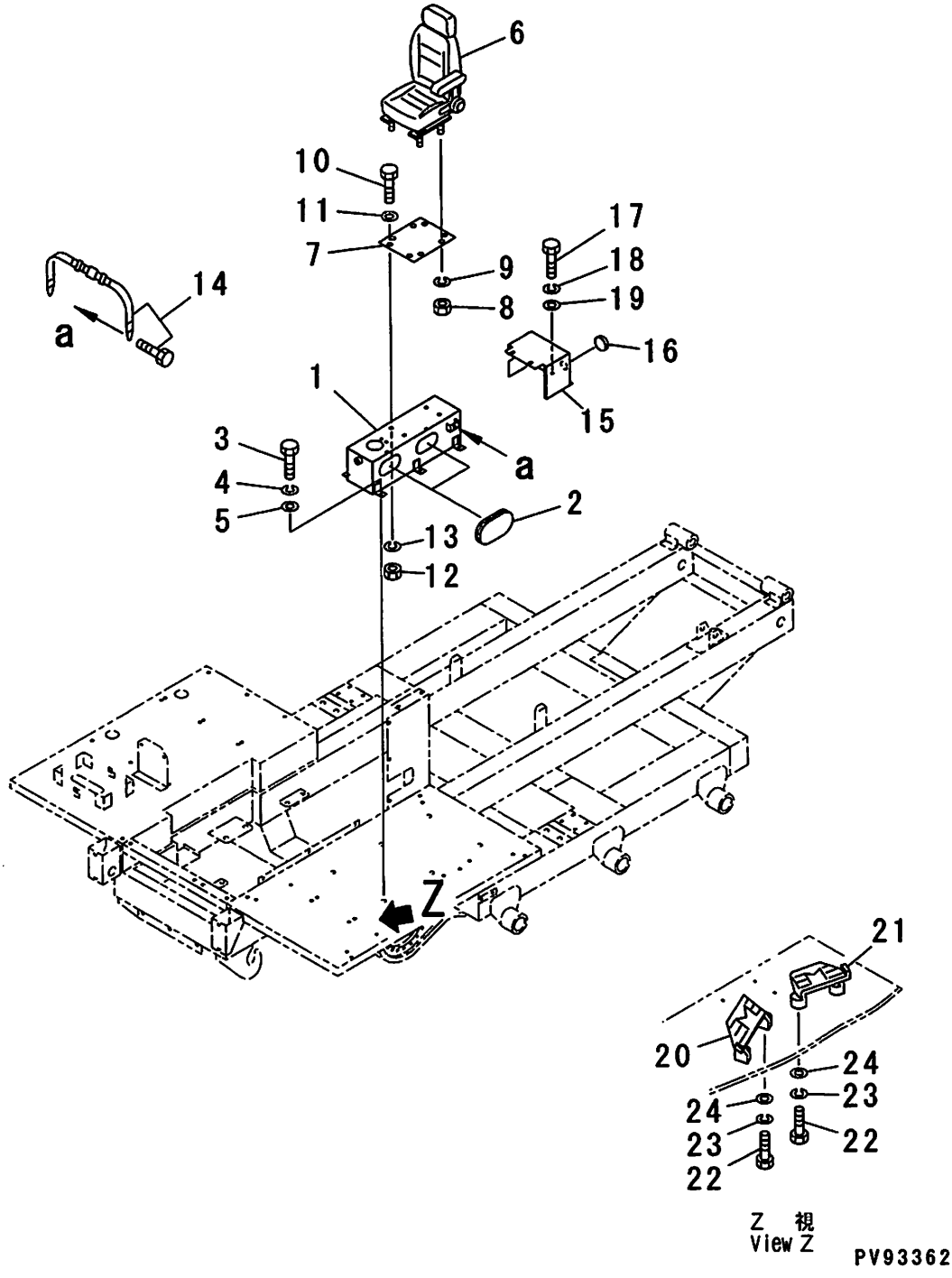

FIG.205

INDEX	PART NO.	DESCRIPTION	Q'TY	SERIAL NO.
1	1-50520-2310	TRAVEL LEVER BOX	1	60501 ~
2	1-12520-1321	RUBBER COVER	2	60501 ~
3	0-1000-00820	BOLT (M8X20)	6	60501 ~
4	0-1100-00820	SPRING WASHER (M8)	6	60501 ~
5	0-1160-00823	PLANE WASHER (M8)	6	60501 ~
6	1-18540-0010	OPERATOR'S SEAT ASS'Y (N99841)	1	60501 ~
7	1-29540-1510	BASE	1	60501 ~
8	0-1200-00806	NUT (M8)	4	60501 ~
9	0-1100-00820	SPRING WASHER (M8)	4	60501 ~
10	0-1000-00820	BOLT (M8X20)	4	60501 ~
11	0-1120-00816	PLANE WASHER (M8)	4	60501 ~
12	0-1200-00806	NUT (M8)	4	60501 ~
13	0-1100-00820	SPRING WASHER (M8)	4	60501 ~
14	1-25540-0020	SEAT BELT ASS'Y (TKS-2N-015)	1	60501 ~
15	1-50520-3320	ROD COVER	1	60501 ~
16	0-2810-04214	GROMMET (SG-36A)	1	60501 ~
17	0-1000-00820	BOLT (M8X20)	2	60501 ~
18	0-1100-00820	SPRING WASHER (M8)	2	60501 ~
19	0-1160-00823	PLANE WASHER (M8)	2	60501 ~
20	1-29540-1620	LEFT SIDE FOOT REST	1	60501 ~
21	1-29540-1610	RIGHT SIDE FOOT REST	1	60501 ~
22	0-1000-01020	BOLT (M10X20)	6	60501 ~
23	0-1100-01025	SPRING WASHER (M10)	6	60501 ~
24	0-1120-01020	PLANE WASHER (M10)	6	60501 ~

FIG.211 CANOPY RELATED PARTS

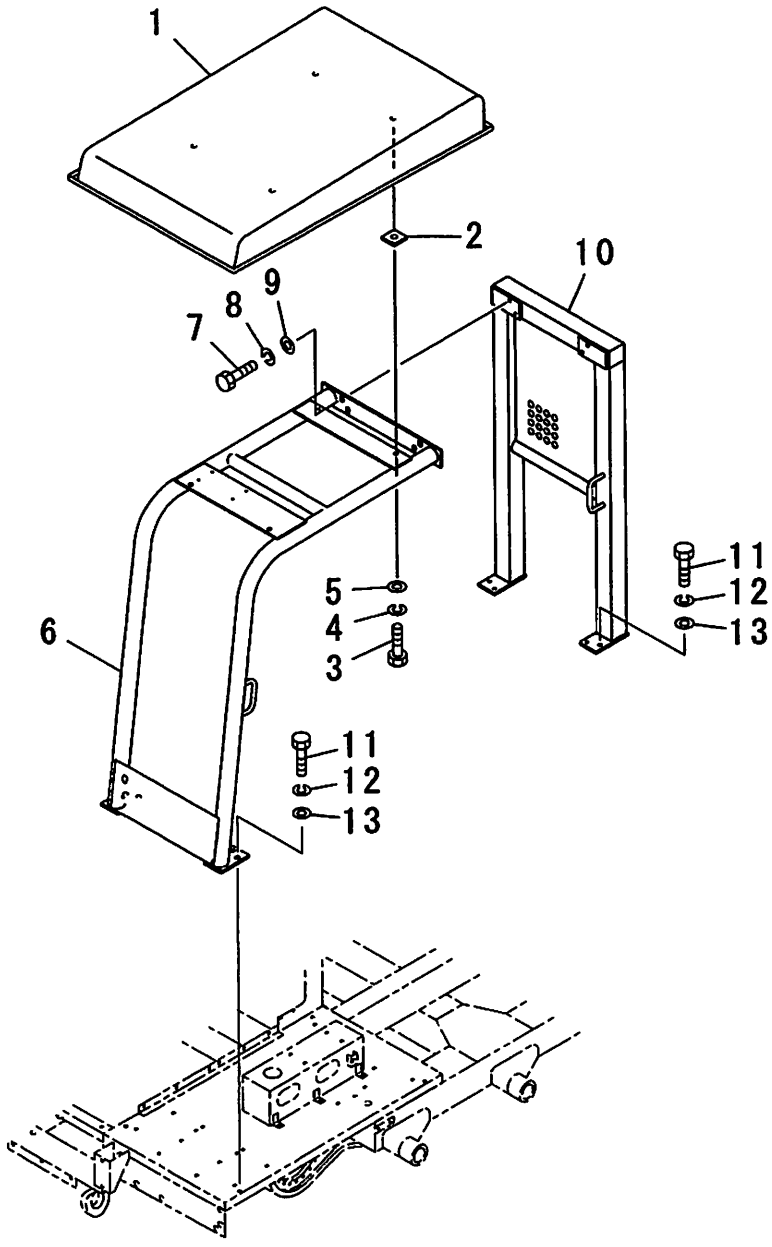

PV93318A

FIG.211

INDEX	PART NO.	DESCRIPTION	Q'TY	SERIAL NO.
1	1-30530-1130	ROOF	1	60501 ~
2	1-30530-1180	PLATE (NKS012-01703)	4	60501 ~
3	0-1000-01025	BOLT (M10X25)	4	60501 ~ 60690
	0-1000-01030	BOLT (M10X30)	4	60691 ~
4	0-1100-01025	SPRING WASHER (M10)	4	60501 ~
5	0-1120-01020	PLANE WASHER (M10)	4	60501 ~
6	1-29530-1120	GATE	1	60501 ~
7	0-1000-01235	BOLT (M12X35)	4	60501 ~
8	0-1100-01230	SPRING WASHER (M12)	4	60501 ~
9	0-1120-01223	PLANE WASHER (M12)	4	60501 ~
10	1-29530-1110	REAR FRAME	1	60501 ~
11	0-1000-01235	BOLT (M12X35)	4	60501 ~
12	0-1100-01230	SPRING WASHER (M12)	4	60501 ~
13	0-1120-01223	PLANE WASHER (M12)	4	60501 ~

FIG.301 UNDER CARRIAGE RELATED PARTS (TRAVEL MOTOR AND IDLER)

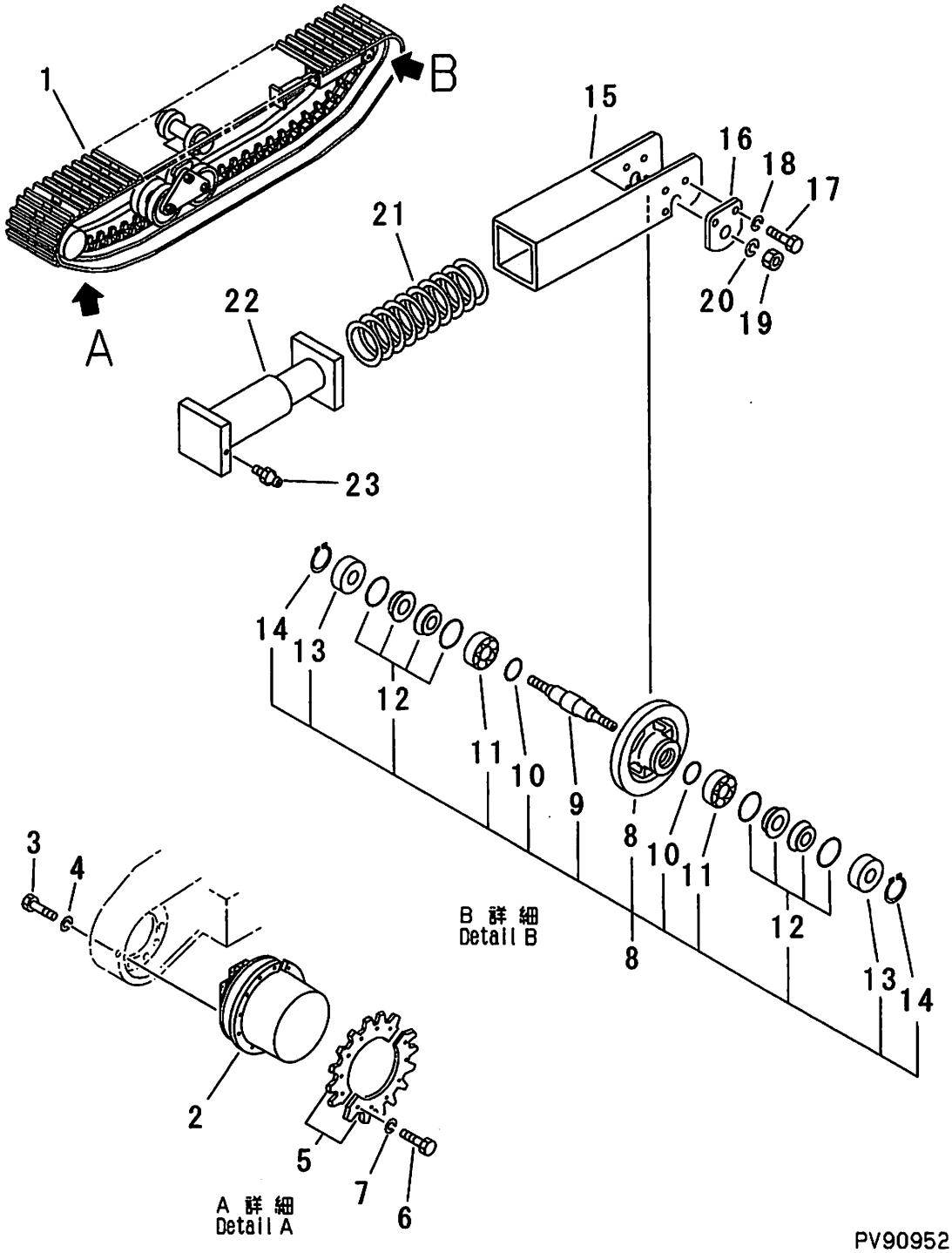

REPAIR GROUPIN	INDEX	PARTS NUMBER	NAME	Q'TY	REF.
B3	1	20940-64436	REDUCTION GEAR	1	
D	-1	20941-63533	HOUSING	1	
D	-2	20941-60172	FLANGE HOLDER	1	
C	-3	20947-82703	ANGULAR BEARING	1	
A2	-4	20946-82707	FLOATING SEAL	1	
A2	-5	20946-82708	SEAL COLLAR	1	
C	-6	20461-30801	PIN	1	
A2	-7	20461-45201	O-RING	1	AS568-267, HS90
C	-8	96321-06350	STEEL BALL	105	JIS B1501 1/4
C	-9	97123-01111	PLUG	2	PT1/8
C	-10	20946-82710	RING NUT	1	
C	-11	20946-82510	PLUG	3	PT3/8
C	-12	20943-60140	HOLDER S/A	1	
C	-1	20941-61058	HOLDER A	1	
C	-2	20941-61648	PLANETARY GEAR "A"	3	
C	-3	20946-93519	NEEDLE BEARING	3	
C	-4	20946-93520	INNER LATHE	3	
C	-5	20946-93521	THRUST WASHER	3	
C	-13	20943-60138	PLANETARY "B" KIT	4	
C	-1	20946-93509	PLANETARY GEAR "B"	1	
C	-2	20941-60425	NEEDLE BEARING	1	
C	-3	20946-93511	FLOATING BUSH	1	
C	-4	20946-93512	THRUST WASHER	1	
C	-14	20941-62354	THRUST PLATE	1	
C	-15	20941-63309	SCREW	4	
C	-16	20941-61358	DRIVE GEAR	1	
C	-17	20946-93515	SUN GEAR	1	
C	-18	20946-93516	SNAP RING	1	
B4	-19	20941-62369	THRUST PLATE	1	
B4	-19	20941-62370	THRUST PLATE	1	
B4	-19	20941-62371	THRUST PLATE	1	
C	-20	93711-60251	SPRING PIN	3	JIS B 2808 6.25L
C	-21	20941-64125	COVER	1	
A2	-22	95123-23000	O-RING	1	JIS B 2401 1B G230
C	-23	20946-82510	PLUG	3	PT3/8
C	-24	20946-93526	WIRE	1	
C	-25	97123-02111	PLUG	1	PT1/4
C	-26	15096-01010	PLUG	2	NPIF 1/16
C	2	20461-40210	SHAFT	1	
C	3	20361-35944	BALL BEARING	1	
A1	4	20631-32108	OIL SEAL	1	TCN30.50.11.A104
C	5	20461-47428	SWASH PLATE	1	
C	6	20461-39202	STEEL BALL	2	15/16
B1	7	20461-41508	CYLINDER BLOCK	1	
C	8	20461-41808	COLLAR	1	
C	9	20461-41324	SPRING	1	
C	10	20461-41809	COLLAR	1	
C	11	94721-48171	SNAP RING	1	JIS B 2804 48HOLE
C	12	20461-40806	PIN	3	
C	13	20461-47704	RETAINER HOLDER	1	
C	14	20461-41105	RETAINER PLATE	1	
B1	15	20462-40108	PISTON ASS'Y	9	
C	16	20461-42310	VALVE PLATE	1	
C	17	20631-25902	BALL BEARING	1	
C	18	20461-30805	PIN	2	
C	19	20361-40844	PIN	2	
D	20	20463-41320	BASE PLATE ASS'Y	1	
D	-1	20461-47927	BASE PLATE	1	
D	-2	21963-40241	PLUNGER ASS'Y	1	
D	(-2-1)	21961-40241	PLUNGER	1	
D	(-2-2)	21961-10802	ORIFICE	2	
C	-3	21321-40801	SPRING SHEET	2	
C	-4	21961-40451	SPRING	2	AS568-920 HS90
C	-5	21961-40702	CAP	2	
A1	-6	21001-00265	O-RING	2	AS568-920 HS90

REPAIR GROUPING	Definition
A	The part which is necessary to replace when you overhaul, supplying as repair kit
B	As of quality and assembly, the part which is supplied as set or kit
C	The part which is supplied as individually
D	The part which is not able to supply

REPAIR GROUPING	INDEX	PARTS NUMBER	NAME	Q'TY	REF.
C	-8	21961-30627	PLUG	2	
D	-9	20461-48301	SPOOL	1	
C	-10	20461-41314	SPRING	1	
C	-11	20461-42401	PLUG	1	
A1	-12	95113-01400	O-RING	2	JIS B 2401 1B P14
C	-13	20461-32419	PLUG	1	
C	-15	15096-01010	PLUG	5	NPTF 1/16
C	-16	21961-40802	ORIFICE	4	M5 0.8L 0.6
C	-19	97124-02111	PLUG	2	PT 1/4
C	-20	20461-30813	PIN	1	
A1	-21	95113-02400	O-RING	2	JIS B 2401 1B P14
A1	-22	95113-01200	O-RING	2	JIS B 2401 1B P12
A1	-23	95712-01200	BACKUP RING	4	JIS B 2407 P12 T2
C	21	20461-49603	FRICTION PLATE	2	
C	22	20461-49506	DISC	3	
C	23	20461-41811	COLLAR	1	
A1	24	20461-75202	O-RING	1	AS568-259, HS90
C	25	20461-49409	BREAK PISTON	1	
A1	26	20461-35209	O-RING	1	AS568-256, HS90
A1	28	20361-45280	O-RING	1	AS568-260, HS90
C	30	20461-41316	SPRING	10	
A1	31	95113-01000	O-RING	3	JIS B 2401 1B P10
A1	32	20531-45277	O-RING	1	
C	33	92703-12300	SOCKETHEAD BOLT	11	JIS B 1176 M12x30L
D	34	20462-40110	PISTON ASS'Y	2	
C	35	20461-41323	SPRING	2	
C	36	20461-42401	PLUG	2	
A1	37	95113-01400	O-RING	2	JIS B 2401 1B P14
B5	38	20463-40904	RELIEF BLOCK S/A	1	
B5	-1	20461-45704	VALVE BODY	1	
B5(C)	-2	21961-40642	PLUG	1	
B5(A1)	-3	21001-00098	O-RING	1	AS568-912 HS90NBR
B5	-4	20531-45803	POPPET	1	
B5(C)	-5	21961-40456	SPRING	1	
B5(C)	-6	21961-40530	SPRING SHEET	1	
B5(A1)	-7	95113-01600	O-RING	1	JIS B 2401 1B P16
B5(A1)	-8	95113-00700	O-RING	1	JIS B 2401 1B P7
B5(C)	-9	92703-08501	SOCKETHEAD BOLT	4	M8x1.25x50L
D	39	99001-02040	SHIPPING PLUG	3	
D	40	91911-01489	DRIVE SCREW	2	1.85 4.8L
D	41	20631-33836	NAME PLATE	1	
C	42	21961-40802	ORIFICE	1	M5 0.8L 0.6
D	43	99001-02020	SHIPPING PLUG	2	PF1/4
D	44	99001-02030	SHIPPING PLUG	1	
A1		2046A-45123	MOTOR SEAL KIT	1	
A2		2094A-65134	REDUCTION GEAR SEAL KIT	1	
B1		2046B-41206	CYLINDER BLOCK KIT	1	
B4		2094B-62315	THRUST PLATE SET	1	

1-12630-0012
MAG-63VP-610-2
PARTS LIST
(・HYD. Motor
・Reduction Gear)
for MST-600VD
60201 & UP

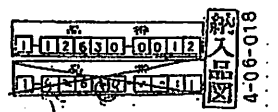

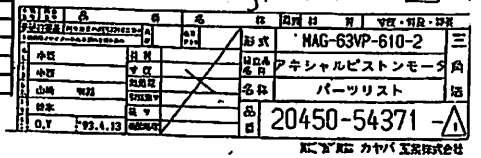

HYD. MOTOR
REDUCTION GEAR

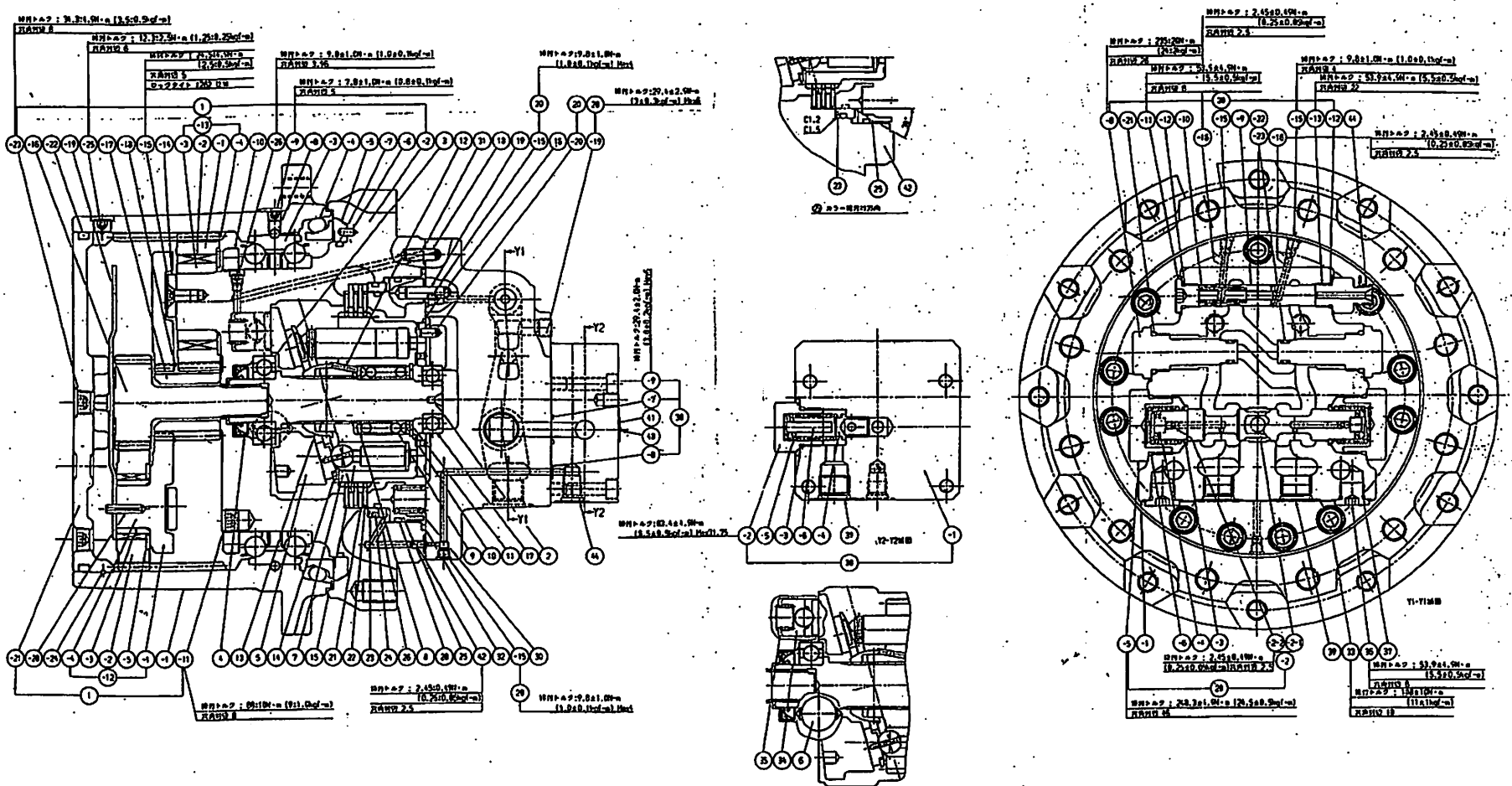

品番	1-12630-0012
品名	1-4-1130-2-1
納入図	4-06-018
形式	MAG-63VP-610-2
名称	アキシャルピストンモータ パーツリスト
品番	20450-54371 -1
7:10	
O.Y	93.4.13

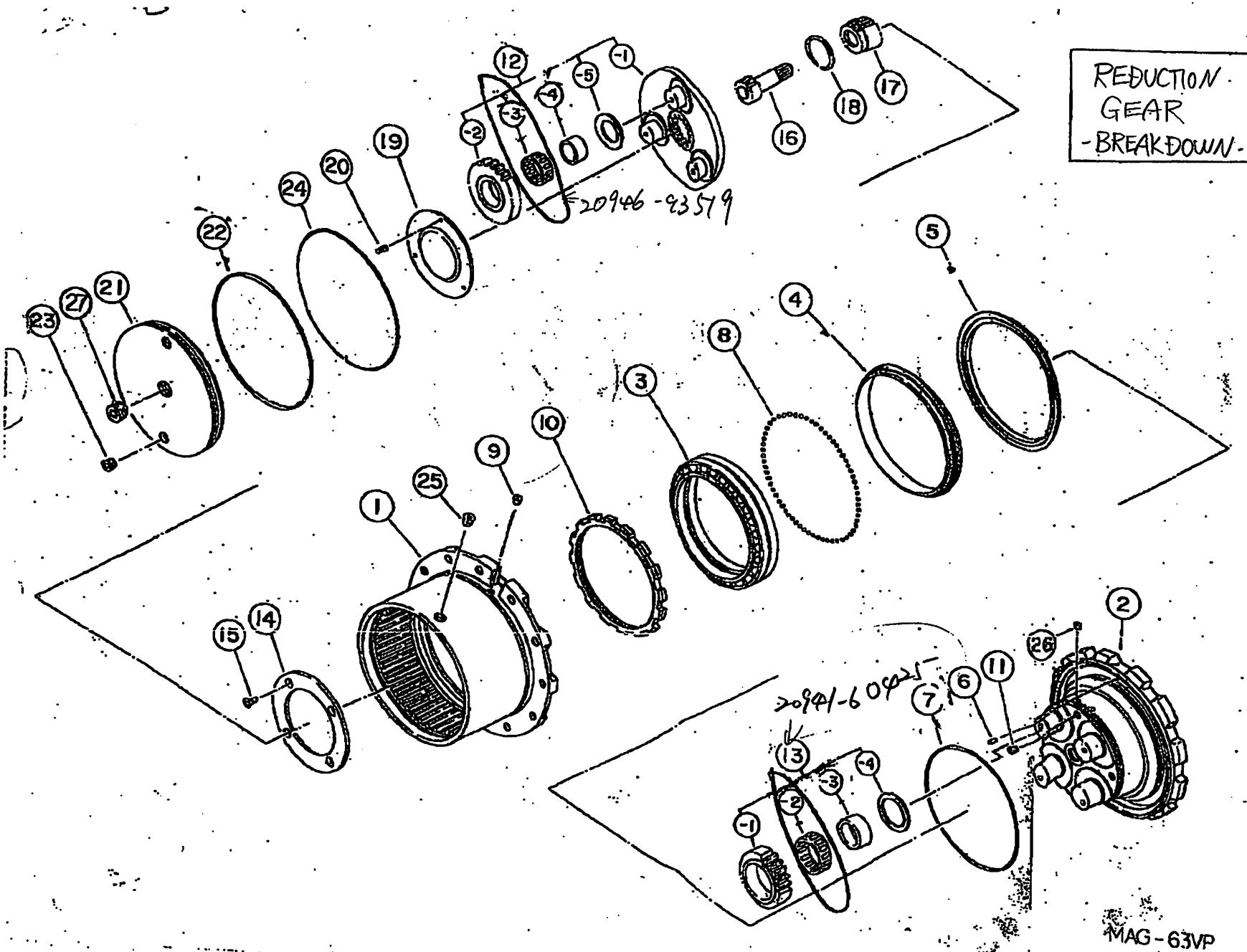
REDUCTION GEAR -BREAKDOWN-
20946-93579
20941-60425
MAG-63VP

FIG.301

INDEX	PART NO.	DESCRIPTION	Q'TY	SERIAL NO.
1	1-50310-1110	TRACK RUBBER	2	60501 ~
2	1-12630-0012	TRAVEL MOTOR ASS'Y (MAG-63VP-610)	2	60501 ~
3	0-1000-31645	BOLT (M16X45)	24	60501 ~
4	0-1100-01640	SPRING WASHER (M16)	24	60501 ~
5	1-12320-2110	SPROCKET	2	60501 ~
6	0-1000-31435	BOLT (M14X35)	24	60501 ~
7	0-1100-31435	SPRING WASHER (M14)	24	60501 ~
	1-12330-0011	IDLER ASS'Y	2	60501 ~
8	1-12330-1111	•IDLER	1	60501 ~
9	1-12330-1120	•SHAFT	1	60501 ~
10	0-2000-03130	•O-RING (G30)	2	60501 ~
11	0-6002-30207	•ROLLER BEARING	2	60501 ~
12	1-11330-0020	•FLOATING SEAL ASS'Y	2	60501 ~
13	1-12330-1150	•CAP	2	60501 ~
14	0-3300-01635	•SNAP RING	2	60501 ~
15	1-12330-1241	SLIDE HOLDER	2	60501 ~
16	1-10330-1160	LOCK PLATE	4	60501 ~
17	0-1000-31220	BOLT (M12X20)	8	60501 ~
18	0-1100-01230	SPRING WASHER (M12)	8	60501 ~
19	0-1200-33024	NUT (M30)	4	60501 ~
20	0-1100-03075	SPRING WASHER (M30)	4	60501 ~
21	1-12330-1210	RECOIL SPRING	2	60501 ~
22	1-12330-1220	CYLINDER	2	60501 ~
23	1-11330-1230	TRACK ADJUSTMENT VALVE	2	60501 ~

FIG.311 UNDER CARRIAGE RELATED PARTS (CARRIER ROLLER)

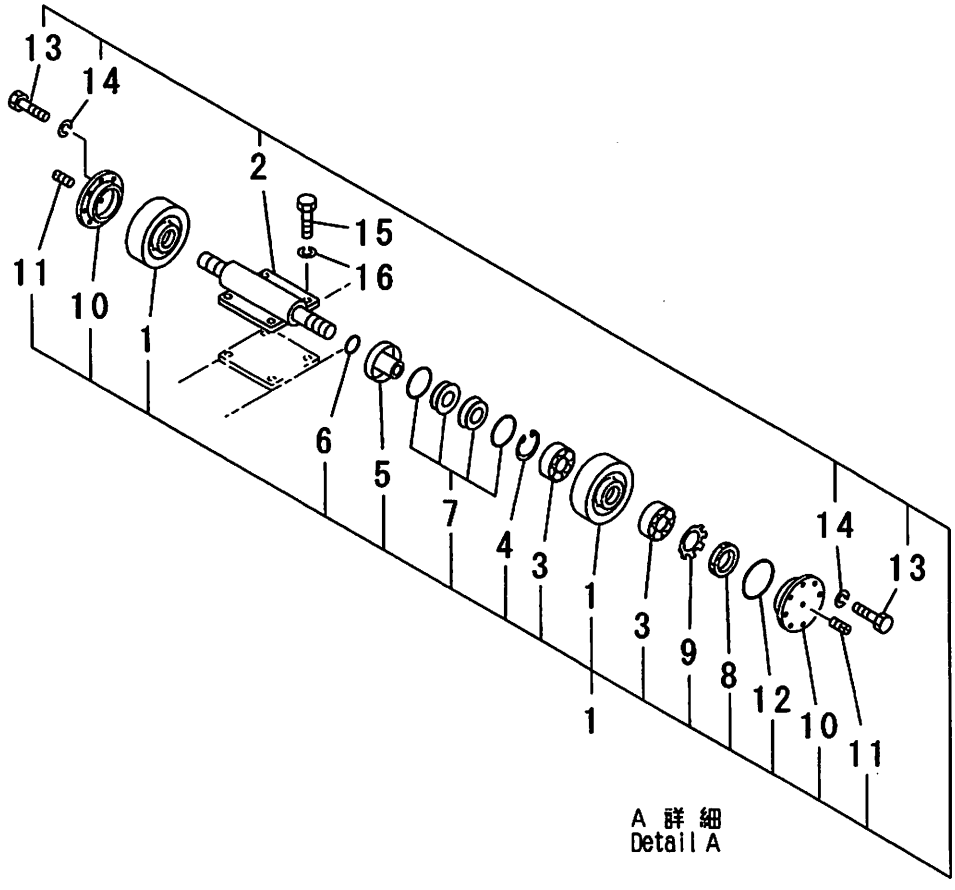

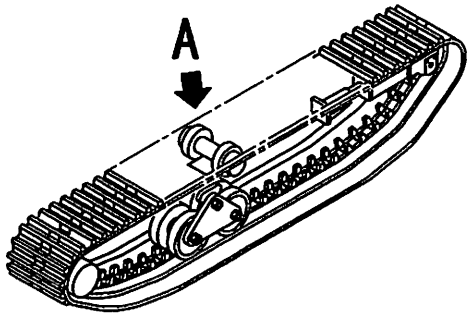

PV90794A

FIG.311

INDEX	PART NO.	DESCRIPTION	Q'TY	SERIAL NO.
	1-12340-0020	CARRIER ROLLER ASS'Y	2	60501 ~
1	1-12340-2110	·CARRIER ROLLER	2	60501 ~
2	1-12340-2120	·SHAFT	1	60501 ~
3	0-6000-06207	·BALL BEARING	4	60501 ~
4	0-3310-02572	·SNAP RING	2	60501 ~
5	1-25340-1130	·CAP	2	60501 ~
6	0-2000-03130	·O-RING (G30)	2	60501 ~
7	1-11330-0020	·FLOATING SEAL ASS'Y	2	60501 ~
8	1-45340-1180	·RING NUT	2	60501 ~
9	1-45350-1190	·LOCK WASHER	2	60501 ~
10	1-12340-1140	·CAP	2	60501 ~
11	0-4010-00200	·PLUG	2	60501 ~
12	0-2000-03170	·O-RING (G70)	2	60501 ~
13	0-1000-00820	·BOLT (M8X20)	16	60501 ~
14	0-1100-00820	·SPRING WASHER (M8)	16	60501 ~
15	0-1000-31225	BOLT (M12X25)	8	60501 ~
16	0-1100-01230	SPRING WASHER (M12)	8	60501 ~

FIG.321 UNDER CARRIAGE RELATED PARTS (TRACK ROLLER)

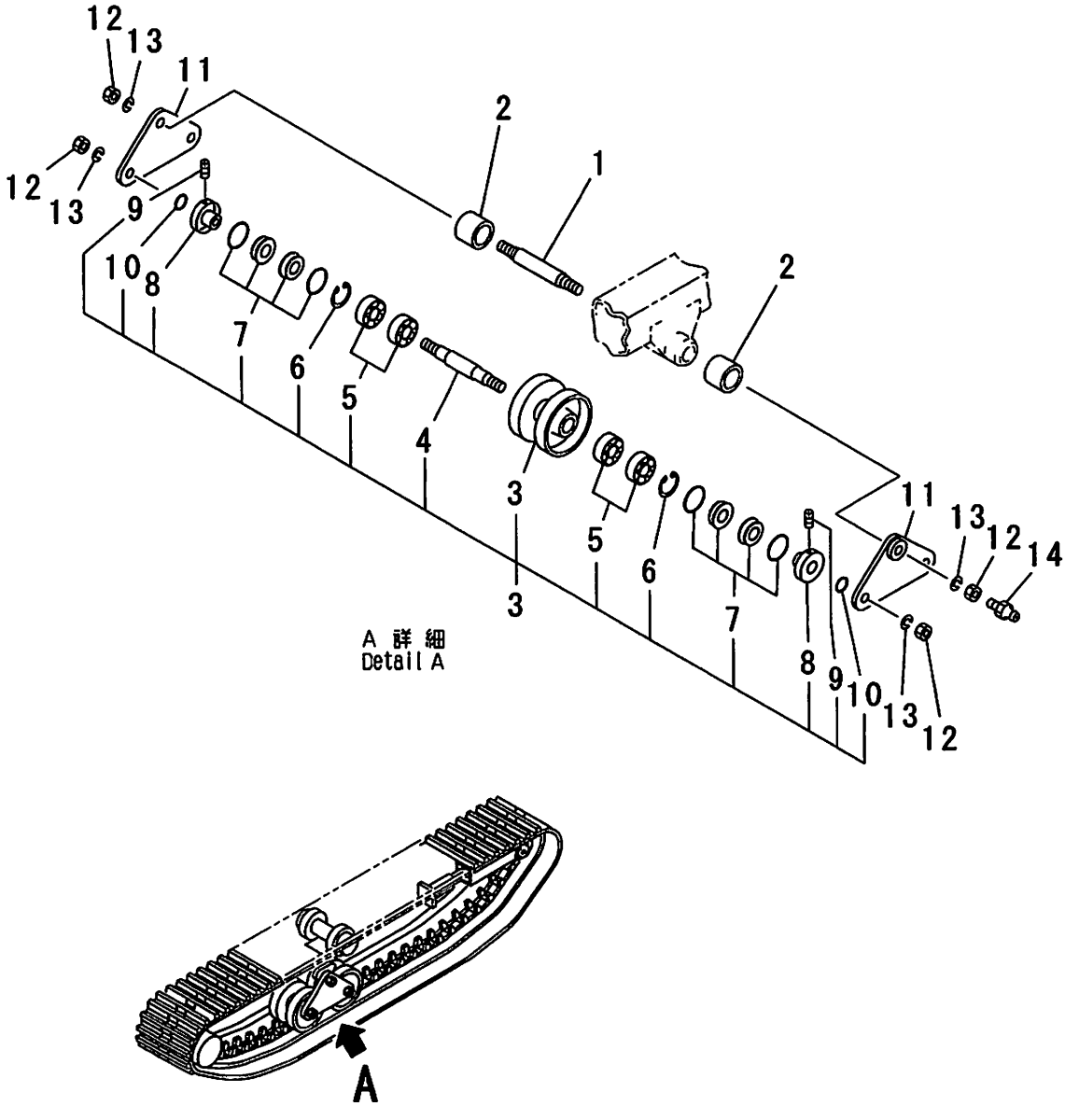

PV93320

FIG.321

INDEX	PART NO.	DESCRIPTION	Q'TY	SERIAL NO.
1	1-16350-1210	PIVOT SHAFT	6	60501 ~
2	1-30350-1210	BUSHING	12	60501 ~
	1-12350-0010	TRACK ROLLER ASS'Y	12	60501 ~
3	1-12350-1110	•TRACK ROLLER	1	60501 ~
4	1-11350-1120	•SHAFT	1	60501 ~
5	0-6000-06009	•BALL BEARING	4	60501 ~
6	0-3310-02575	•SNAP RING	2	60501 ~
7	1-11350-0020	•FLOATING SEAL ASS'Y	2	60501 ~
8	1-11350-1130	•CAP	2	60501 ~
9	0-1350-00830	•SCREW (M8X30)	2	60501 ~
10	0-2000-03145	•O-RING (G45)	2	60501 ~
11	1-50350-1140	PLATE	12	60501 ~ 60650
	1-50350-1141	PLATE	12	60651 ~
12	0-1200-33024	NUT (M30)	36	60501 ~
13	0-1100-03075	SPRING WASHER (M30)	36	60501 ~
14	0-3400-00000	GREASE NIPPLE	12	60501 ~

FIG.401 STEERING CONTROL SYSTEM (1/2) (SERIAL NO. 60501-60650)

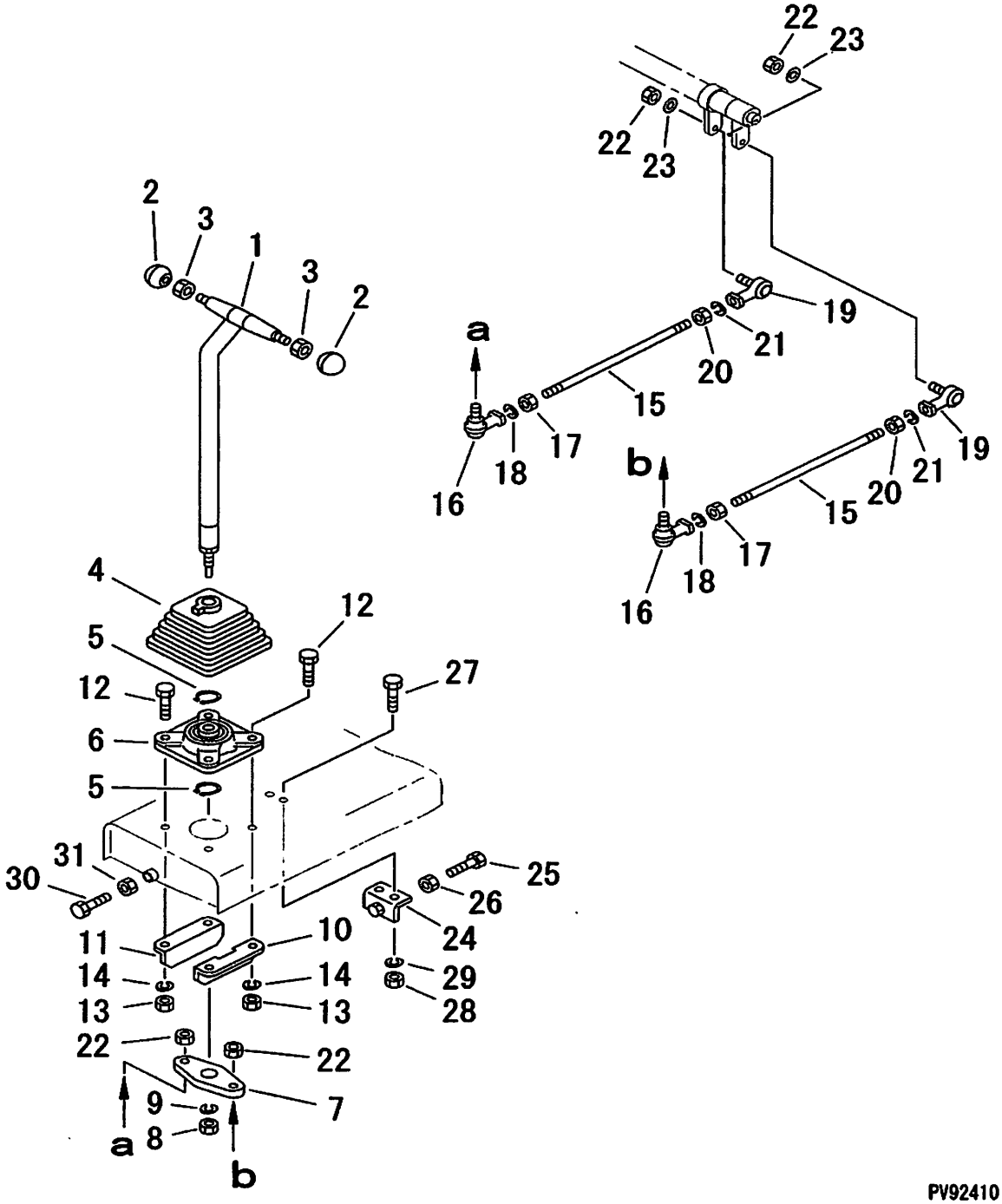

PV92410

FIG.401

INDEX	PART NO.	DESCRIPTION	Q'TY	SERIAL NO.
1	1-12420-1111	CONTROL LEVER	1	60501 ~ 60650
2	1-12420-1120	KNOB	2	60501 ~ 60650
3	0-1220-01006	NUT (M10)	2	60501 ~ 60650
4	1-12420-1131	BOOTS	1	60501 ~ 60650
5	0-3300-01225	SNAP RING	2	60501 ~ 60650
6	0-6110-00205	PILLOW BLOCK (UCF205B0)	1	60501 ~ 60650
7	1-12420-1140	ARM	1	60501 ~ 60650
8	0-1242-02000	U-NUT (M20)	1	60501 ~ 60650
9	0-1100-02051	SPRING WASHER (M20)	1	60501 ~ 60650
10	1-12420-1150	LEFT SIDE BRACKET	1	60501 ~ 60650
11	1-12420-1160	RIGHT SIDE BRACKET	1	60501 ~ 60650
12	0-1000-01035	BOLT (M10X35)	4	60501 ~ 60650
13	0-1200-01008	NUT (M10)	4	60501 ~ 60650
14	0-1100-01025	SPRING WASHER (M10)	4	60501 ~ 60650
15	0-3010-01258	ROD (M12X580)	2	60501 ~ 60650
16	0-3101-11200	ROD END (M12, LEFT THREAD)	2	60501 ~ 60650
17	0-1201-01210	NUT (M12, LEFT THREAD)	2	60501 ~ 60650
18	0-1100-01230	SPRING WASHER (M12)	2	60501 ~ 60650
19	0-3100-11200	ROD END (M12)	2	60501 ~ 60650
20	0-1200-01210	NUT (M12)	2	60501 ~ 60650
21	0-1100-01230	SPRING WASHER (M12)	2	60501 ~ 60650
22	0-1242-01200	U-NUT (M12)	4	60501 ~ 60650
23	0-1120-01223	PLANE WASHER (M12)	2	60501 ~ 60650
24	1-23420-1310	BRACKET	1	60501 ~ 60650
25	0-1000-31060	BOLT (M10X60)	1	60501 ~ 60650
26	0-1200-01008	NUT (M10)	1	60501 ~ 60650
27	0-1000-00820	BOLT (M8X20)	2	60501 ~ 60650
28	0-1200-00806	NUT (M8)	2	60501 ~ 60650
29	0-1100-00820	SPRING WASHER (M8)	2	60501 ~ 60650
30	0-1000-01290	BOLT (M12X90)	1	60501 ~ 60650
31	0-1200-01210	NUT (M12)	1	60501 ~ 60650

FIG.401A STEERING CONTROL SYSTEM (1/2) (SERIAL NO. 60651-)

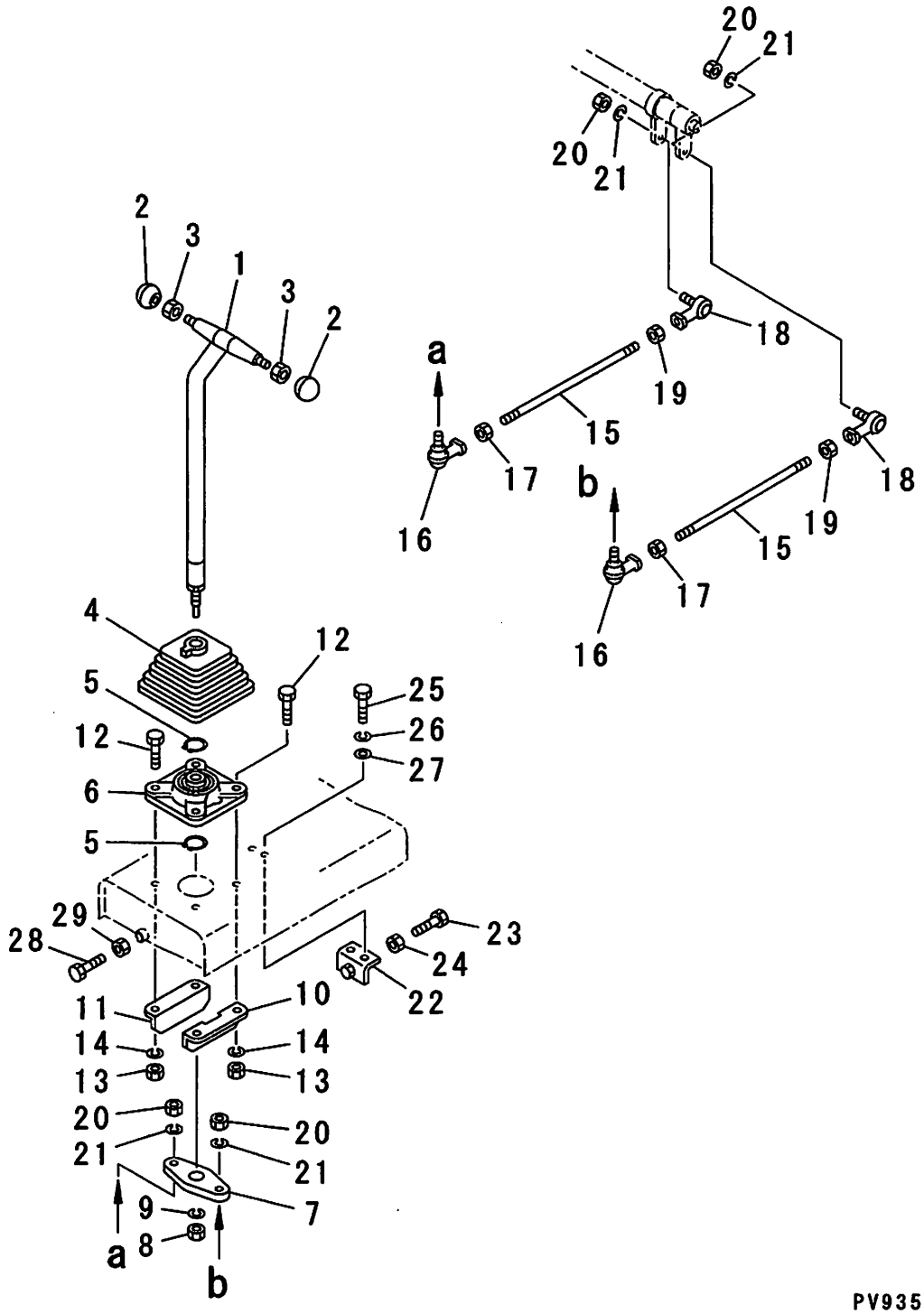

FIG.401A

INDEX	PART NO.	DESCRIPTION	Q'TY	SERIAL NO.
1	1-12420-1111	CONTROL LEVER	1	60651 ~
2	1-12420-1120	KNOB	2	60651 ~
3	0-1220-01006	NUT (M10)	2	60651 ~
4	1-12420-1131	BOOTS	1	60651 ~
5	0-3300-01225	SNAP RING	2	60651 ~
6	0-6110-00205	PILLOW BLOCK (UCF205B0)	1	60651 ~
7	1-12420-1140	ARM	1	60651 ~ 60674
	NKS062-01284	ARM	1	60675 ~
8	0-1200-02016	NUT (M20)	1	60651 ~
9	0-1100-02051	SPRING WASHER (M20)	1	60651 ~
10	1-12420-1150	LEFT SIDE BRACKET	1	60651 ~
11	1-12420-1160	RIGHT SIDE BRACKET	1	60651 ~
12	0-1000-01035	BOLT (M10X35)	4	60651 ~
13	0-1200-01008	NUT (M10)	4	60651 ~
14	0-1100-01025	SPRING WASHER (M10)	4	60651 ~
15	0-3010-01260	ROD (M12X600)	2	60651 ~
16	0-3101-11200	ROD END(M12, LEFT THREAD)	2	60651 ~
17	0-1201-01210	NUT (M12, LEFT THREAD)	2	60651 ~
18	0-3100-11200	ROD END (M12)	2	60651 ~
19	0-1200-01210	NUT (M12)	2	60651 ~
20	0-1200-01210	NUT (M12)	4	60651 ~
21	0-1100-01230	SPRING WASHER (M12)	4	60651 ~
22	1-23420-1310	BRACKET	1	60651 ~
23	0-1000-01260	BOLT (M12X60)	1	60651 ~
24	0-1200-01210	NUT (M12)	1	60651 ~
25	0-1000-00825	BOLT (M8X25)	2	60651 ~
26	0-1100-00820	SPRING WASHER (M8)	2	60651 ~
27	0-1120-00816	PLANE WASHER (M8)	2	60651 ~
28	0-1000-01290	BOLT (M12X90)	1	60651 ~
29	0-1200-01210	NUT (M12)	1	60651 ~

FIG.402 STEERING CONTROL SYSTEM (2/2) (SERIAL NO. 60501-60576)

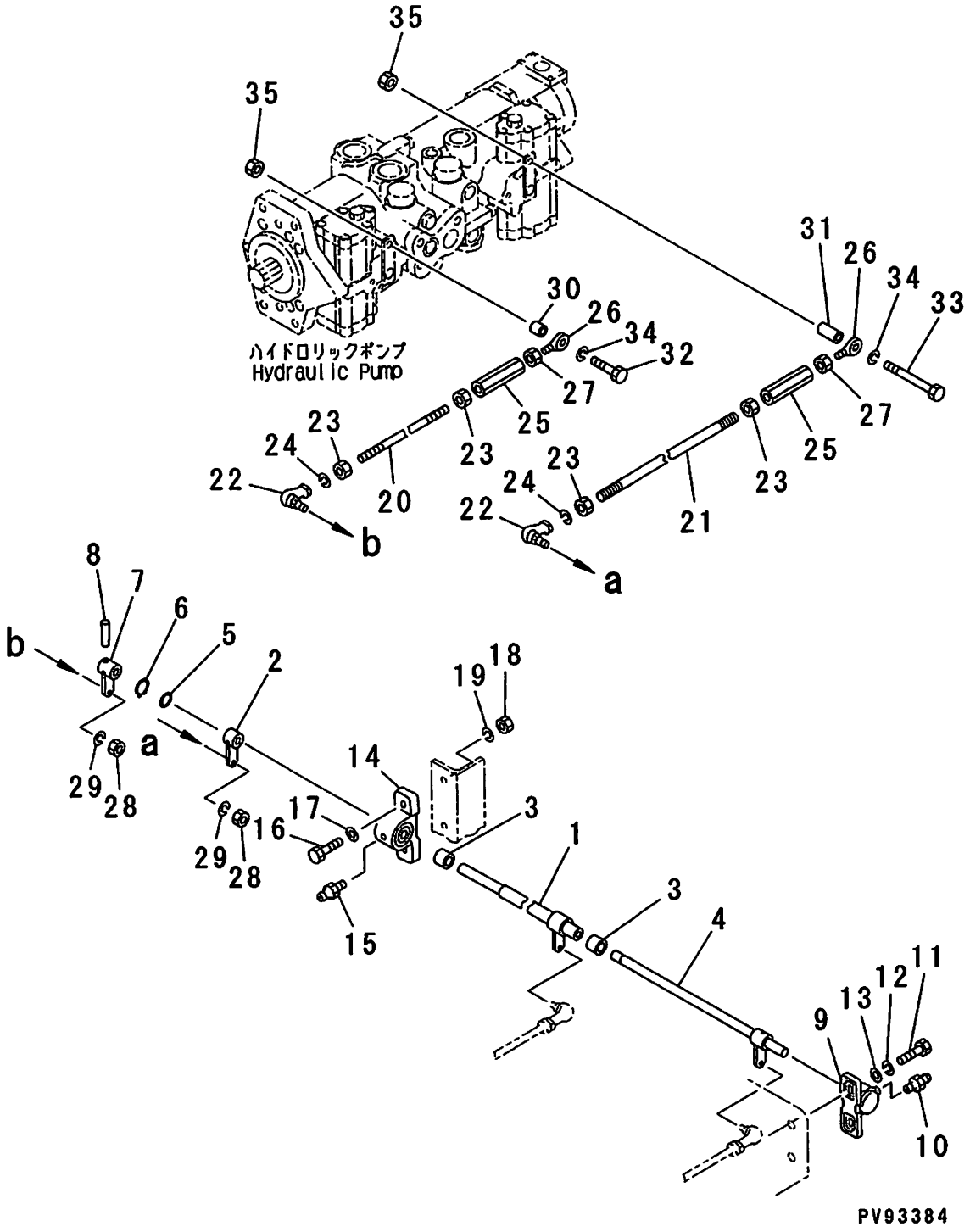

FIG.402

INDEX	PART NO.	DESCRIPTION	Q'TY	SERIAL NO.
1	1-50420-1210	OUTER SHAFT	1	60501 ~ 60576
2	1-12420-1250	·OUTER SHAFT LEVER (WELDED)	1	60501 ~ 60576
3	1-25420-1270	BUSHING	2	60501 ~ 60576
4	1-50420-1220	INNER SHAFT	1	60501 ~ 60576
5	1-12420-1270	WASHER	1	60501 ~ 60576
6	0-3300-01218	SNAP RING	1	60501 ~ 60576
7	1-25420-1290	INNER SHAFT LEVER	1	60501 ~ 60576
8	0-3260-00663	TAPER PIN	1	60501 ~ 60576
9	0-6102-00204	PILLOW BLOCK (UCP204N)	1	60501 ~ 60576
10	1-12420-1280	GREASE NIPPLE	1	60501 ~ 60576
11	0-1000-01035	BOLT (M10X35)	2	60501 ~ 60576
12	0-1100-01025	SPRING WASHER (M10)	2	60501 ~ 60576
13	0-1120-01020	PLANE WASHER (M10)	2	60501 ~ 60576
14	0-6100-00206	PILLOW BLOCK (UCP206)	1	60501 ~ 60576
15	1-25420-1311	GREASE NIPPLE	1	60501 ~ 60576
16	0-1000-01255	BOLT (M12X55)	2	60501 ~ 60576
17	0-1120-01223	PLANE WASHER (M12)	2	60501 ~ 60576
18	0-1200-01210	NUT (M12)	2	60501 ~ 60576
19	0-1100-01230	SPRING WASHER (M12)	2	60501 ~ 60576
20	0-3000-01014	ROD (M10X140)	1	60501 ~ 60576
21	0-3000-01041	ROD (M10X410)	1	60501 ~ 60576
22	0-3100-11000	ROD END (M10)	2	60501 ~ 60576
23	0-1200-01008	NUT (M10)	4	60501 ~ 60576
24	0-1100-01025	SPRING WASHER (M10)	2	60501 ~ 60576
25	0-3130-01060	TURN BACKLE (M10X60)	2	60501 ~ 60576
26	0-3111-11000	ROD END (M10, LEFT THREAD)	2	60501 ~ 60576
27	0-1201-01008	NUT (M10, LEFT THREAD)	2	60501 ~ 60576
28	0-1200-01008	NUT (M10)	2	60501 ~ 60576
29	0-1100-01025	SPRING WASHER (M10)	2	60501 ~ 60576
30	0-3500-01010	COLLAR (Φ 10X10)	1	60501 ~ 60576
31	0-3500-01020	COLLAR (Φ 10X20)	1	60501 ~ 60576
32	0-1000-01040	BOLT (M10X40)	1	60501 ~ 60576
33	0-1000-01050	BOLT (M10X50)	1	60501 ~ 60576
34	0-1100-01025	SPRING WASHER (M10)	2	60501 ~ 60576
35	0-1220-01006	NUT (M10)	2	60501 ~ 60576

FIG.402A STEERING CONTROL SYSTEM (2/2) (SERIAL NO. 60577-60650)

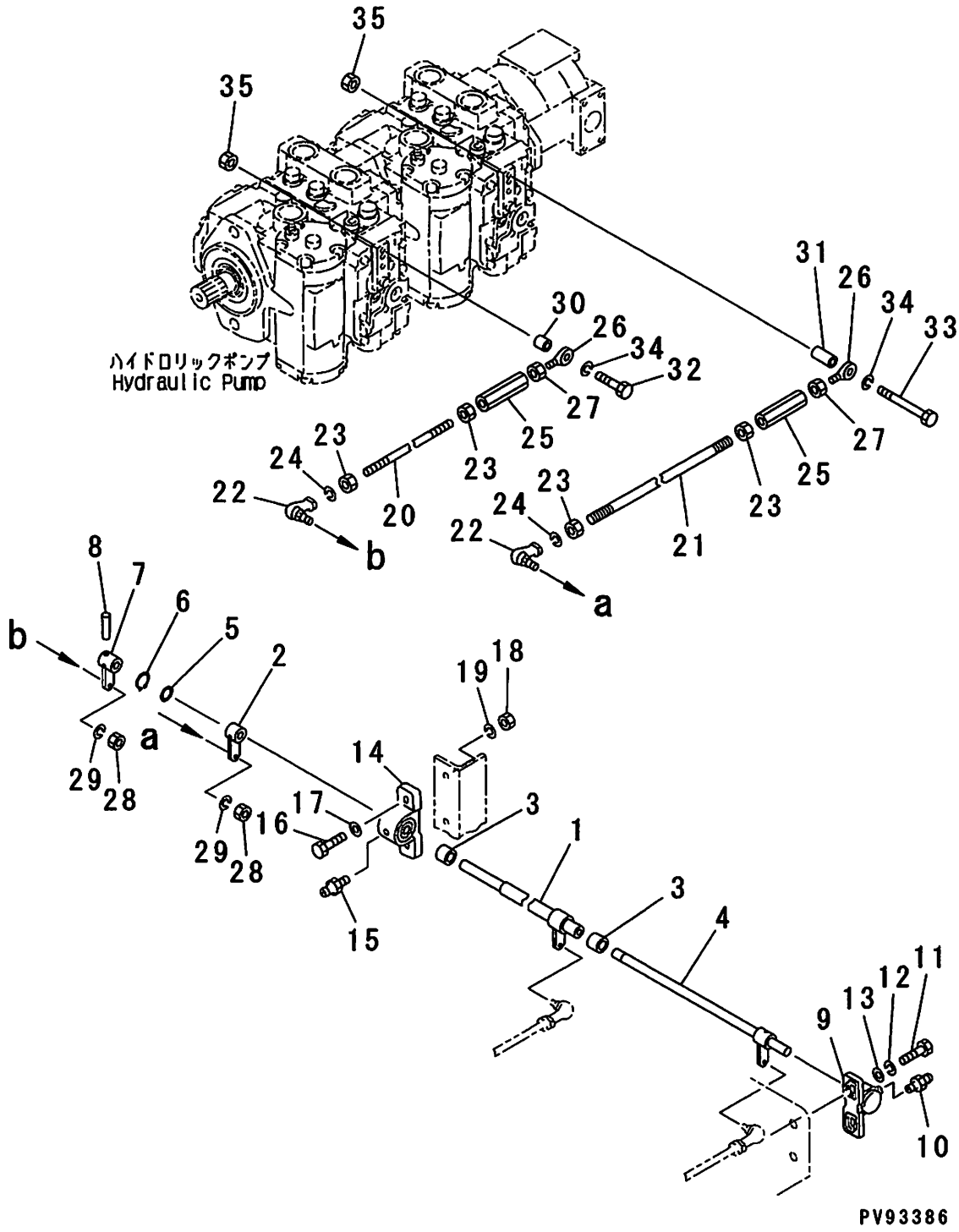

FIG.402A

INDEX	PART NO.	DESCRIPTION	Q'TY	SERIAL NO.
1	1-50420-1210	OUTER SHAFT	1	60577 ~ 60650
2	1-12420-1250	·OUTER SHAFT LEVER (WELDED)	1	60577 ~ 60650
3	1-25420-1270	BUSHING	2	60577 ~ 60650
4	1-50420-1220	INNER SHAFT	1	60577 ~ 60650
5	1-12420-1270	WASHER	1	60577 ~ 60650
6	0-3300-01218	SNAP RING	1	60577 ~ 60650
7	1-25420-1290	INNER SHAFT LEVER	1	60577 ~ 60650
8	0-3260-00663	TAPER PIN	1	60577 ~ 60650
9	0-6102-00204	PILLOW BLOCK (UCP204N)	1	60577 ~ 60650
10	1-12420-1280	GREASE NIPPLE	1	60577 ~ 60650
11	0-1000-01035	BOLT (M10X35)	2	60577 ~ 60650
12	0-1100-01025	SPRING WASHER (M10)	2	60577 ~ 60650
13	0-1120-01020	PLANE WASHER (M10)	2	60577 ~ 60650
14	0-6100-00206	PILLOW BLOCK (UCP206)	1	60577 ~ 60650
15	1-25420-1311	GREASE NIPPLE	1	60577 ~ 60650
16	0-1000-01255	BOLT (M12X55)	2	60577 ~ 60650
17	0-1120-01223	PLANE WASHER (M12)	2	60577 ~ 60650
18	0-1200-01210	NUT (M12)	2	60577 ~ 60650
19	0-1100-01230	SPRING WASHER (M12)	2	60577 ~ 60650
20	0-3000-01017	ROD (M10X170)	1	60577 ~ 60650
21	0-3000-01032	ROD (M10X320)	1	60577 ~ 60650
22	0-3100-11000	ROD END (M10)	2	60577 ~ 60650
23	0-1200-01008	NUT (M10)	4	60577 ~ 60650
24	0-1100-01025	SPRING WASHER (M10)	2	60577 ~ 60650
25	0-3130-01060	TURN BACKLE (M10X60)	2	60577 ~ 60650
26	0-3111-11000	ROD END (M10, LEFT THREAD)	2	60577 ~ 60650
27	0-1201-01008	NUT (M10, LEFT THREAD)	2	60577 ~ 60650
28	0-1200-01008	NUT (M10)	2	60577 ~ 60650
29	0-1100-01025	SPRING WASHER (M10)	2	60577 ~ 60650
30	0-3500-01010	COLLAR (Φ 10X10)	1	60577 ~ 60650
31	0-3500-01020	COLLAR (Φ 10X20)	1	60577 ~ 60650
32	0-1000-01040	BOLT (M10X40)	1	60577 ~ 60650
33	0-1000-01050	BOLT (M10X50)	1	60577 ~ 60650
34	0-1100-01025	SPRING WASHER (M10)	2	60577 ~ 60650
35	0-1220-01006	NUT (M10)	2	60577 ~ 60650

FIG.402B STEERING CONTROL SYSTEM (2/2) (SERIAL NO. 60651-)

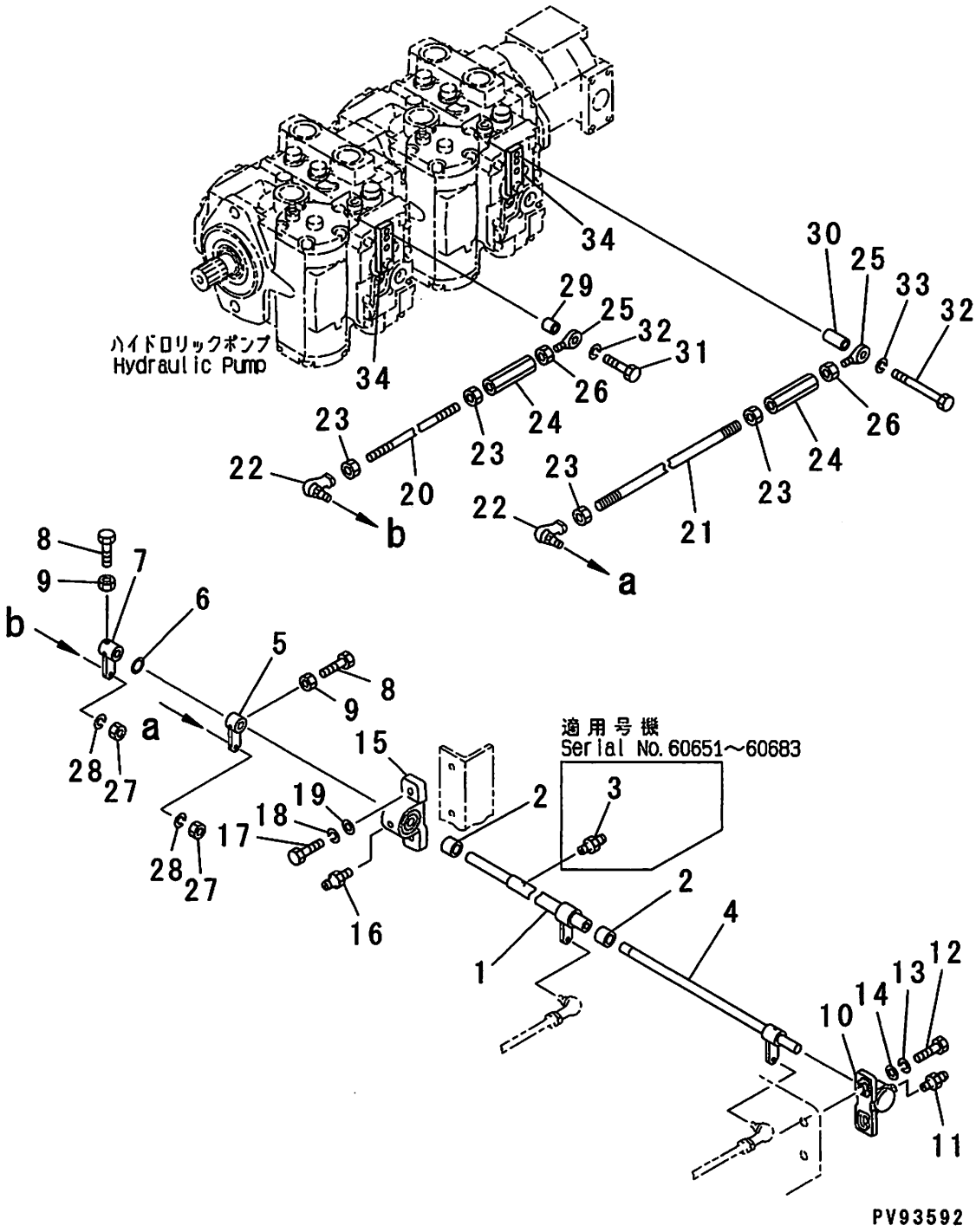

FIG.402B

INDEX	PART NO.	DESCRIPTION	Q'TY	SERIAL NO.
1	NKS062-01200	OUTER SHAFT	1	60651 ~
2	1-25420-1270	•BUSHING	2	60651 ~
3	0-3400-00100	GREASE NIPPLE (A-PT1/8)	1	60651 ~ 60683
4	NKS062-01201	INNER SHAFT	1	60651 ~
5	NKS062-01279	OUTER SHAFT LEVER	1	60651 ~
6	0-1110-02040	WASHER (M20)	1	60651 ~
7	NKS062-01199	INNER SHAFT LEVER	1	60651 ~
8	0-1000-00835	BOLT (M8X35)	2	60651 ~
9	0-1200-00806	NUT (M8)	2	60651 ~
10	0-6102-00204	PILLOW BLOCK (UCP204N)	1	60651 ~
11	1-12420-1280	GREASE NIPPLE	1	60651 ~
12	0-1000-01035	BOLT (M10X35)	2	60651 ~
13	0-1100-01025	SPRING WASHER (M10)	2	60651 ~
14	0-1120-01020	PLANE WASHER (M10)	2	60651 ~
15	0-6100-00206	PILLOW BLOCK (UCP206)	1	60651 ~
16	1-25420-1311	GREASE NIPPLE	1	60651 ~
17	0-1000-01245	BOLT (M12X45)	2	60651 ~
18	0-1100-01230	SPRING WASHER (M12)	2	60651 ~
19	0-1120-01223	PLANE WASHER (M12)	2	60651 ~
20	0-3000-01015	ROD (M10X150)	1	60651 ~
21	0-3000-01033	ROD (M10X330)	1	60651 ~
22	0-3100-11000	ROD END (M10)	2	60651 ~
23	0-1200-01008	NUT (M10)	4	60651 ~
24	0-3130-01060	TURN BACKLE (M10X60)	2	60651 ~
25	0-3111-11000	ROD END (M10, LEFT THREAD)	2	60651 ~
26	0-1201-01008	NUT (M10, LEFT THREAD)	2	60651 ~
27	0-1200-01008	NUT (M10)	2	60651 ~
28	0-1100-01025	SPRING WASHER (M10)	2	60651 ~
29	0-3500-01010	COLLAR (Φ 10X10)	1	60651 ~
30	0-3500-01020	COLLAR (Φ 10X20)	1	60651 ~
31	0-1000-01045	BOLT (M10X45)	1	60651 ~
32	0-1000-01050	BOLT (M10X50)	1	60651 ~
33	0-1100-01025	SPRING WASHER (M10)	2	60651 ~
34	NKS052-01265	LEVER	2	60651 ~

FIG.411 ENGINE CONTROL SYSTEM

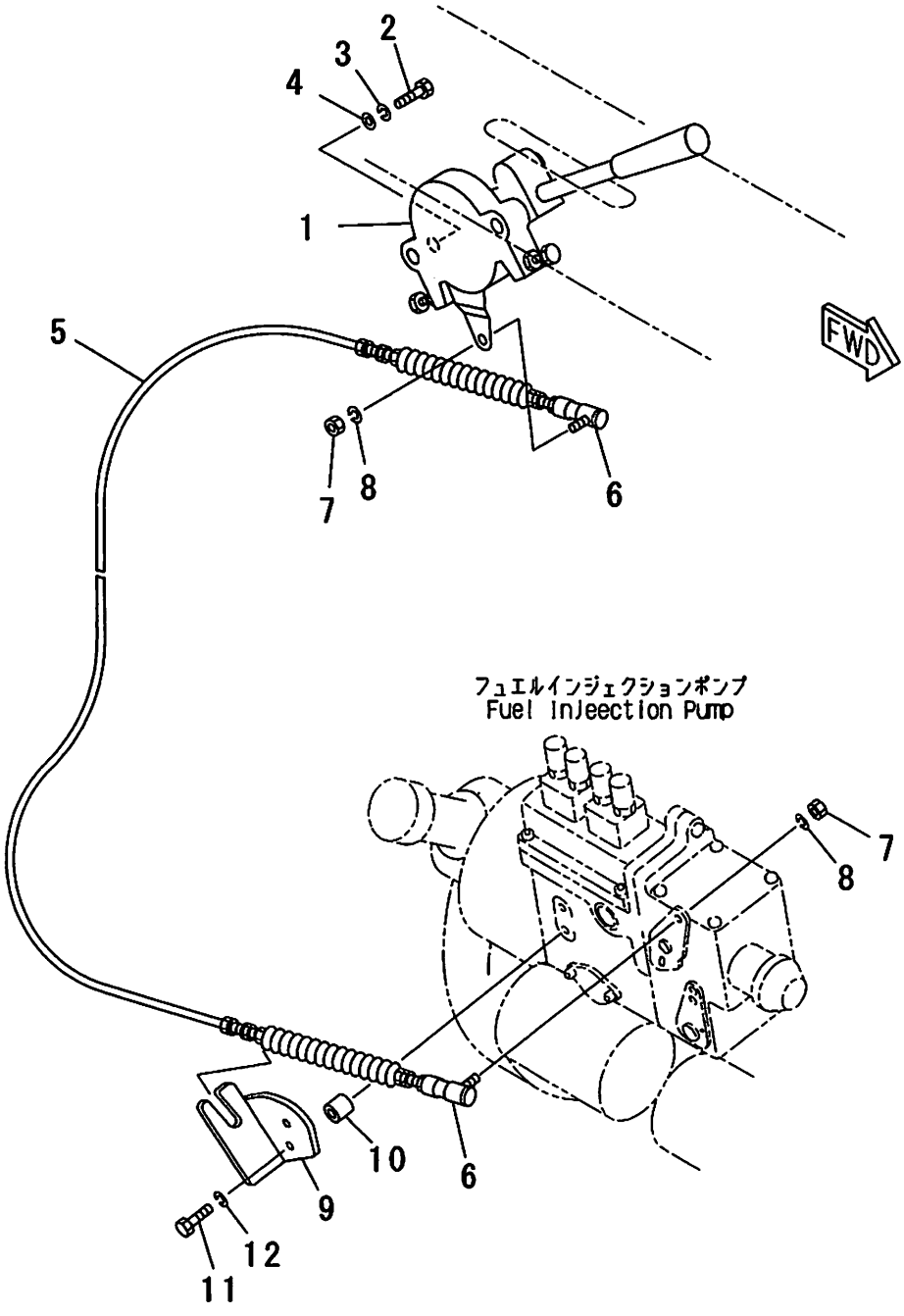

FIG.411

INDEX	PART NO.	DESCRIPTION	Q'TY	SERIAL NO.
1	1-51410-1130	ENGINE CONTROL LEVER ASS'Y (3220-00500)	1	60501 ~
2	0-1000-01025	BOLT (M10X25)	2	60501 ~
3	0-1100-01025	SPRING WASHER (M10)	2	60501 ~
4	0-1120-01020	PLANE WASHER (M10)	2	60501 ~
5	1-16410-1131K	CABLE	1	60501 ~
6	1-11410-1210	JOINT ASS'Y (1500570)	2	60501 ~
7	0-1200-00605	NUT (M6)	2	60501 ~
8	0-1100-00615	SPRING WASHER (M6)	2	60501 ~
9	1-50410-3310	CABLE BRACKET	1	60501 ~
10	1-50410-3320	COLLAR	2	60501 ~
11	0-1000-00835	BOLT (M8X35)	2	60501 ~
12	0-1100-00820	SPRING WASHER (M8)	2	60501 ~

FIG.421 DUMP CONTROL SYSTEM (SERIAL NO. 60501-60650)

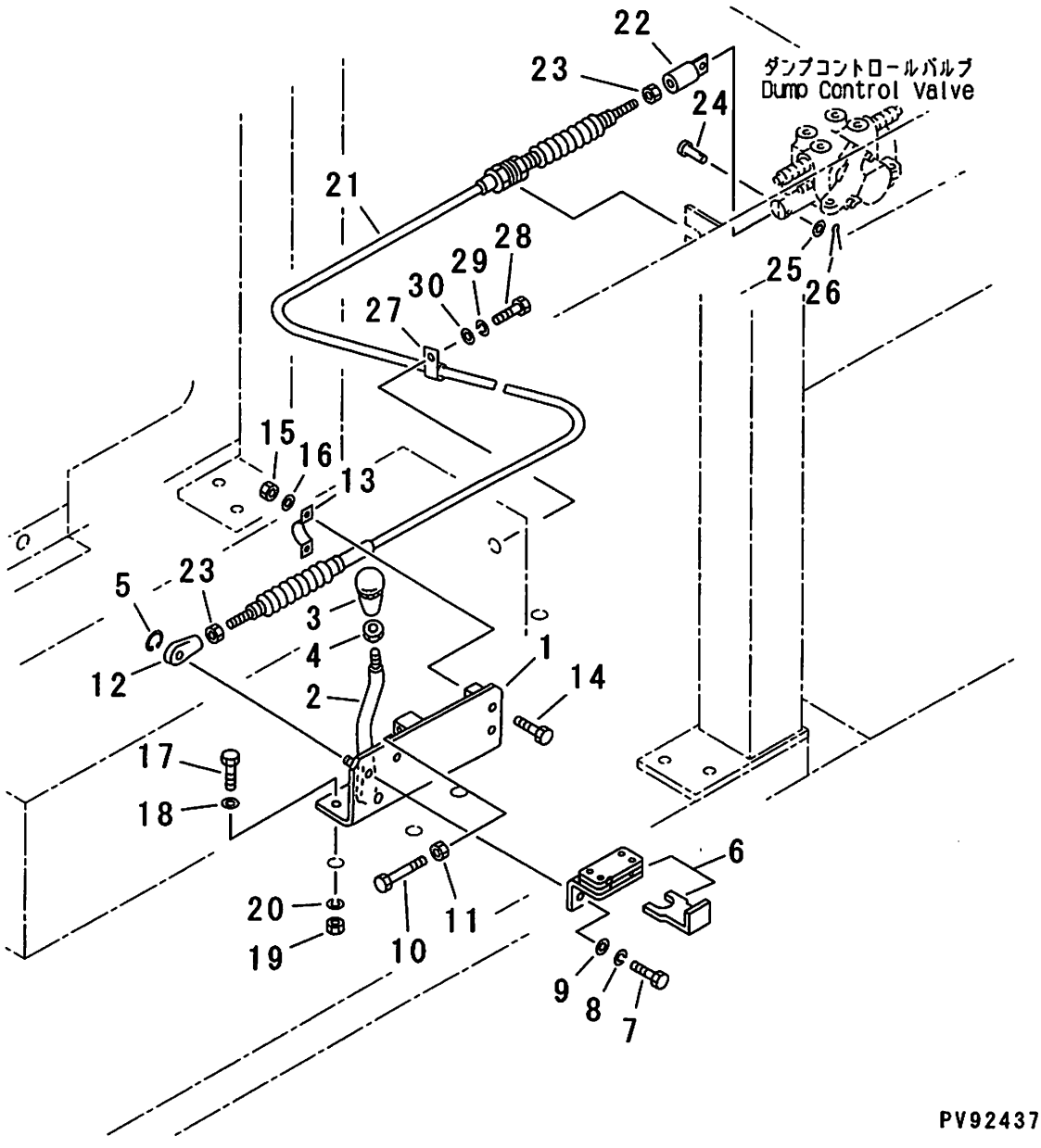

FIG.421

INDEX	PART NO.	DESCRIPTION	Q'TY	SERIAL NO.
	1-31620-0030	DUMP CONTROL LEVER ASS'Y	1	60501 ~ 60650
1	1-31620-1510	·BRACKET ASS'Y	1	60501 ~ 60650
2	1-31620-1520	··LEVER ASS'Y	1	60501 ~ 60650
3	1-31620-1530	·KNOB	1	60501 ~ 60650
4	0-1220-01006	·NUT (M10)	1	60501 ~ 60650
5	1-31620-1540	·E-RING	1	60501 ~ 60650
6	1-31620-1590	·LOCK ASS'Y	1	60501 ~ 60650
7	0-1000-00610	·BOLT (M6X10)	2	60501 ~ 60650
8	0-1100-00615	·SPRING WASHER (M6)	2	60501 ~ 60650
9	0-1120-00616	·PLANE WASHER (M6)	2	60501 ~ 60650
10	0-1000-00630	·BOLT (M6X30)	1	60501 ~ 60650
11	0-1200-00605	·NUT (M6)	1	60501 ~ 60650
12	1-31620-1550	·TERMINAL	1	60501 ~ 60650
13	1-31620-1610	·CLAMP	1	60501 ~ 60650
14	0-1000-00630	·BOLT (M6X30)	2	60501 ~ 60650
15	0-1200-00605	·NUT (M6)	2	60501 ~ 60650
16	0-1120-00616	·PLANE WASHER (M6)	2	60501 ~ 60650
17	0-1000-00825	·BOLT (M8X25)	3	60501 ~ 60650
18	0-1120-00816	·PLANE WASHER (M8)	3	60501 ~ 60650
19	0-1200-00806	NUT (M8)	3	60501 ~ 60650
20	0-1100-00820	SPRING WASHER (M8)	3	60501 ~ 60650
21	1-31410-1190	CABLE (J42BC1900-86)	1	60501 ~ 60650
22	1-36420-1171	JOINT (NF0701-15)	1	60501 ~ 60650
23	0-1220-00805	NUT (M8)	2	60501 ~ 60650
24	1-50620-1710	PIN (Φ 4.25X17)	1	60501 ~ 60650
25	0-1120-00510	PLANE WASHER (M5)	1	60501 ~ 60650
26	0-3220-01018	COTTER PIN (Φ 1.0X18)	1	60501 ~ 60650
27	0-2720-01206	CLIP	2	60501 ~ 60650
28	0-1000-00616	BOLT (M6X16)	2	60501 ~ 60650
29	0-1100-00615	SPRING WASHER (M6)	2	60501 ~ 60650
30	0-1120-00616	PLANE WASHER (M6)	2	60501 ~ 60650

FIG.421A DUMP CONTROL SYSTEM (SERIAL NO. 60651-)

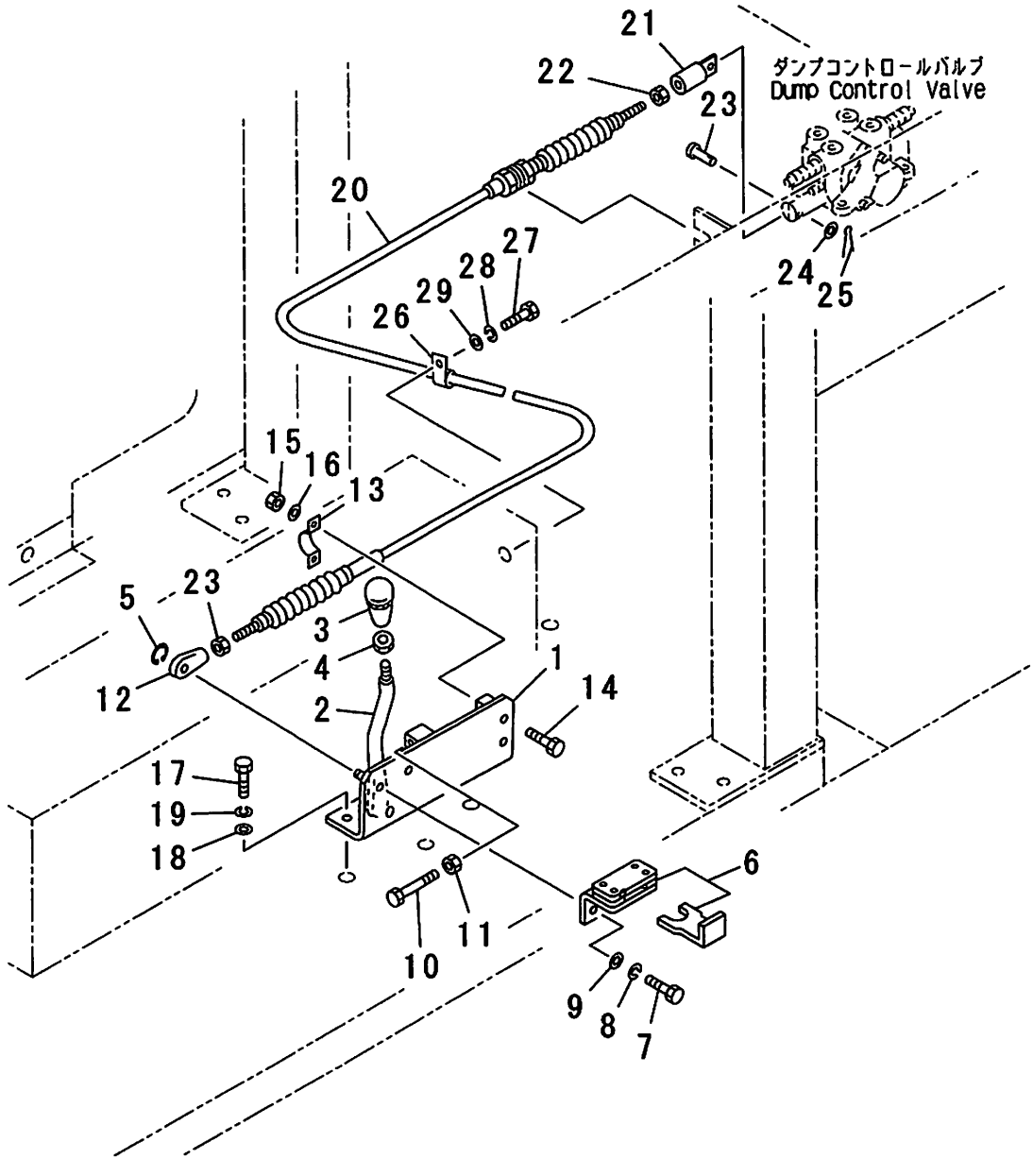

FIG.421A

INDEX	PART NO.	DESCRIPTION	Q'TY	SERIAL NO.
	1-31620-0030	DUMP CONTROL LEVER ASS'Y	1	60651 ~
1	1-31620-1510	·BRACKET ASS'Y	1	60651 ~
2	1-31620-1520	··LEVER ASS'Y	1	60651 ~
3	1-31620-1530	·KNOB	1	60651 ~
4	0-1220-01006	·NUT (M10)	1	60651 ~
5	1-31620-1540	·E-RING	1	60651 ~
6	1-31620-1590	·LOCK ASS'Y	1	60651 ~
7	0-1000-00610	·BOLT (M6X10)	2	60651 ~
8	0-1100-00615	·SPRING WASHER (M6)	2	60651 ~
9	0-1120-00616	·PLANE WASHER (M6)	2	60651 ~
10	0-1000-00630	·BOLT (M6X30)	1	60651 ~
11	0-1200-00605	·NUT (M6)	1	60651 ~
12	1-31620-1550	·TERMINAL	1	60651 ~
13	1-31620-1610	·CLAMP	1	60651 ~
14	0-1000-00630	·BOLT (M6X30)	2	60651 ~
15	0-1200-00605	·NUT (M6)	2	60651 ~
16	0-1120-00616	·PLANE WASHER (M6)	2	60651 ~
17	0-1000-00825	·BOLT (M8X25)	3	60651 ~
18	0-1120-00816	·PLANE WASHER (M8)	3	60651 ~
19	0-1100-00820	SPRING WASHER (M8)	3	60651 ~
20	1-31410-1190	CABLE (J42BC1900-86)	1	60651 ~
21	1-36420-1171	JOINT (NF0701-15)	1	60651 ~
22	0-1220-00805	NUT (M8)	2	60651 ~
23	1-50620-1710	PIN (Φ 4.25X17)	1	60651 ~
24	0-1120-00510	PLANE WASHER (M5)	1	60651 ~
25	0-3220-01018	COTTER PIN (Φ 1.0X18)	1	60651 ~
26	0-2720-01206	CLIP	2	60651 ~
27	0-1000-00616	BOLT (M6X16)	2	60651 ~
28	0-1100-00615	SPRING WASHER (M6)	2	60651 ~
29	0-1120-00616	PLANE WASHER (M6)	2	60651 ~

FIG.501 HYDRAULIC PIPING (CONTROL VALVE AND DUMP CYLINDER LINE)
(SERIAL NO. 60501-60576)

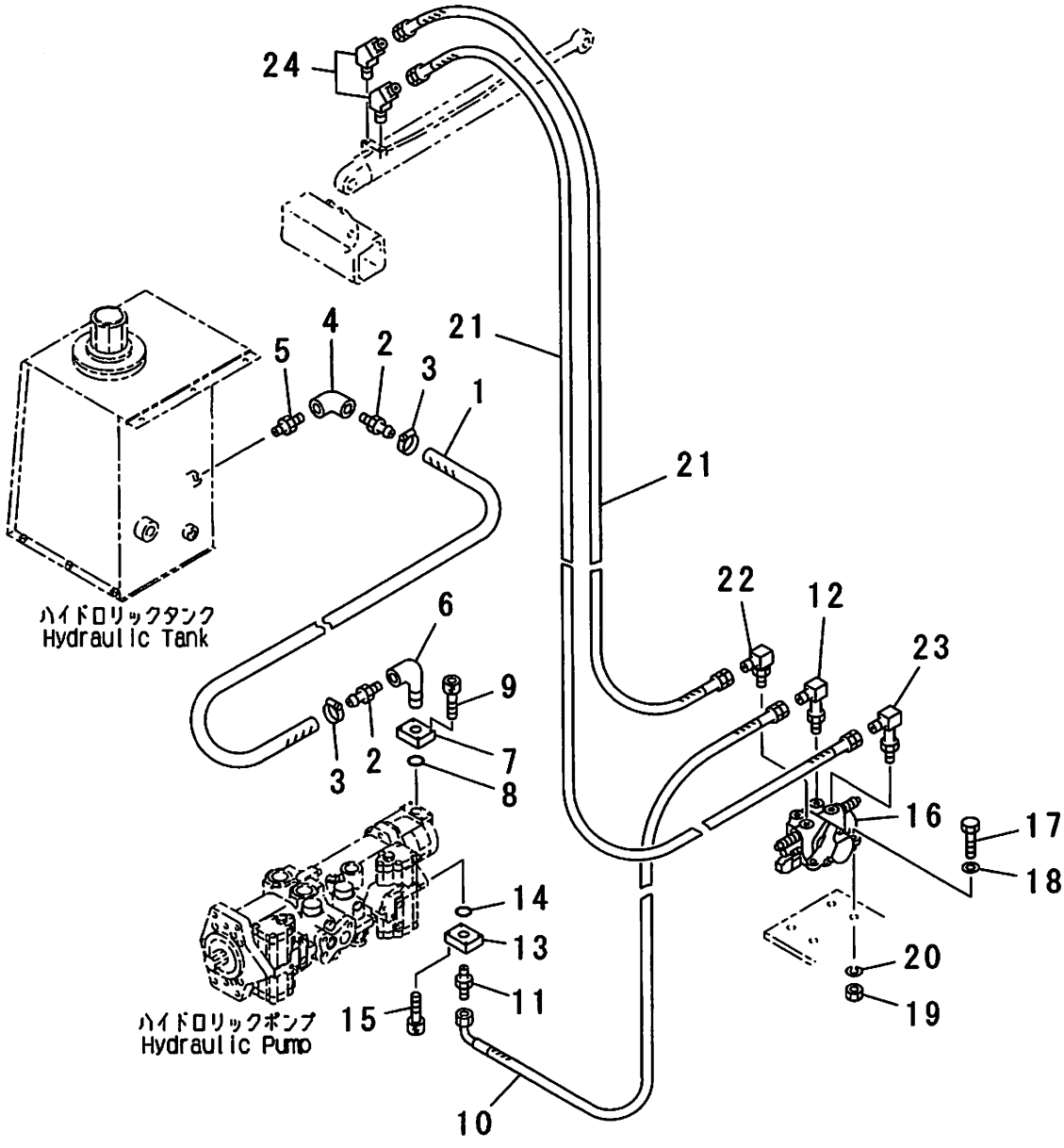

PV93388

FIG.501

INDEX	PART NO.	DESCRIPTION	Q'TY	SERIAL NO.
1	0-2100-01487	HOSE (1·1/2"X870)	1	60501 ~ 60576
2	0-4220-01414	NIPPLE (PT1·1/2XSLEEVE)	2	60501 ~ 60576
3	0-2700-10044	CLAMP (ABA32-44)	2	60501 ~ 60576
4	0-4360-01414	ELBOW (PT1·1/2XPT1·1/2)	1	60501 ~ 60576
5	0-4212-01414	NIPPLE (PT1·1/2XPT1·1/2)	1	60501 ~ 60576
6	0-4380-01410	ELBOW (PT1·1/2XPT1)	1	60501 ~ 60576
7	1-12670-1410	FLANGE	1	60501 ~ 60576
8	0-2000-03135	O-RING (G35)	1	60501 ~ 60576
9	0-1020-31025	SOCKET HEAD BOLT (M10X25)	4	60501 ~ 60576
10	0-2410-00483	HOSE (1/2"X830)	1	60501 ~ 60576
11	0-4210-00404	NIPPLE (PT1/2XPF1/2)	1	60501 ~ 60576
12	0-4326-01404	ELBOW (UNF7/8XPF1/2)	1	60501 ~ 60576
	0-2040-02520	·O-RING (910)	1	60501 ~ 60576
13	1-23670-1420	FLANGE	1	60501 ~ 60576
14	0-2000-03130	O-RING (G30)	1	60501 ~ 60576
15	0-1020-30825	SOCKET HEAD BOLT (M8X25)	4	60501 ~ 60576
16	1-18620-0013	CONTROL VALVE ASS'Y (KAYABA: KVS65)	1	60501 ~ 60576
17	0-1000-00835	BOLT (M8X35)	3	60501 ~ 60576
18	0-1120-00816	PLANE WASHER (M8)	3	60501 ~ 60576
19	0-1200-00806	NUT (M8)	3	60501 ~ 60576
20	0-1100-00820	SPRING WASHER (M8)	3	60501 ~ 60576
21	0-2210-00375	HOSE (3/8"X750)	2	60501 ~ 60576
22	0-4326-01203	ELBOW (UNF3/4XPF3/8)	1	60501 ~ 60576
	0-2040-02217	·O-RING (908)	1	60501 ~ 60576
23	0-4321-01203	ELBOW (UNF3/4XPF3/8)	1	60501 ~ 60576
	0-2040-02217	·O-RING (908)	1	60501 ~ 60576
24	0-4310-00303	ELBOW (PT3/8XPF3/8)	2	60501 ~ 60576

FIG.501A HYDRAULIC PIPING (CONTROL VALVE AND DUMP CYLINDER LINE)
(SERIAL NO. 60577-60650)

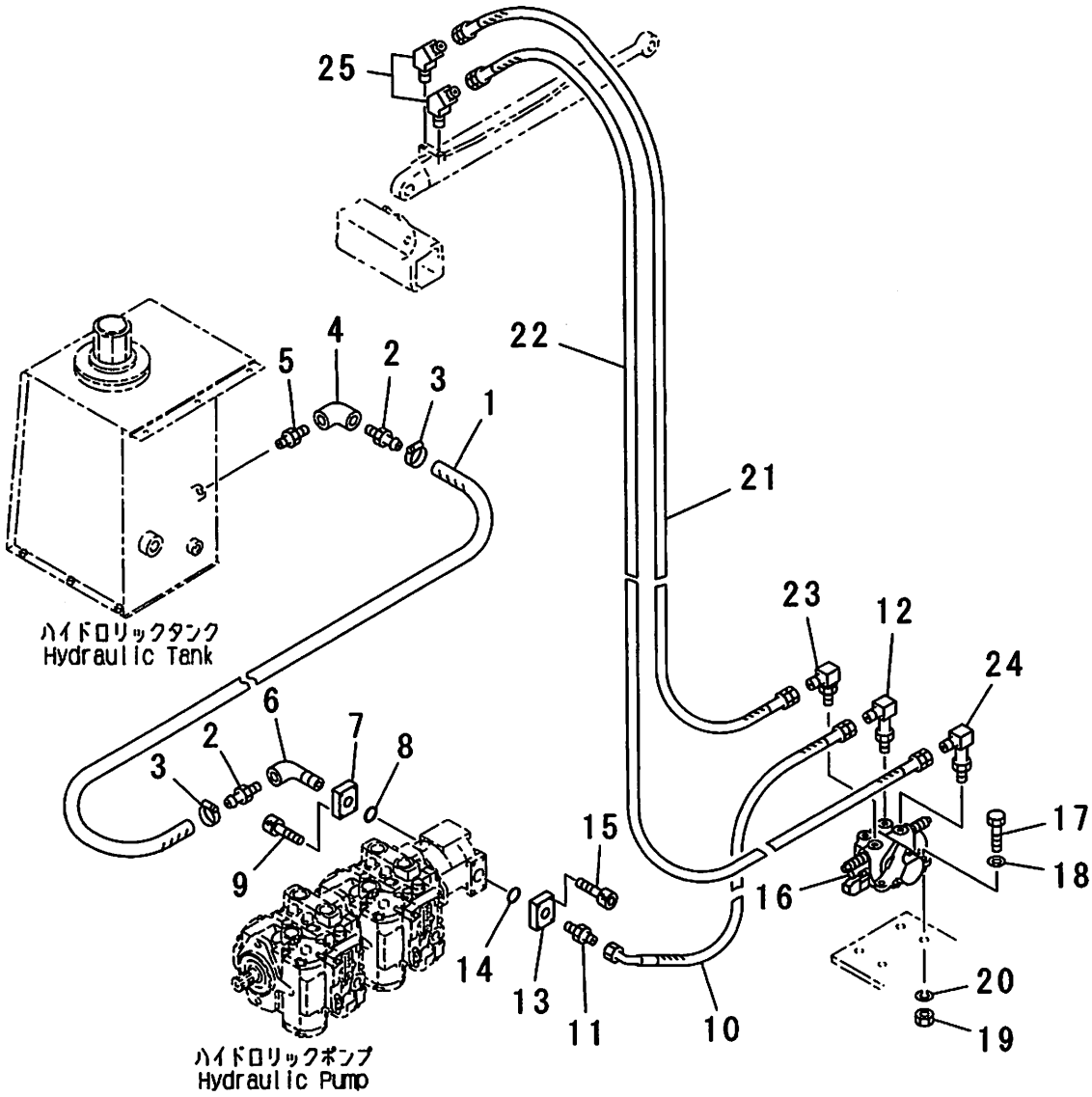

PV93389

FIG.501A

INDEX	PART NO.	DESCRIPTION	Q'TY	SERIAL NO.
1	0-2100-01487	HOSE (1·1/2"X870)	1	60577 ~ 60650
2	0-4220-01414	NIPPLE (PT1·1/2XSLEEVE)	2	60577 ~ 60650
3	0-2700-10044	CLAMP (ABA32-44)	2	60577 ~ 60650
4	0-4360-01414	ELBOW (PT1·1/2XPT1·1/2)	1	60577 ~ 60650
5	0-4212-01414	NIPPLE (PT1·1/2XPT1·1/2)	1	60577 ~ 60650
6	0-4380-01410	ELBOW (PT1·1/2XPT1)	1	60577 ~ 60650
7	1-12670-1410	FLANGE	1	60577 ~ 60650
8	0-2000-03135	O-RING (G35)	1	60577 ~ 60650
9	0-1020-31025	SOCKET HEAD BOLT (M10X25)	4	60577 ~ 60650
10	0-2420-00462	HOSE (1/2"X620)	1	60577 ~ 60650
11	0-4210-00404	NIPPLE (PT1/2XPF1/2)	1	60577 ~ 60650
12	0-4326-01404	ELBOW (UNF7/8XPF1/2)	1	60577 ~ 60650
	0-2040-02520	·O-RING (910)	1	60577 ~ 60650
13	1-23670-1420	FLANGE	1	60577 ~ 60650
14	0-2000-03130	O-RING (G30)	1	60577 ~ 60650
15	0-1020-30825	SOCKET HEAD BOLT (M8X25)	4	60577 ~ 60650
16	1-18620-0013	CONTROL VALVE ASS'Y (KAYABA: KVS65)	1	60577 ~ 60650
17	0-1000-00835	BOLT (M8X35)	3	60577 ~ 60650
18	0-1120-00816	PLANE WASHER (M8)	3	60577 ~ 60650
19	0-1200-00806	NUT (M8)	3	60577 ~ 60650
20	0-1100-00820	SPRING WASHER (M8)	3	60577 ~ 60650
21	0-2210-00359	HOSE (3/8"X590)	1	60577 ~ 60650
22	0-2210-00363	HOSE (3/8"X630)	1	60577 ~ 60650
23	0-4326-01203	ELBOW (UNF3/4XPF3/8)	1	60577 ~ 60650
	0-2040-02217	·O-RING (908)	1	60577 ~ 60650
24	0-4321-01203	ELBOW (UNF3/4XPF3/8)	1	60577 ~ 60650
	0-2040-02217	·O-RING (908)	1	60577 ~ 60650
25	0-4310-00303	ELBOW (PT3/8XPF3/8)	2	60577 ~ 60650

FIG.501B HYDRAULIC PIPING (CONTROL VALVE AND DUMP CYLINDER LINE)
(SERIAL NO. 60651-)

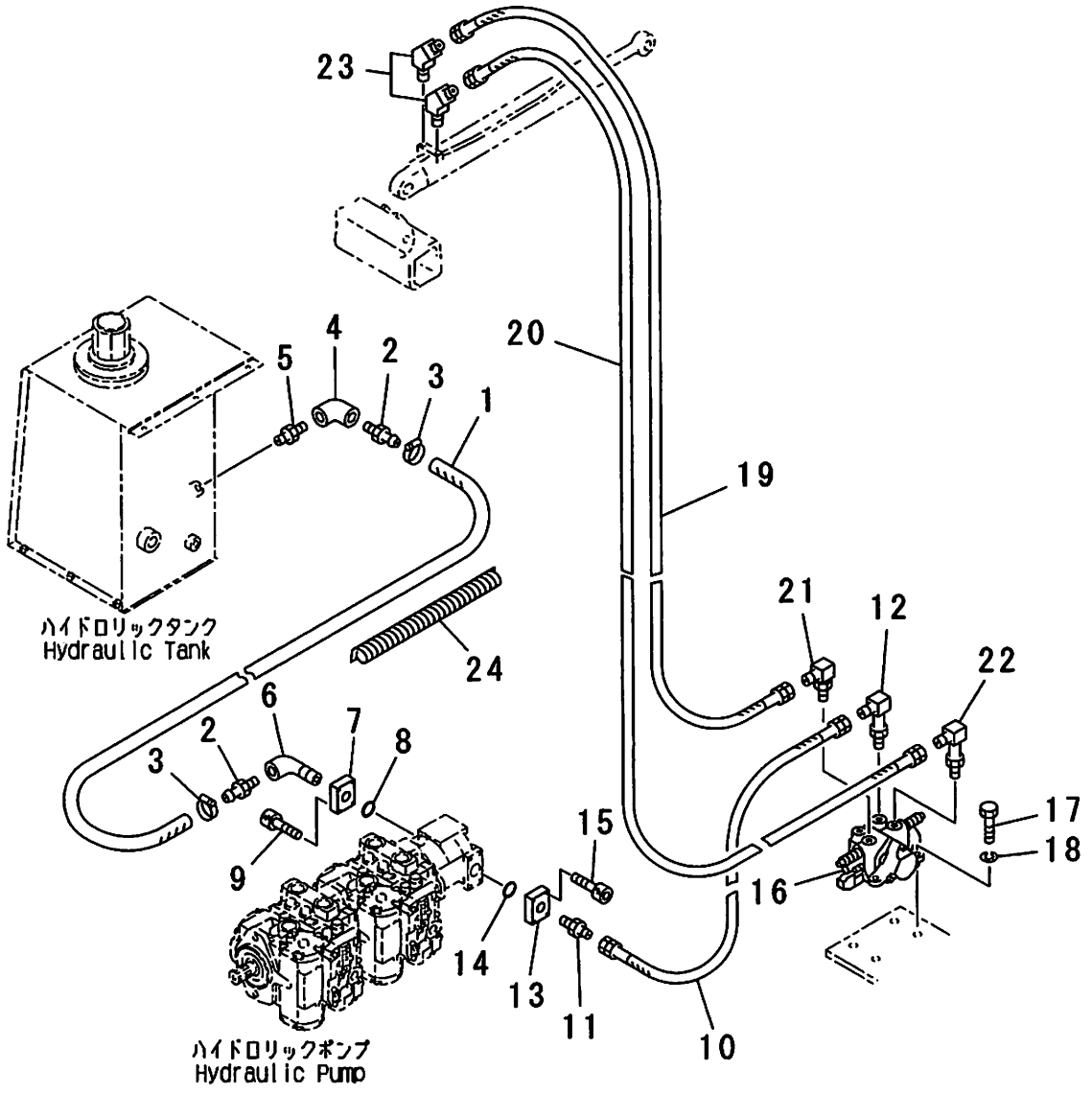

PV93594

FIG.501B

INDEX	PART NO.	DESCRIPTION	Q'TY	SERIAL NO.
1	0-2100-01483	HOSE (1·1/2"X830)	1	60651 ~
2	0-4220-01010	NIPPLE (PT1XSLEEVE)	2	60651 ~
3	0-2700-00050	CLAMP (JUBILEE 2A)	2	60651 ~
4	0-4360-01010	ELBOW (PT1XPT1)	1	60651 ~
5	0-4212-01010	NIPPLE (PT1XPT1)	1	60651 ~
6	0-4380-01010	ELBOW (PT1XPT1)	1	60651 ~
7	1-12670-1410	FLANGE	1	60651 ~
8	0-2000-03140	O-RING (G40)	1	60651 ~
9	0-1020-31025	SOCKET HEAD BOLT (M10X25)	4	60651 ~
10	0-2420-00469	HOSE (1/2"X690)	1	60651 ~
11	0-4210-00404	NIPPLE (PT1/2XPF1/2)	1	60651 ~
12	0-4326-01404	ELBOW (UNF7/8XPF1/2)	1	60651 ~
	0-2040-02520	·O-RING (910)	1	60651 ~
13	1-23670-1420	FLANGE	1	60651 ~
14	0-2000-03130	O-RING (G30)	1	60651 ~
15	0-1020-30825	SOCKET HEAD BOLT (M8X25)	4	60651 ~
16	1-18620-0013	CONTROL VALVE ASS'Y (KAYABA: KVS65)	1	60651 ~
17	0-1000-01030	BOLT (M10X30)	3	60651 ~
18	0-1100-01025	SPRING WASHER (M10)	3	60651 ~
19	0-2210-00375	HOSE (3/8"X750)	1	60651 ~
20	0-2210-00376	HOSE (3/8"X760)	1	60651 ~
21	0-4326-01203	ELBOW (UNF3/4XPF3/8)	1	60651 ~
	0-2040-02217	·O-RING (908)	1	60651 ~
22	0-4321-01203	ELBOW (UNF3/4XPF3/8)	1	60651 ~
	0-2040-02217	·O-RING (908)	1	60651 ~
23	0-4310-00303	ELBOW (PT3/8XPF3/8)	2	60651 ~
24	NK0809-24083-B	SPIRAL TUBE	1	60651 ~

FIG.502 HYDRAULIC PIPING (MAIN PUMP CHARGE LINE)
(SERIAL NO. 60501-60576)

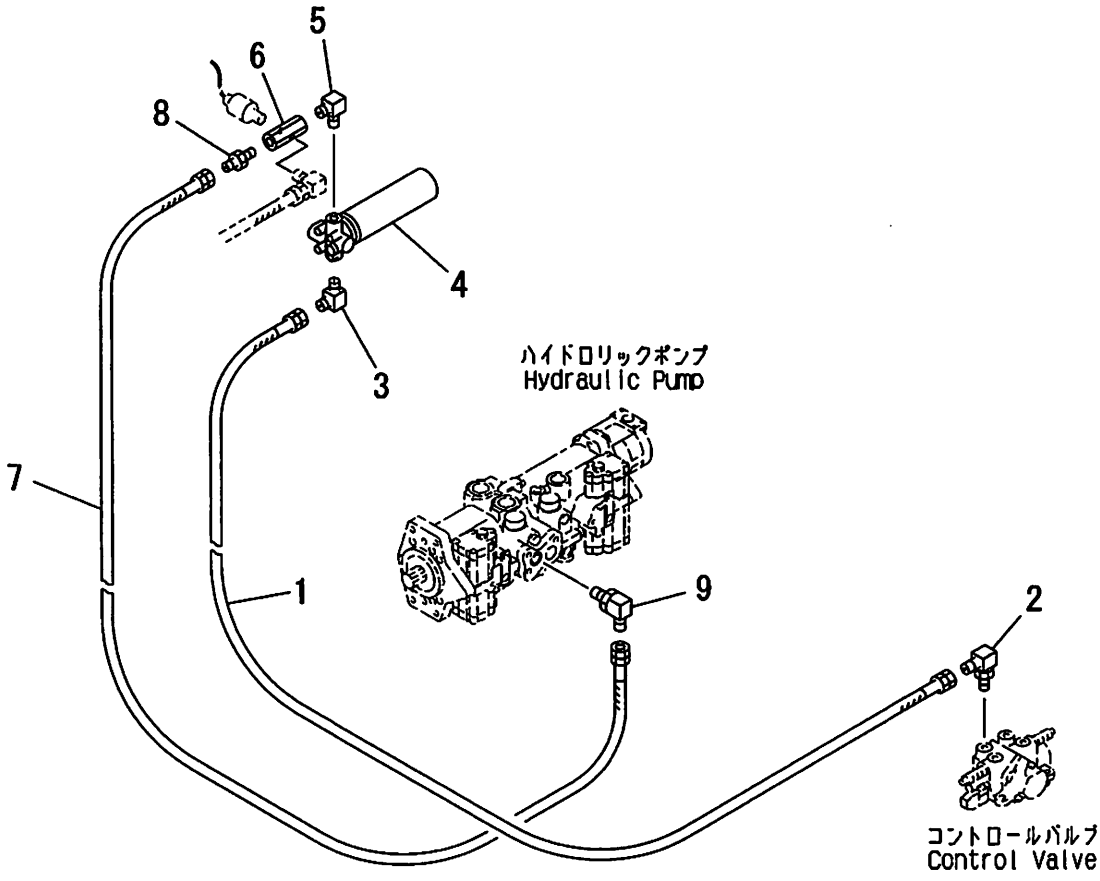

PV93367

FIG.502

INDEX	PART NO.	DESCRIPTION	Q'TY	SERIAL NO.
1	0-2222-00415	HOSE (1/2"X2150)	1	60501 ~ 60576
2	0-4321-01404	ELBOW (UNF7/8XPF1/2)	1	60501 ~ 60576
	0-2040-02520	·O-RING (910)	1	60501 ~ 60576
3	0-4300-00604	ELBOW (PT3/4XPF1/2)	1	60501 ~ 60576
4	1-31650-0010	OIL FILTER ASS'Y	1	60501 ~ 60576
5	0-4301-00604	ELBOW (PT3/4XPT1/2)	1	60501 ~ 60576
6	0-4470-00402	ADAPTER (PT1/2XPT1/4)	1	60501 ~ 60576
7	0-2221-00435	HOSE (1/2"X1350)	1	60501 ~ 60576
8	0-4210-00404	NIPPLE (PT1/2XPF1/2)	1	60501 ~ 60576
9	0-4321-01404	ELBOW (UNF7/8XPF1/2)	1	60501 ~ 60576
	0-2040-02217	·O-RING (908)	1	60501 ~ 60576

FIG.502A HYDRAULIC PIPING (MAIN PUMP CHARGE LINE)
(SERIAL NO. 60577-60650)

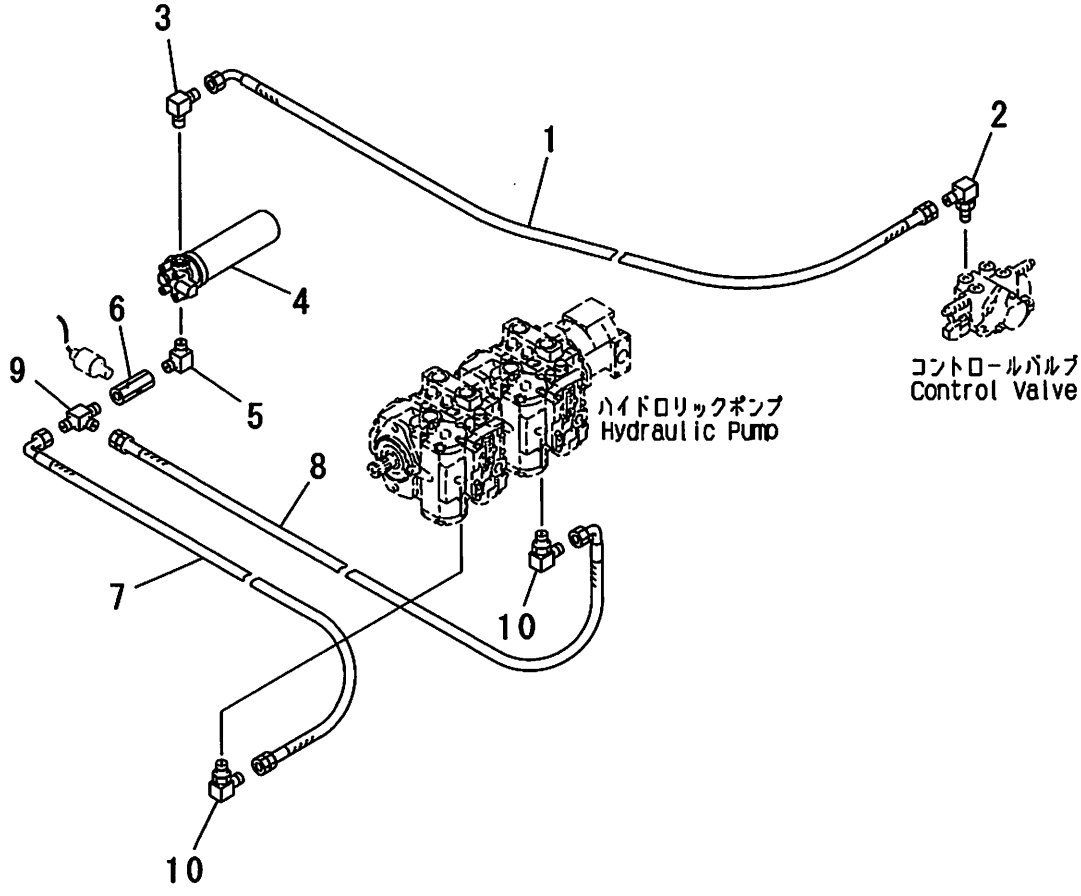

PV93392A

FIG.502A

INDEX	PART NO.	DESCRIPTION	Q'TY	SERIAL NO.
1	0-2420-00477	HOSE (1/2"X770)	1	60577 ~ 60650
2	0-4321-01404	ELBOW (UNF7/8XPF1/2)	1	60577 ~ 60650
	0-2040-02520	·O-RING (910)	1	60577 ~ 60650
3	0-4300-00604	ELBOW (PT3/4XPF1/2)	1	60577 ~ 60650
4	1-31650-0010	OIL FILTER ASS'Y	1	60577 ~ 60650
5	0-4301-00604	ELBOW (PT3/4XPT1/2)	1	60577 ~ 60650
6	0-4470-00402	ADAPTER (PT1/2XPT1/4)	1	60577 ~ 60650
7	0-2420-00440	HOSE (1/2"X400)	1	60577 ~ 60650
8	0-2420-00432	HOSE (1/2"X320)	1	60577 ~ 60650
9	0-4412-00404	TEE (PT1/2XPF1/2XPF1/2)	1	60577 ~ 60650
10	0-4321-00904	ELBOW (UNF9/16XPF1/2)	2	60577 ~ 60650
	0-2040-02217	·O-RING (908)	1	60577 ~ 60650

FIG.502B HYDRAULIC PIPING (MAIN PUMP CHARGE LINE)
(SERIAL NO. 60651-)

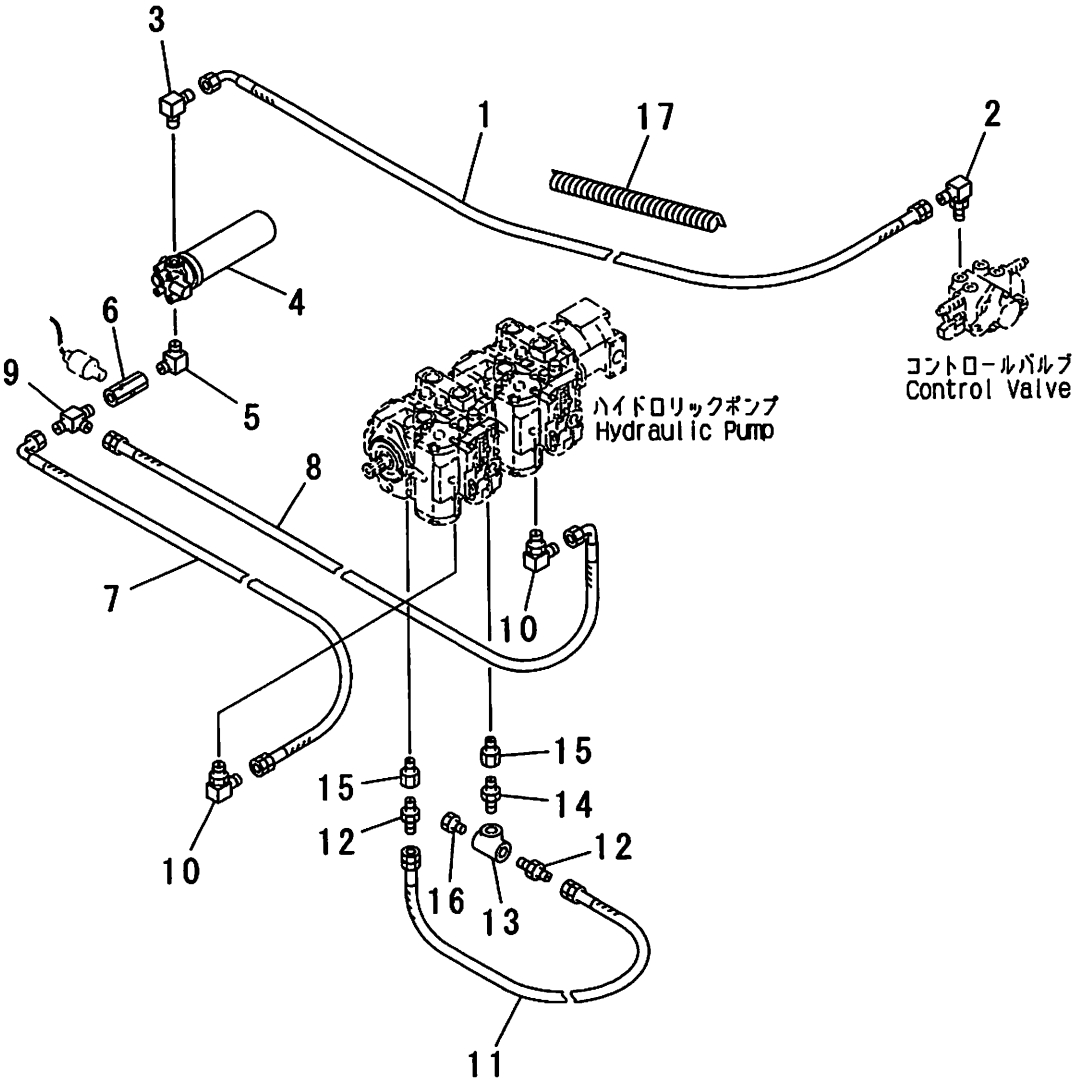

PV93596

FIG.502B

INDEX	PART NO.	DESCRIPTION	Q'TY	SERIAL NO.
1	0-2421-00418	HOSE (1/2"X1180)	1	60651 ~
2	0-4321-01404	ELBOW (UNF7/8XPF1/2)	1	60651 ~
	0-2040-02520	•O-RING (910)	1	60651 ~
3	0-4300-00604	ELBOW (PT3/4XPF1/2)	1	60651 ~
4	1-31650-0010	OIL FILTER ASS'Y	1	60651 ~
5	0-4301-00604	ELBOW (PT3/4XPT1/2)	1	60651 ~
6	0-4470-00402	ADAPTER (PT1/2XPT1/4)	1	60651 ~
7	0-2420-00440	HOSE (1/2"X400)	1	60651 ~
8	0-2420-00432	HOSE (1/2"X320)	1	60651 ~
9	0-4412-00404	TEE (PT1/2XPF1/2XPF1/2)	1	60651 ~
10	0-4321-00904	ELBOW (UNF9/16XPF1/2)	2	60651 ~
	0-2040-02217	•O-RING (908)	1	60651 ~
11	0-2220-00660	HOSE (3/4"X600)	1	60651 ~
12	0-4210-00606	NIPPLE (PT3/4XPF3/4)	2	60651 ~
13	0-4405-00606	TEE (PT3/4XPT3/4XPT3/4)	1	60651 ~
14	0-4212-00606	NIPPLE (PT3/4XPT3/4)	1	60651 ~
15	0-4121-02106	ADAPTER (UNF1•5/16XPT3/4)	2	60651 ~
	0-2040-03030	•O-RING (916)	1	60651 ~
16	0-4000-00600	PLUG (PT3/4)	1	60651 ~
17	NK0809-17040-B	SPIRAL TUBE (Φ 17x400)	1	60651 ~

FIG.503 HYDRAULIC PIPING (HST MAIN LINE) (SERIAL NO. 60501-60576)

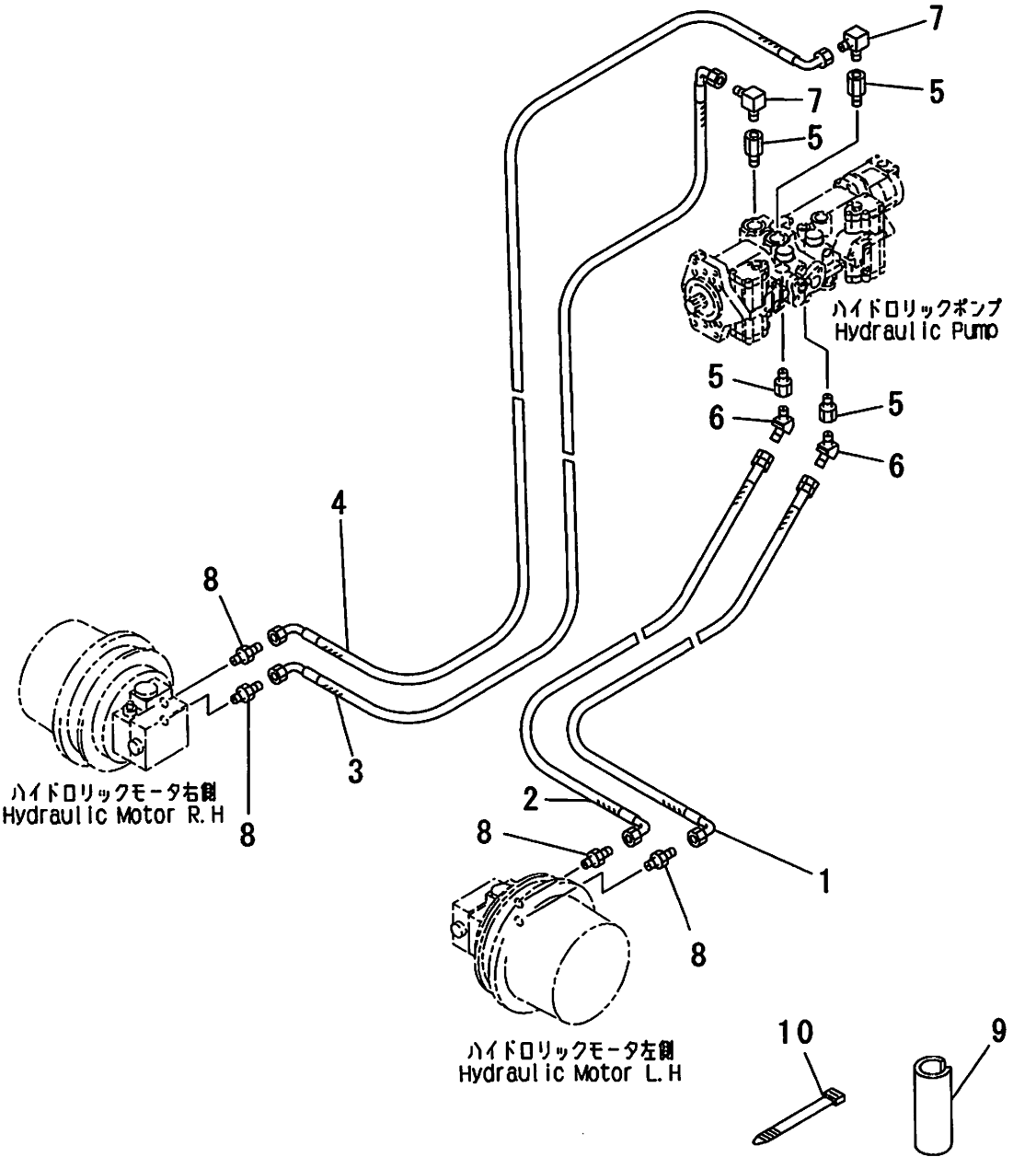

FIG.503

INDEX	PART NO.	DESCRIPTION	Q'TY	SERIAL NO.
1	0-2471-00630	HOSE (3/4"X1300)	1	60501 ~ 60576
2	0-2471-00625	HOSE (3/4"X1250)	1	60501 ~ 60576
3	1-50670-2110	HOSE (3/4"X1400)	1	60501 ~ 60576
4	1-50670-2120	HOSE (3/4"X1450)	1	60501 ~ 60576
5	0-4121-02106	ADAPTER (1·5/16XPT3/4)	4	60501 ~ 60576
	0-2040-03030	·O-RING (916)	1	60501 ~ 60576
6	0-4310-00606	ELBOW (PT3/4XPF3/4)	2	60501 ~ 60576
7	0-4300-00606	ELBOW (PT3/4XPF3/4)	2	60501 ~ 60576
8	0-4211-00406	NIPPLE (PF1/2XPF3/4)	4	60501 ~ 60576
	0-2010-02418	·O-RING (P18)	1	60501 ~ 60576
9	0-2840-02013	RUBBER SHEET	AR	60501 ~ 60576
	0-2840-02020	RUBBER SHEET	AR	60501 ~ 60576
10	0-2800-00202	STRAP BAND	AR	60501 ~ 60576
	0-2800-00383	STRAP BAND	AR	60501 ~ 60576

FIG.503A HYDRAULIC PIPING (HST MAIN LINE) (SERIAL NO. 60577-)

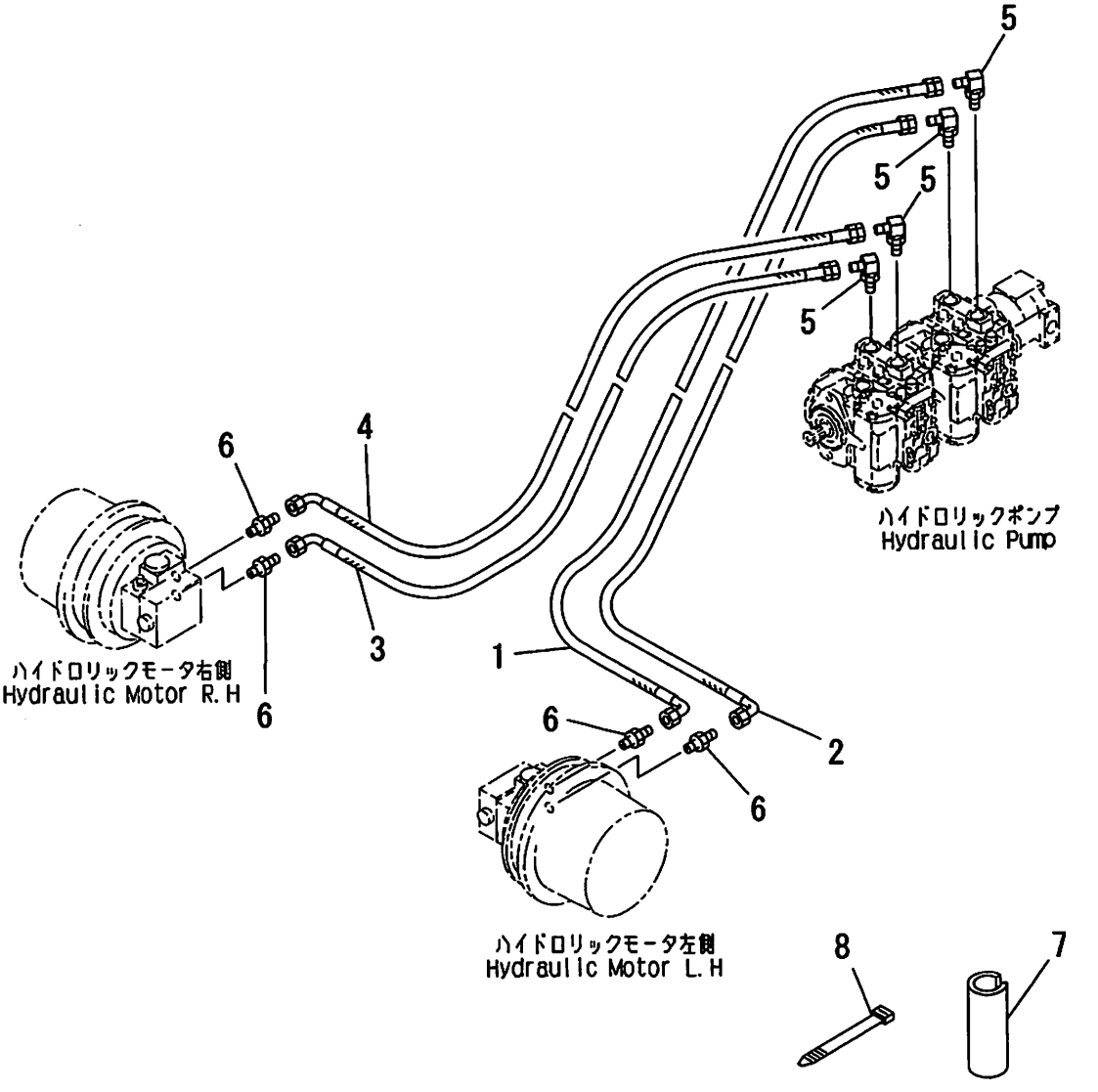

FIG.503A

INDEX	PART NO.	DESCRIPTION	Q'TY	SERIAL NO.
1	0-2471-00670	HOSE (3/4"X1700)	1	60577 ~
2	0-2471-00665	HOSE (3/4"X1650)	1	60577 ~
3	0-2471-00625	HOSE (3/4"X1250)	1	60577 ~
4	0-2471-00632	HOSE (3/4"X1320)	1	60577 ~
5	0-4321-01706	ELBOW (1·1/16XPT3/4)	4	60577 ~
	0-2040-03024	·O-RING (912)	1	60577 ~
6	0-4211-00406	NIPPLE (PF1/2XPF3/4)	4	60577 ~
	0-2010-02418	·O-RING (P18)	1	60577 ~
7	0-2840-02013	RUBBER SHEET	AR	60577 ~
	0-2840-02020	RUBBER SHEET	AR	60577 ~
8	0-2800-00202	STRAP BAND	AR	60577 ~
	0-2800-00383	STRAP BAND	AR	60577 ~

FIG.504 HYDRAULIC PIPING (PARKING BRAKE AND H-L SPEED SELECTOR VALVE LINE) (SERIAL NO. 60501-60576)

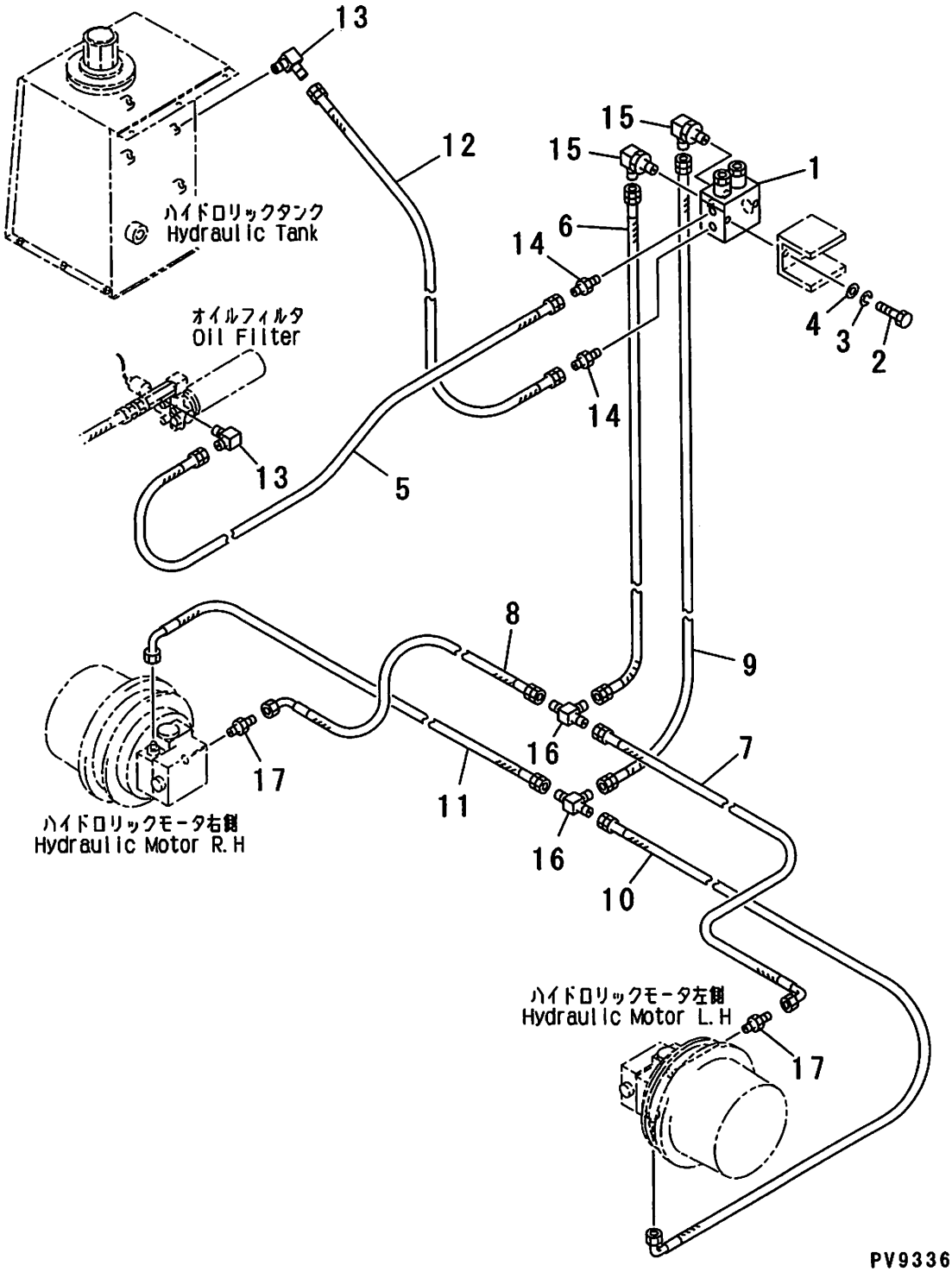

FIG.504

INDEX	PART NO.	DESCRIPTION	Q'TY	SERIAL NO.
1	1-50620-0030	SOLENOID VALVE ASS'Y (FOR PARKING BRAKE AND H-L SPEED)	1	60501 ~ 60576
2	0-1000-00820	BOLT (M8X20)	2	60501 ~ 60576
3	0-1100-00820	SPRING WASHER (M8)	2	60501 ~ 60576
4	0-1120-00816	PLANE WASHER (M8)	2	60501 ~ 60576
5	0-2231-00250	SUPPLY HOSE (1/4"X1500)	1	60501 ~ 60576
6	0-2231-00205	PARKING BRAKE HOSE (1/4"X1050)	1	60501 ~ 60576
7	0-2430-00236	PARKING BRAKE HOSE (1/4"X360)	1	60501 ~ 60576
8	0-2430-00267	PARKING BRAKE HOSE (1/4"X670)	1	60501 ~ 60576
9	0-2231-00200	H-L SPEED SELECT HOSE (1/4"X1000)	1	60501 ~ 60576
10	0-2430-00256	H-L SPEED SELECT HOSE (1/4"X560)	1	60501 ~ 60576
11	0-2430-00297	H-L SPEED SELECT HOSE (1/4"X970)	1	60501 ~ 60576
12	0-2231-00245	RETURN HOSE (1/4"X1450)	1	60501 ~ 60576
13	0-4300-00202	ELBOW (PT1/4XPF1/4)	2	60501 ~ 60576
14	0-4211-00202	NIPPLE (PF1/4XPF1/4)	2	60501 ~ 60576
	0-2010-02411	·O-RING (P11)	1	60501 ~ 60576
15	0-4320-00202	ELBOW (PF1/4XPF1/4)	2	60501 ~ 60576
	0-2010-02411	·O-RING (P11)	1	60501 ~ 60576
16	0-4410-00202	TEE (PF1/4XPF1/4XPF1/4)	2	60501 ~ 60576
17	0-4211-00202	NIPPLE (PF1/4XPF1/4)	2	60501 ~ 60576
	0-2010-02411	·O-RING (P11)	1	60501 ~ 60576

FIG.504A HYDRAULIC PIPING (PARKING BRAKE AND H-L SPEED SELECTOR VALVE LINE) (SERIAL NO. 60577-60650)

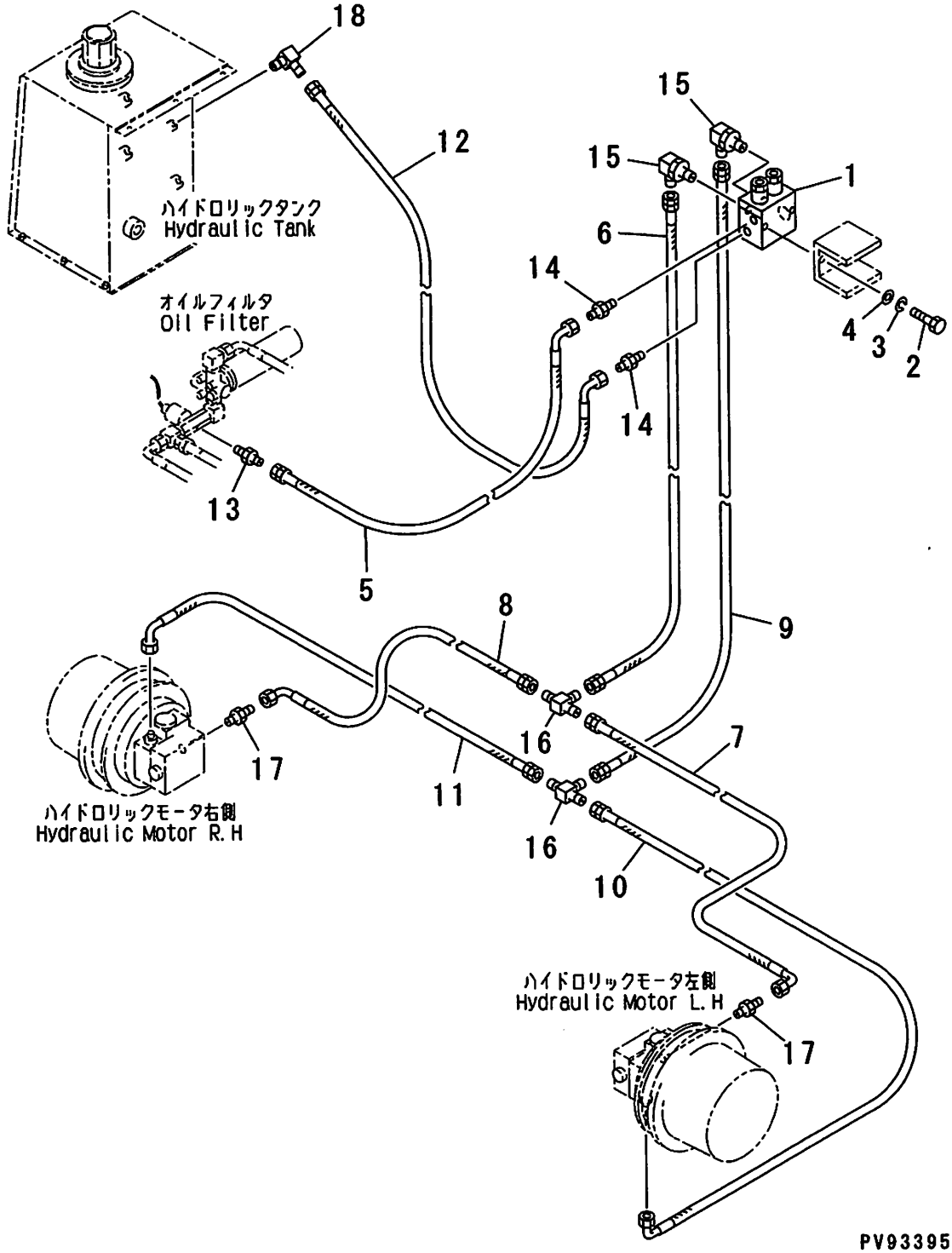

FIG.504A

INDEX	PART NO.	DESCRIPTION	Q'TY	SERIAL NO.
1	1-50620-0030	SOLENOID VALVE ASS'Y (FOR PARKING BRAKE AND H-L SPEED)	1	60577 ~ 60650
2	0-1000-00820	BOLT (M8X20)	2	60577 ~ 60650
3	0-1100-00820	SPRING WASHER (M8)	2	60577 ~ 60650
4	0-1120-00816	PLANE WASHER (M8)	2	60577 ~ 60650
5	0-2430-00260	SUPPLY HOSE (1/4"X600)	1	60577 ~ 60650
6	0-2230-00295	PARKING BRAKE HOSE (1/4"X950)	1	60577 ~ 60650
7	0-2430-00236	PARKING BRAKE HOSE (1/4"X360)	1	60577 ~ 60650
8	0-2430-00267	PARKING BRAKE HOSE (1/4"X670)	1	60577 ~ 60650
9	0-2231-00200	H-L SPEED SELECT HOSE (1/4"X1000)	1	60577 ~ 60650
10	0-2430-00256	H-L SPEED SELECT HOSE (1/4"X560)	1	60577 ~ 60650
11	0-2430-00296	H-L SPEED SELECT HOSE (1/4"X960)	1	60577 ~ 60650
12	0-2431-00245	RETURN HOSE (1/4"X1450)	1	60577 ~ 60650
13	0-4210-00202	NIPPLE (PT1/4XPF1/4)	1	60577 ~ 60650
14	0-4211-00202	NIPPLE (PF1/4XPF1/4)	2	60577 ~ 60650
	0-2010-02411	·O-RING (P11)	1	60577 ~ 60650
15	0-4320-00202	ELBOW (PF1/4XPF1/4)	2	60577 ~ 60650
	0-2010-02411	·O-RING (P11)	1	60577 ~ 60650
16	0-4410-00202	TEE (PF1/4XPF1/4XPF1/4)	2	60577 ~ 60650
17	0-4211-00202	NIPPLE (PF1/4XPF1/4)	2	60577 ~ 60650
	0-2010-02411	·O-RING (P11)	1	60577 ~ 60650
18	0-4300-00202	ELBOW (PT1/4XPF1/4)	1	60577 ~ 60650

FIG.504B HYDRAULIC PIPING (PARKING BRAKE AND H-L SPEED SELECTOR VALVE LINE) (SERIAL NO. 60651-)

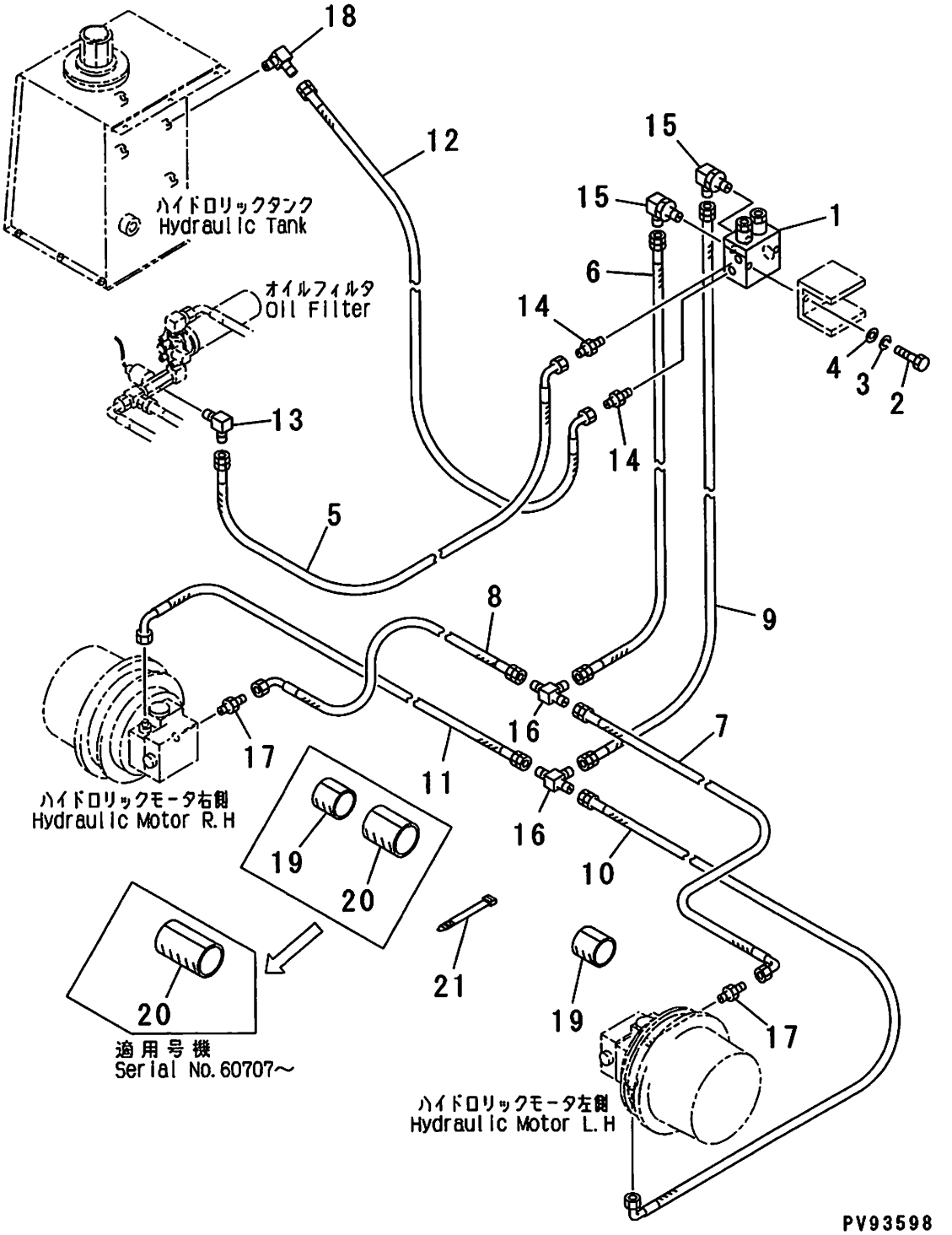

FIG.504B

INDEX	PART NO.	DESCRIPTION	Q'TY	SERIAL NO.
1	1-50620-0030	SOLENOID VALVE ASS'Y (FOR PARKING BRAKE AND H-L SPEED)	1	60651 ~
2	0-1000-00820	BOLT (M8X20)	2	60651 ~
3	0-1100-00820	SPRING WASHER (M8)	2	60651 ~
4	0-1120-00816	PLANE WASHER (M8)	2	60651 ~
5	0-2430-00260	SUPPLY HOSE (1/4"X600)	1	60651 ~
6	0-2230-00295	PARKING BRAKE HOSE (1/4"X950)	1	60651 ~
7	0-2430-00236	PARKING BRAKE HOSE (1/4"X360)	1	60651 ~
8	0-2430-00267	PARKING BRAKE HOSE (1/4"X670)	1	60651 ~
9	0-2231-00200	H-L SPEED SELECT HOSE (1/4"X1000)	1	60651 ~
10	0-2430-00256	H-L SPEED SELECT HOSE (1/4"X560)	1	60651 ~
11	0-2430-00296	H-L SPEED SELECT HOSE (1/4"X960)	1	60651 ~
12	0-2431-00245	RETURN HOSE (1/4"X1450)	1	60651 ~
13	0-4300-00202	ELBOW (PT1/4XPF1/4)	1	60651 ~
14	0-4211-00202	NIPPLE (PF1/4XPF1/4)	2	60651 ~
	0-2010-02411	·O-RING (P11)	1	60651 ~
15	0-4320-00202	ELBOW (PF1/4XPF1/4)	2	60651 ~
	0-2010-02411	·O-RING (P11)	1	60651 ~
16	0-4410-00202	TEE (PF1/4XPF1/4XPF1/4)	2	60651 ~
17	0-4211-00202	NIPPLE (PF1/4XPF1/4)	2	60651 ~
	0-2010-02411	·O-RING (P11)	1	60651 ~
18	0-4300-00202	ELBOW (PT1/4XPF1/4)	1	60651 ~
19	NK0827-45020	HOSE GUARD (Φ 45x200L)	2	60651 ~ 60706
	NK0827-45020	HOSE GUARD (Φ 45x200L)	1	60707 ~
20	NK0827-60020	HOSE GUARD (Φ 60x200L)	1	60651 ~ 60706
	NK0827-60050	HOSE GUARD (Φ 60x500L)	1	60707 ~
21	NK0805-50250	STRAP BAND (250L)	AR	60651 ~

FIG.505 HYDRAULIC PIPING (OIL COOLER AND RETURN LINE)
(SERIAL NO. 60501-60576)

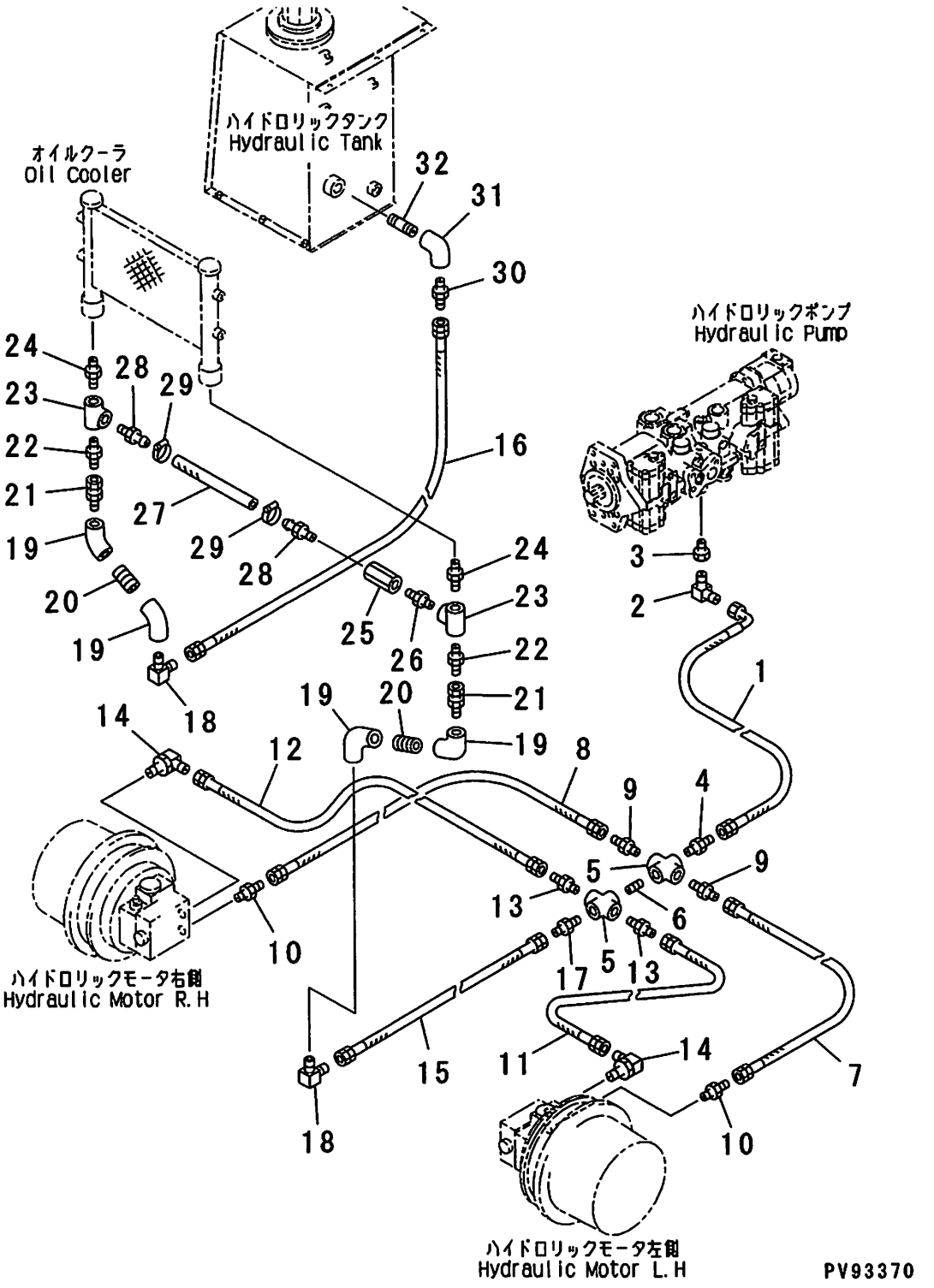

FIG.505

INDEX	PART NO.	DESCRIPTION	Q'TY	SERIAL NO.
1	0-2430-00690	HOSE (3/4"X900)	1	60501 ~ 60576
2	0-4300-00606	ELBOW (PT3/4XPF3/4)	1	60501 ~ 60576
3	0-4121-01706	ADAPTER (UNF1·1/16XPT3/4)	1	60501 ~ 60576
	0-2040-03024	·O-RING (912)	1	60501 ~ 60576
4	0-4210-00606	NIPPLE (PT3/4XPF3/4)	1	60501 ~ 60576
5	0-4450-00606	CROSS (PT3/4)	2	60501 ~ 60576
6	0-4212-00606	NIPPLE (PT3/4XPT3/4)	1	60501 ~ 60576
7	0-2230-00347	HOSE (3/8"X470)	1	60501 ~ 60576
8	0-2230-00383	HOSE (3/8"X830)	1	60501 ~ 60576
9	0-4210-00603	NIPPLE (PT3/4XPF3/8)	2	60501 ~ 60576
10	0-4211-00303	NIPPLE (PF3/8XPF3/8)	2	60501 ~ 60576
	0-2010-02414	·O-RING (P14)	1	60501 ~ 60576
11	0-2230-00427	HOSE (1/2"X270)	1	60501 ~ 60576
12	0-2230-00463	HOSE (1/2"X630)	1	60501 ~ 60576
13	0-4210-00604	NIPPLE (PT3/4XPF1/2)	2	60501 ~ 60576
14	0-4320-00404	ELBOW (PF1/2XPF1/2)	2	60501 ~ 60576
	0-2010-02418	·O-RING (P18)	1	60501 ~ 60576
15	0-2230-01029	HOSE (1"X290)	1	60501 ~ 60576
16	0-2231-01000	HOSE (1"X1000)	1	60501 ~ 60576
17	0-4210-00610	NIPPLE (PT3/4XPF1)	1	60501 ~ 60576
18	0-4300-01010	ELBOW (PT1XPF1)	2	60501 ~ 60576
19	0-4370-01010	ELBOW (PT1XPT1)	4	60501 ~ 60576
20	0-4200-01010	NIPPLE (PT1)	2	60501 ~ 60576
21	0-4130-01010	ADAPTER (PT1XPF1)	2	60501 ~ 60576
22	0-4210-01010	NIPPLE (PT1XPF1)	2	60501 ~ 60576
23	0-4400-01006	TEE (PT1XPT1XPT3/4)	2	60501 ~ 60576
24	0-4212-01010	NIPPLE (PT1XPT1)	2	60501 ~ 60576
25	1-21670-1210	CHECK VALVE (ICV06RC-1.7)	1	60501 ~ 60576
26	0-4212-00606	NIPPLE (PT3/4XPT3/4)	1	60501 ~ 60576
27	0-2100-00630	HOSE (3/4"X300)	1	60501 ~ 60576
28	0-4220-00606	NIPPLE (PT3/4XSLEEVE3/4")	2	60501 ~ 60576
29	0-2700-00035	CLAMP (JUBILEE 1A)	2	60501 ~ 60576
30	0-4210-01010	NIPPLE (PT1XPF1)	1	60501 ~ 60576
31	0-4360-01010	ELBOW (PT1XPT1)	1	60501 ~ 60576
32	1-29670-1110	JOINT (L=120)	1	60501 ~ 60576

FIG.505A HYDRAULIC PIPING (OIL COOLER AND RETURN LINE)
(SERIAL NO. 60577-60650)

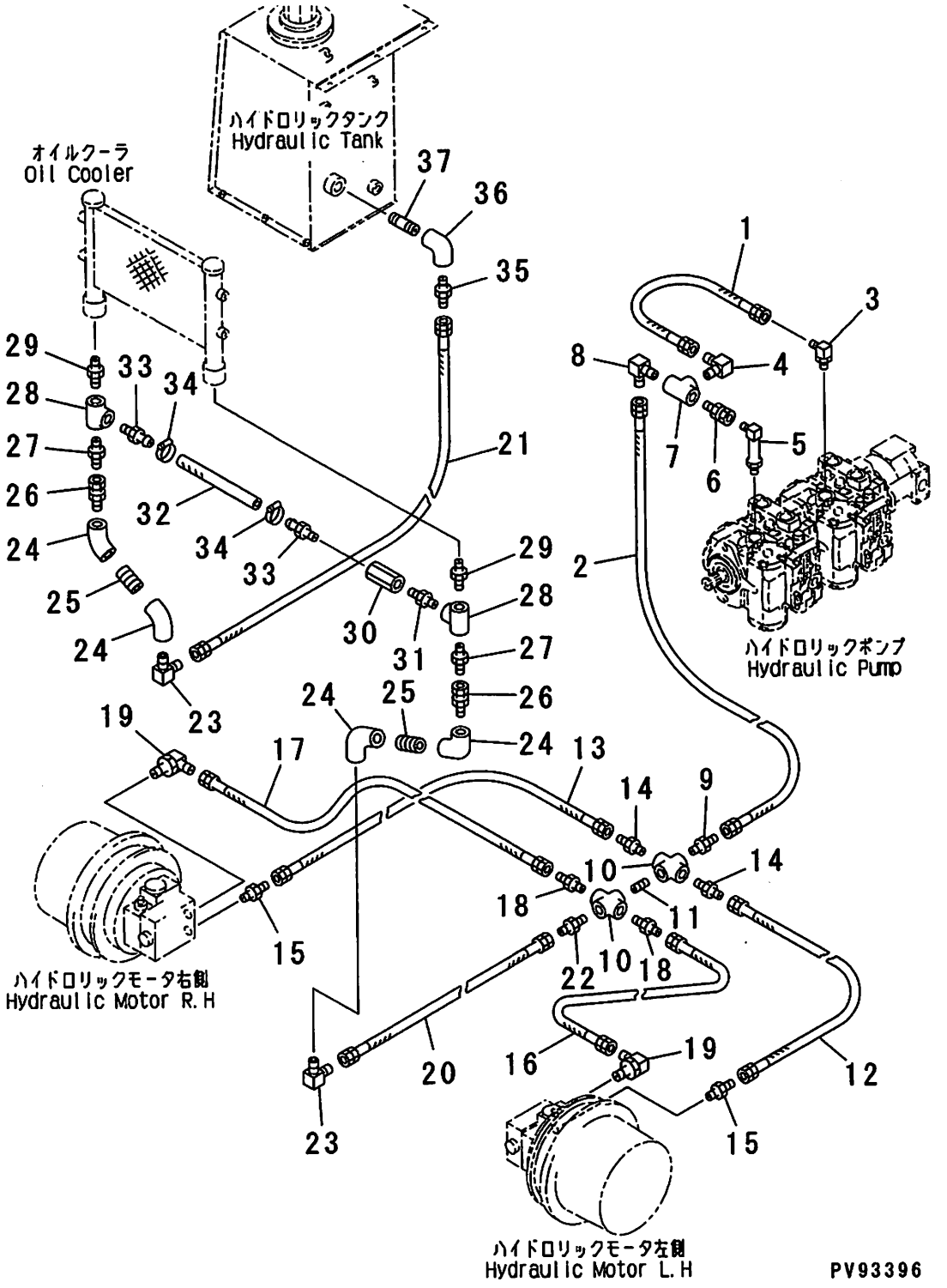

FIG.505A

INDEX	PART NO.	DESCRIPTION	Q'TY	SERIAL NO.
1	0-2220-00655	HOSE (3/4"X550)	1	60577 ~ 60650
2	0-2231-01000	HOSE (1"X1000)	1	60577 ~ 60650
3	0-4321-02106	ELBOW (UNF1·5/16XPT3/4)	1	60577 ~ 60650
	0-2040-03030	·O-RING (916)	1	60577 ~ 60650
4	0-4300-00606	ELBOW (PT3/4XPF3/4)	1	60577 ~ 60650
5	0-4326-02106	ELBOW (UNF1·5/16XPF3/4)	1	60577 ~ 60650
	0-2040-03030	·O-RING (916)	1	60577 ~ 60650
6	0-4130-00606	ADAPTER (PT3/4XPF3/4)	1	60577 ~ 60650
7	0-4405-00606	TEE (PT3/4XPT3/4XPT3/4)	1	60577 ~ 60650
8	0-4300-00610	ELBOW (PT3/4XPF1)	1	60577 ~ 60650
9	0-4210-00610	NIPPLE (PT3/4XPF1)	1	60577 ~ 60650
10	0-4450-00606	CROSS (PT3/4)	2	60577 ~ 60650
11	0-4212-00606	NIPPLE (PT3/4XPT3/4)	1	60577 ~ 60650
12	0-2230-00347	HOSE (3/8"X470)	1	60577 ~ 60650
13	0-2230-00384	HOSE (3/8"X840)	1	60577 ~ 60650
14	0-4210-00603	NIPPLE (PT3/4XPF3/8)	2	60577 ~ 60650
15	0-4211-00303	NIPPLE (PF3/8XPF3/8)	2	60577 ~ 60650
	0-2010-02414	·O-RING (P14)	1	60577 ~ 60650
16	0-2230-00427	HOSE (1/2"X270)	1	60577 ~ 60650
17	0-2230-00463	HOSE (1/2"X630)	1	60577 ~ 60650
18	0-4210-00604	NIPPLE (PT3/4XPF1/2)	2	60577 ~ 60650
19	0-4320-00404	ELBOW (PF1/2XPF1/2)	2	60577 ~ 60650
	0-2010-02418	·O-RING (P18)	1	60577 ~ 60650
20	0-2230-01035	HOSE (1"X350)	1	60577 ~ 60650
21	0-2231-01000	HOSE (1"X1000)	1	60577 ~ 60650
22	0-4210-00610	NIPPLE (PT3/4XPF1)	1	60577 ~ 60650
23	0-4300-01010	ELBOW (PT1XPF1)	2	60577 ~ 60650
24	0-4370-01010	ELBOW (PT1XPT1)	4	60577 ~ 60650
25	0-4200-01010	NIPPLE (PT1)	2	60577 ~ 60650
26	0-4130-01010	ADAPTER (PT1XPF1)	2	60577 ~ 60650
27	0-4210-01010	NIPPLE (PT1XPF1)	2	60577 ~ 60650
28	0-4400-01006	TEE (PT1XPT1XPT3/4)	2	60577 ~ 60650
29	0-4212-01010	NIPPLE (PT1XPT1)	2	60577 ~ 60650
30	1-21670-1210	CHECK VALVE (ICV06RC-1.7)	1	60577 ~ 60650
31	0-4212-00606	NIPPLE (PT3/4XPT3/4)	1	60577 ~ 60650
32	0-2100-00630	HOSE (3/4"X300)	1	60577 ~ 60650
33	0-4220-00606	NIPPLE (PT3/4XSLEEVE3/4")	2	60577 ~ 60650
34	0-2700-00035	CLAMP (JUBILEE 1A)	2	60577 ~ 60650
35	0-4210-01010	NIPPLE (PT1XPF1)	1	60577 ~ 60650
36	0-4360-01010	ELBOW (PT1XPT1)	1	60577 ~ 60650

FIG.505A

INDEX	PART NO.	DESCRIPTION	Q'TY	SERIAL NO.
37	1-29670-1110	JOINT (L=120)	1	60577 ~ 60650

FIG.505B HYDRAULIC PIPING (OIL COOLER AND RETURN LINE)
(SERIAL NO. 60651-)

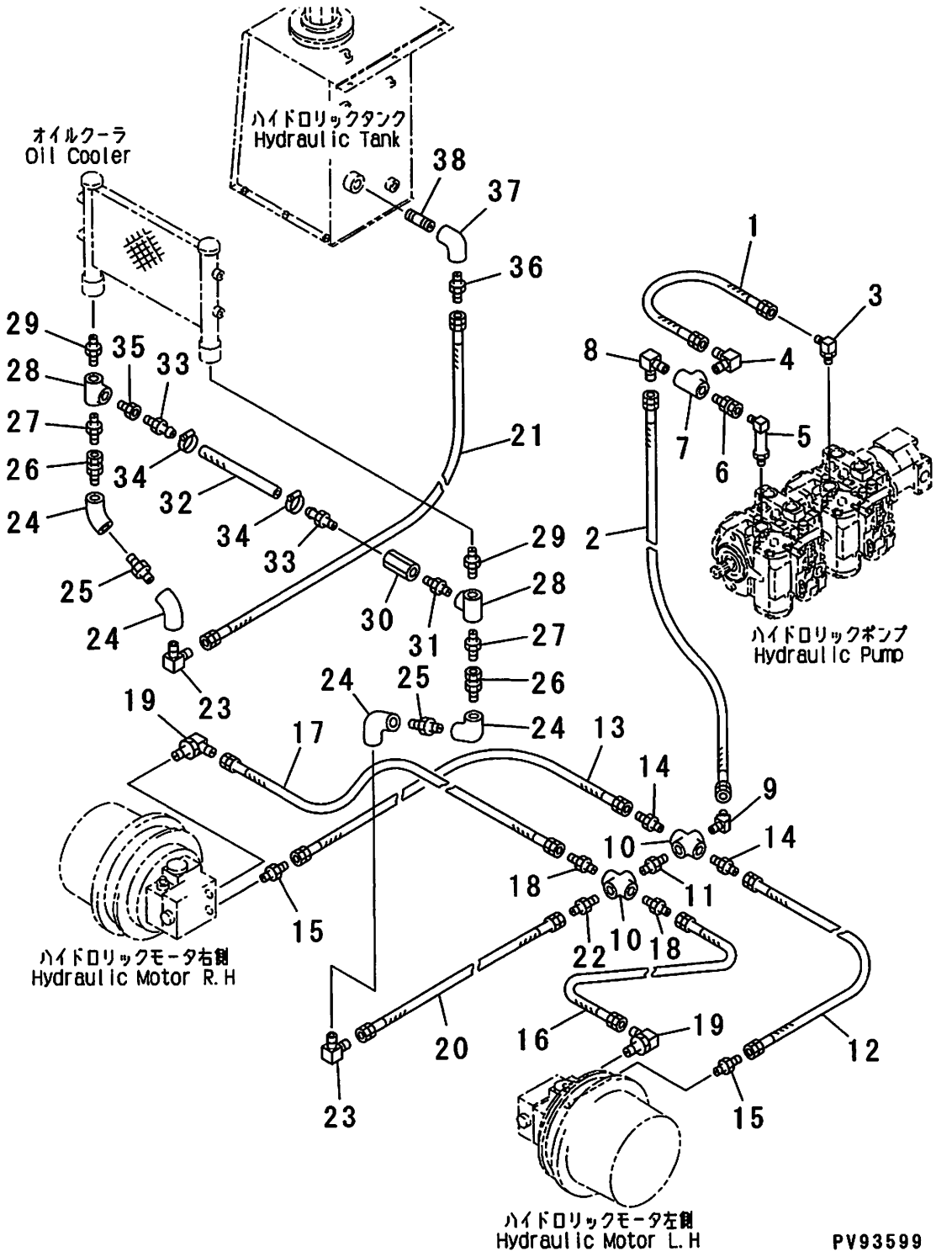

FIG.505B

INDEX	PART NO.	DESCRIPTION	Q'TY	SERIAL NO.
1	0-2220-00662	HOSE (3/4"X620)	1	60651 ~
2	0-2231-00600	HOSE (3/4"X1000)	1	60651 ~
3	0-4321-02106	ELBOW (UNF1·5/16XPT3/4)	1	60651 ~
	0-2040-03030	·O-RING (916)	1	60651 ~
4	0-4300-00606	ELBOW (PT3/4XPF3/4)	1	60651 ~
5	0-4326-02106	ELBOW (UNF1·5/16XPF3/4)	1	60651 ~
	0-2040-03030	·O-RING (916)	1	60651 ~
6	0-4130-00606	ADAPTER (PT3/4XPF3/4)	1	60651 ~
7	0-4405-00606	TEE (PT3/4XPT3/4XPT3/4)	1	60651 ~
8	0-4300-00606	ELBOW (PT3/4XPF3/4)	1	60651 ~
9	0-4310-00606	ELBOW (PT3/4XPF3/4)	1	60651 ~
10	0-4450-00606	CROSS (PT3/4)	2	60651 ~
11	0-4212-00606	NIPPLE (PT3/4XPT3/4)	1	60651 ~
12	0-2230-00347	HOSE (3/8"X470)	1	60651 ~
13	0-2230-00384	HOSE (3/8"X840)	1	60651 ~
14	0-4210-00603	NIPPLE (PT3/4XPF3/8)	2	60651 ~
15	0-4211-00303	NIPPLE (PF3/8XPF3/8)	2	60651 ~
	0-2010-02414	·O-RING (P14)	1	60651 ~
16	0-2230-00427	HOSE (1/2"X270)	1	60651 ~
17	0-2230-00464	HOSE (1/2"X640)	1	60651 ~
18	0-4210-00604	NIPPLE (PT3/4XPF1/2)	2	60651 ~
19	0-4320-00404	ELBOW (PF1/2XPF1/2)	2	60651 ~
	0-2010-02418	·O-RING (P18)	1	60651 ~
20	0-2230-01030	HOSE (1"X300)	1	60651 ~
21	0-2231-01006	HOSE (1"X1006)	1	60651 ~
22	0-4210-00610	NIPPLE (PT3/4XPF1)	1	60651 ~
23	0-4300-01010	ELBOW (PT1XPF1)	2	60651 ~
24	0-4370-01010	ELBOW (PT1XPT1)	4	60651 ~
25	0-4212-01010	NIPPLE (PT1XPT1)	2	60651 ~
26	0-4130-01010	ADAPTER (PT1XPF1)	2	60651 ~
27	0-4210-01010	NIPPLE (PT1XPF1)	2	60651 ~
28	0-4400-01010	TEE (PT1XPT1XPT1)	2	60651 ~
29	0-4212-00610	NIPPLE (PT1XPT3/4)	2	60651 ~
30	1-21670-1210	CHECK VALVE (ICV06RC-1.7)	1	60651 ~
31	0-4212-00610	NIPPLE (PT1XPT3/4)	1	60651 ~
32	0-2100-00629	HOSE (3/4"X290)	1	60651 ~
33	0-4220-00606	NIPPLE (PT3/4XSLEEVE3/4")	2	60651 ~
34	0-2700-00035	CLAMP (JUBILEE 1A)	2	60651 ~
35	0-4100-01006	ADAPTER (PT1XPT3/4)	1	60651 ~
36	0-4210-01010	NIPPLE (PT1XPF1)	1	60651 ~

FIG.505B

INDEX	PART NO.	DESCRIPTION	Q'TY	SERIAL NO.
37	0-4360-01010	ELBOW (PT1XPT1)	1	60651 ~
38	NK0564-16150-L	NIPPLE (PT1XPT1, L=150)	1	60651 ~

FIG.506 HYDRAULIC PIPING (MAIN PUMP RETURN LINE)
(SERIAL NO. 60577-60650)

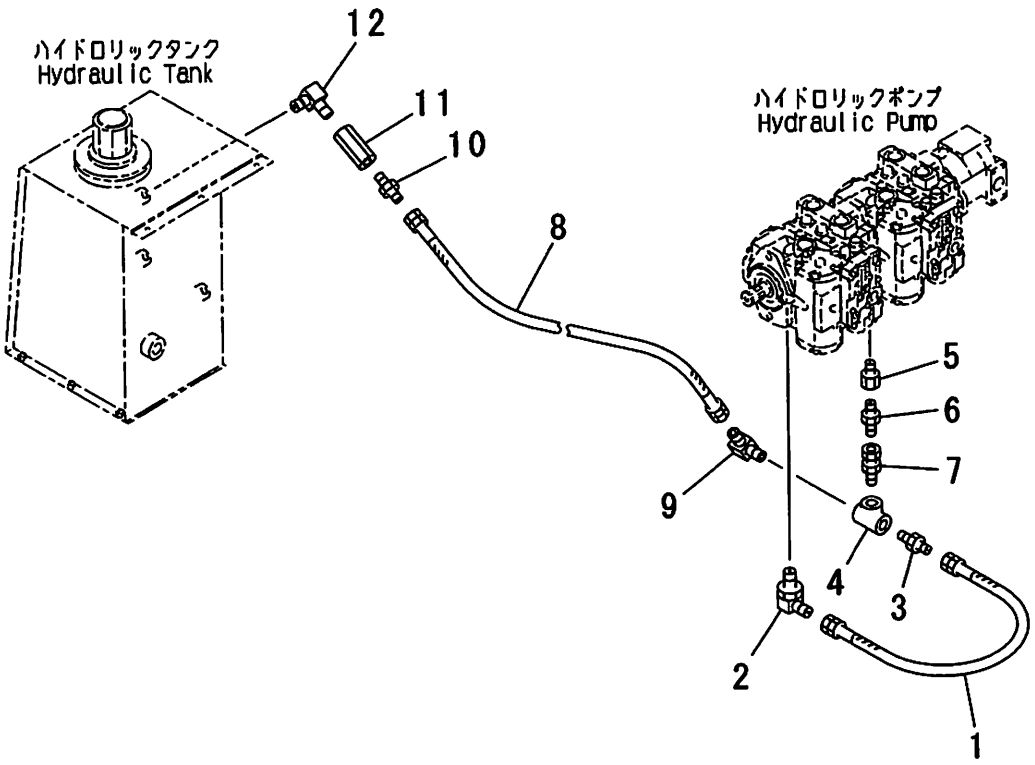

PV93397

FIG.506

INDEX	PART NO.	DESCRIPTION	Q'TY	SERIAL NO.
1	0-2220-01060	HOSE (1"X600)	1	60577 ~ 60650
2	0-4321-02110	ELBOW (UNF1·5/16XPT1)	1	60577 ~ 60650
	0-2040-03030	·O-RING (916)	1	60577 ~ 60650
3	0-4210-00610	NIPPLE (PT3/4XPF1)	1	60577 ~ 60650
4	0-4405-00606	TEE (PT3/4XPT3/4XPT3/4)	1	60577 ~ 60650
5	0-4121-02110	ADAPTER (UNF1·5/16XPT1)	1	60577 ~ 60650
	0-2040-03030	·O-RING (916)	1	60577 ~ 60650
6	0-4210-01006	NIPPLE (PT1XPF3/4)	1	60577 ~ 60650
7	0-4130-00606	ADAPTER (PT3/4XPF3/4)	1	60577 ~ 60650
8	0-2220-00482	HOSE (1/2"X820)	1	60577 ~ 60650
9	0-4300-00604	ELBOW (PT3/4XPF1/2)	1	60577 ~ 60650
10	0-4210-00404	NIPPLE (PT1/2XPF1/2)	1	60577 ~ 60650
11	1-25670-1220	CHECK VALVE (ICV04RC-35)	1	60577 ~ 60650
12	0-4301-00404	ELBOW (PT1/2XPT1/2)	1	60577 ~ 60650

FIG.551 HYDRAULIC OIL TANK

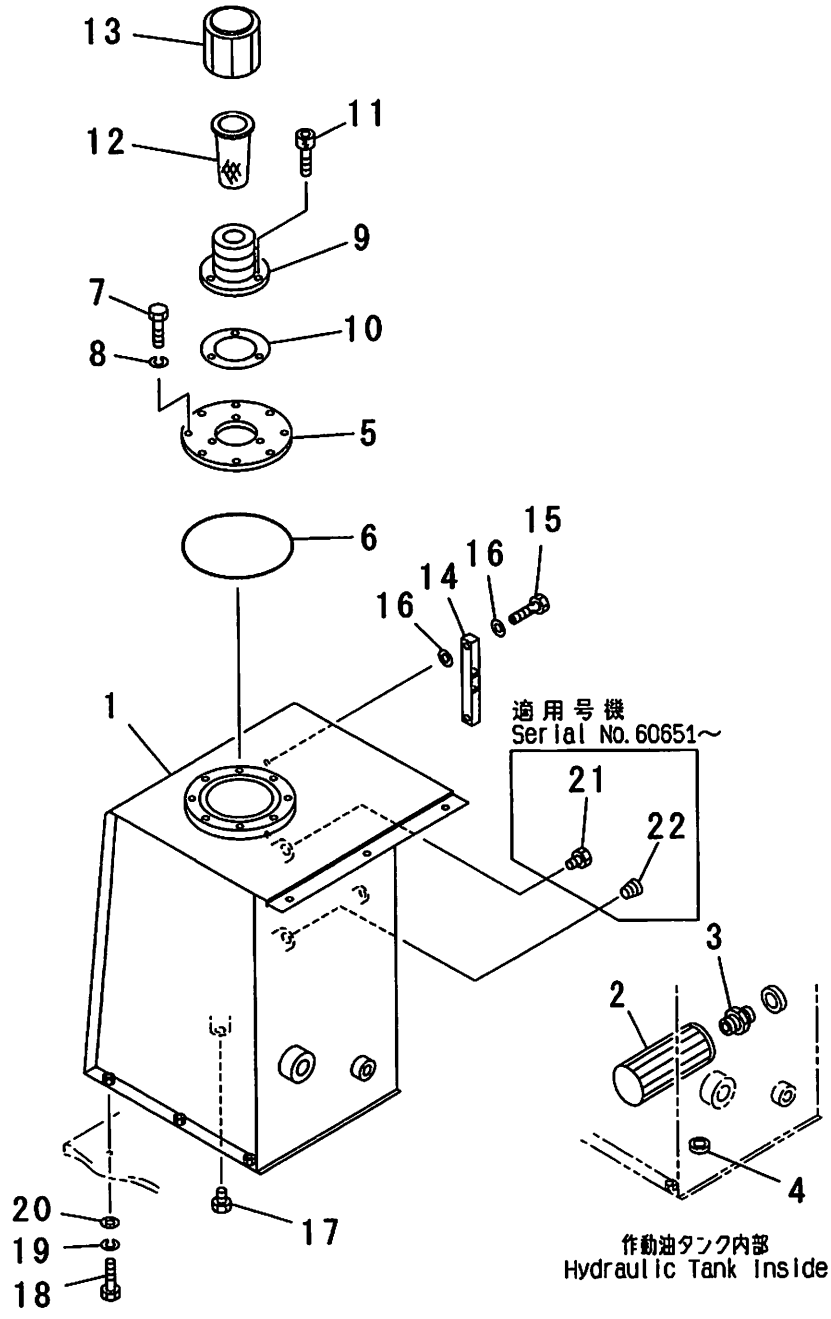

PV93372B

FIG.551

INDEX	PART NO.	DESCRIPTION	Q'TY	SERIAL NO.
	1-50660-0030	HYDRAULIC OIL TANK ASS'Y	1	60501 ~
1	1-50660-3110	·HYDRAULIC OIL TANK	1	60501 ~
2	1-11660-1230	·SUCTION FILTER (CT08W)	1	60501 ~
3	0-4212-01010	·NIPPLE (PT1XPT1)	1	60501 ~
4	1-11660-1250	·MAGNET	1	60501 ~
5	1-11660-1120	·COVER	1	60501 ~
6	1-16110-1130	·O-RING (G155)	1	60501 ~
7	0-1000-00816	·BOLT (M8X16)	8	60501 ~
8	0-1100-00820	·SPRING WASHER (M8)	8	60501 ~
9	1-11660-1140	·BREATHER	1	60501 ~
10	1-11660-1150	·GASKET	1	60501 ~
11	1-11660-1220	·BOLT (M6X16)	3	60501 ~
12	1-11660-1170	·STRAINER	1	60501 ~
13	1-11660-1160	·CAP	1	60501 ~
	1-11660-0020	·OIL LEVEL GAUGE ASS'Y	1	60501 ~
14	1-11660-1180	··GAUGE	1	60501 ~
15	1-11660-1190	··BOLT	2	60501 ~
16	1-11660-1210	··GASKET	4	60501 ~
17	0-4000-00400	·DRAIN PLUG (PT1/2)	1	60501 ~
18	0-1000-01025	BOLT (M10X25)	6	60501 ~
19	0-1100-01025	SPRING WASHER (M10)	6	60501 ~
20	0-1120-01020	PLANE WASHER (M10)	6	60501 ~
21	0-4000-00400	PLUG (PT1/2)	1	60651 ~
22	0-4010-00300	PLUG (PT3/8)	1	60651 ~

FIG.555 HYDRAULIC OIL FILTER (SERIAL NO. 60501-60576)

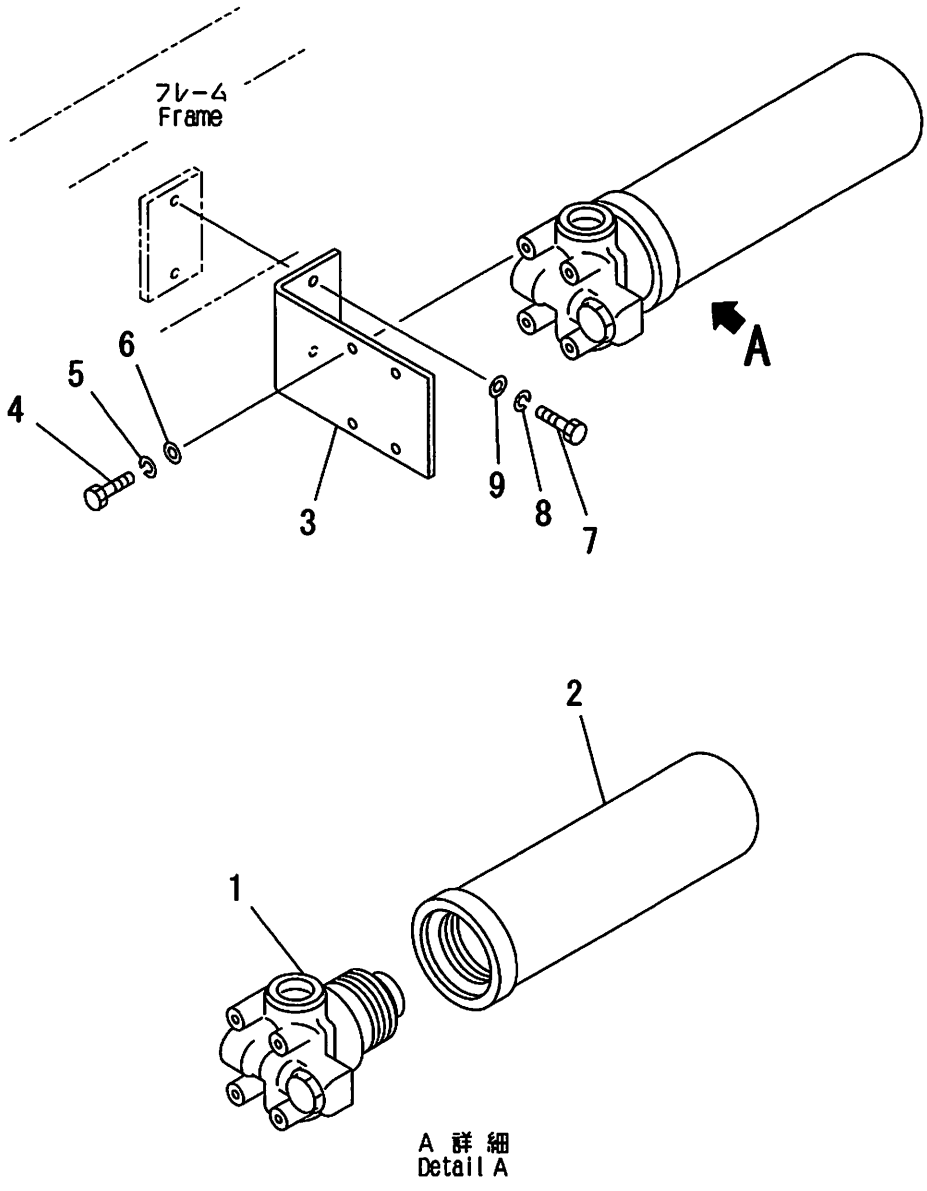

PV93374

FIG.555

INDEX	PART NO.	DESCRIPTION	Q'TY	SERIAL NO.
	1-31650-0010	OIL FILTER ASS'Y	1	60501 ~ 60576
1	1-31650-1110	•HEAD ASS'Y	1	60501 ~ 60576
2	1-31650-1120	•ELEMENT ASS'Y	1	60501 ~ 60576
3	1-50520-3810	BRACKET	1	60501 ~ 60576
4	0-1000-00820	BOLT (M8X20)	4	60501 ~ 60576
5	0-1100-00820	SPRING WASHER (M8)	4	60501 ~ 60576
6	0-1120-00816	PLANE WASHER (M8)	4	60501 ~ 60576
7	0-1000-01020	BOLT (M10X20)	2	60501 ~ 60576
8	0-1100-01025	SPRING WASHER (M10)	2	60501 ~ 60576
9	0-1120-01020	PLANE WASHER (M10)	2	60501 ~ 60576

FIG.555A HYDRAULIC OIL FILTER (SERIAL NO. 60577-)

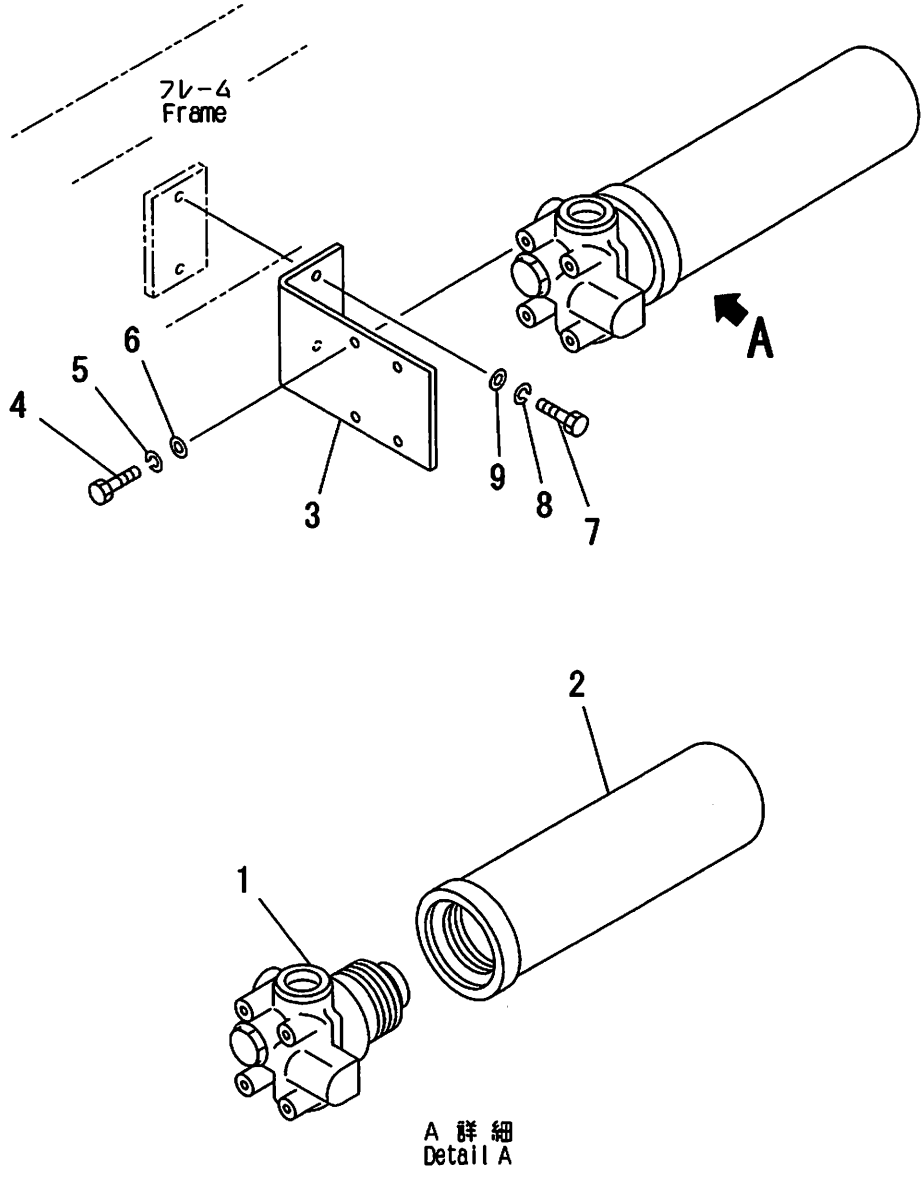

PV93602

FIG.555A

INDEX	PART NO.	DESCRIPTION	Q'TY	SERIAL NO.
	1-31650-0010	OIL FILTER ASS'Y	1	60577 ~
1	1-31650-1110	•HEAD ASS'Y	1	60577 ~
2	1-31650-1120	•ELEMENT ASS'Y	1	60577 ~
3	1-50520-3810	BRACKET	1	60577 ~
4	0-1000-00820	BOLT (M8X20)	4	60577 ~
5	0-1100-00820	SPRING WASHER (M8)	4	60577 ~
6	0-1120-00816	PLANE WASHER (M8)	4	60577 ~
7	0-1000-01020	BOLT (M10X20)	2	60577 ~
8	0-1100-01025	SPRING WASHER (M10)	2	60577 ~
9	0-1120-01020	PLANE WASHER (M10)	2	60577 ~

FIG.601 DUMP BODY RELATED PARTS

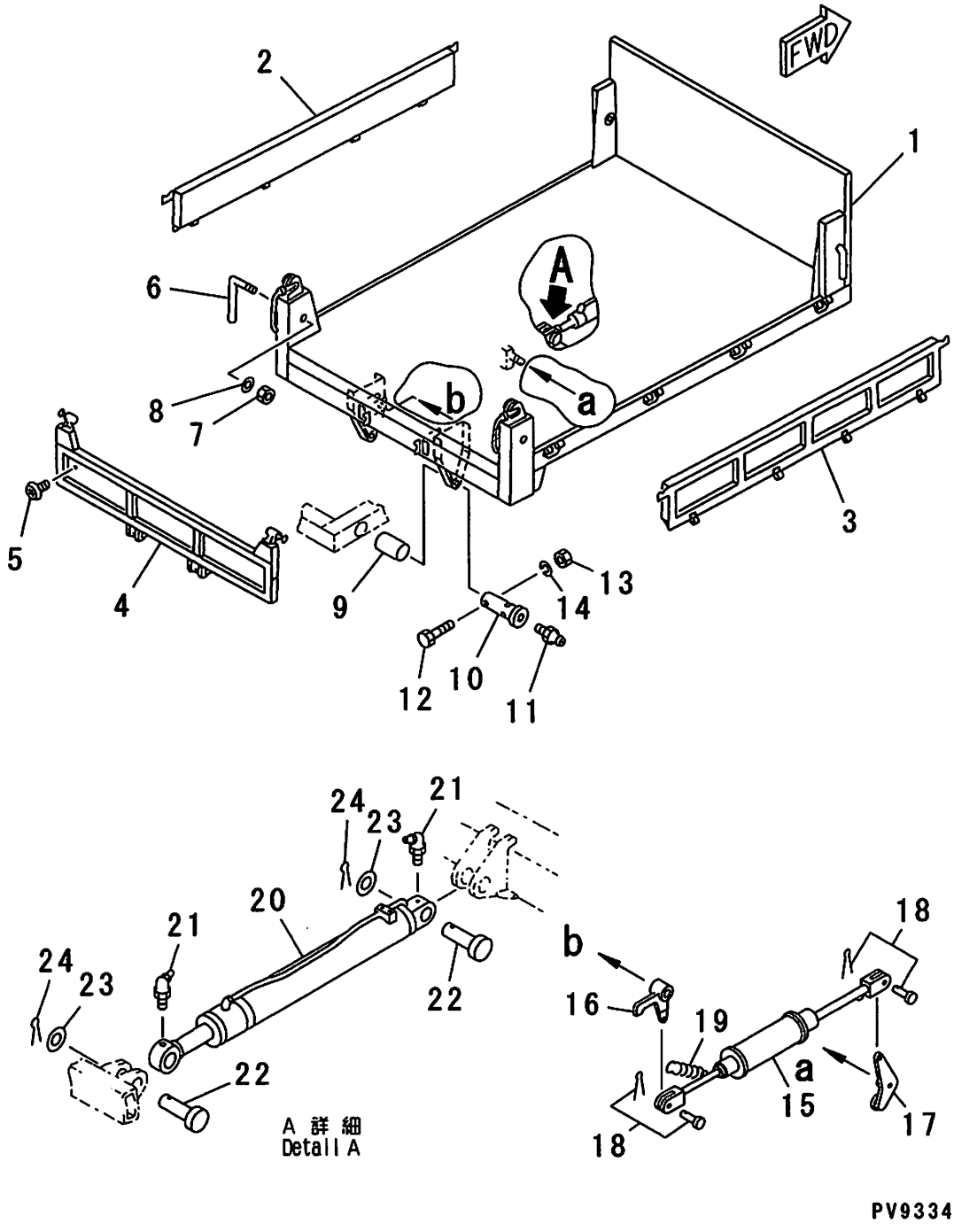

PV93342

FIG.601

INDEX	PART NO.	DESCRIPTION	Q'TY	SERIAL NO.
1	1-12710-1110	DUMP BODY	1	60501 ~
2	1-12710-1120	LEFT SIDE DOOR	1	60501 ~
3	1-12710-1130	RIGHT SIDE DOOR	1	60501 ~
4	1-12710-1140	REAR DOOR	1	60501 ~
5	1-11710-1150	REFLECTOR	2	60501 ~
6	1-12710-1170	LEVER	2	60501 ~
7	0-1220-01408	NUT (M14)	2	60501 ~
8	0-1120-01432	PLANE WASHER (M14)	2	60501 ~
9	1-12710-1360	BUSHING	2	60501 ~
10	1-57710-1310	HINGE PIN	2	60501 ~
11	0-3400-00100	GREASE NIPPLE	2	60501 ~
12	0-1000-31290	BOLT (M12X90)	2	60501 ~
13	0-1200-01210	NUT (M12)	2	60501 ~
14	0-1100-01230	SPRING WASHER (M12)	2	60501 ~
	1-12710-1400	LEFT SIDE CUSHION ASS'Y	1	60501 ~
	1-12710-1500	RIGHT SIDE CUSHION ASS'Y	1	60501 ~
15	1-12710-1440	•SPRING CASE ASS'Y	1	60501 ~
16	1-12710-1410	•HOOK	1	60501 ~
17	1-12710-1460	•LEFT SIDE ARM ASS'Y	1	60501 ~
	1-12710-1560	•RIGHT SIDE ARM ASS'Y	1	60501 ~
18	1-12710-1420	•PIN ASS'Y	2	60501 ~
19	1-12710-1430	•SPRING	1	60501 ~
20	1-12640-0010	DUMP CYLINDER ASS'Y	1	60501 ~
21	0-3400-00170	GREASE NIPPLE	2	60501 ~
22	1-12710-1320	CYLINDER PIN	2	60501 ~
23	1-12710-1330	WASHER	2	60501 ~
24	0-3220-05970	COTTER PIN (Φ 5.9X70)	2	60501 ~

FIG.701 ELECTRICAL SYSTEM (INSTRUMENT PANEL AND CONTROL BOX)
(SERIAL NO. 60501-60576)

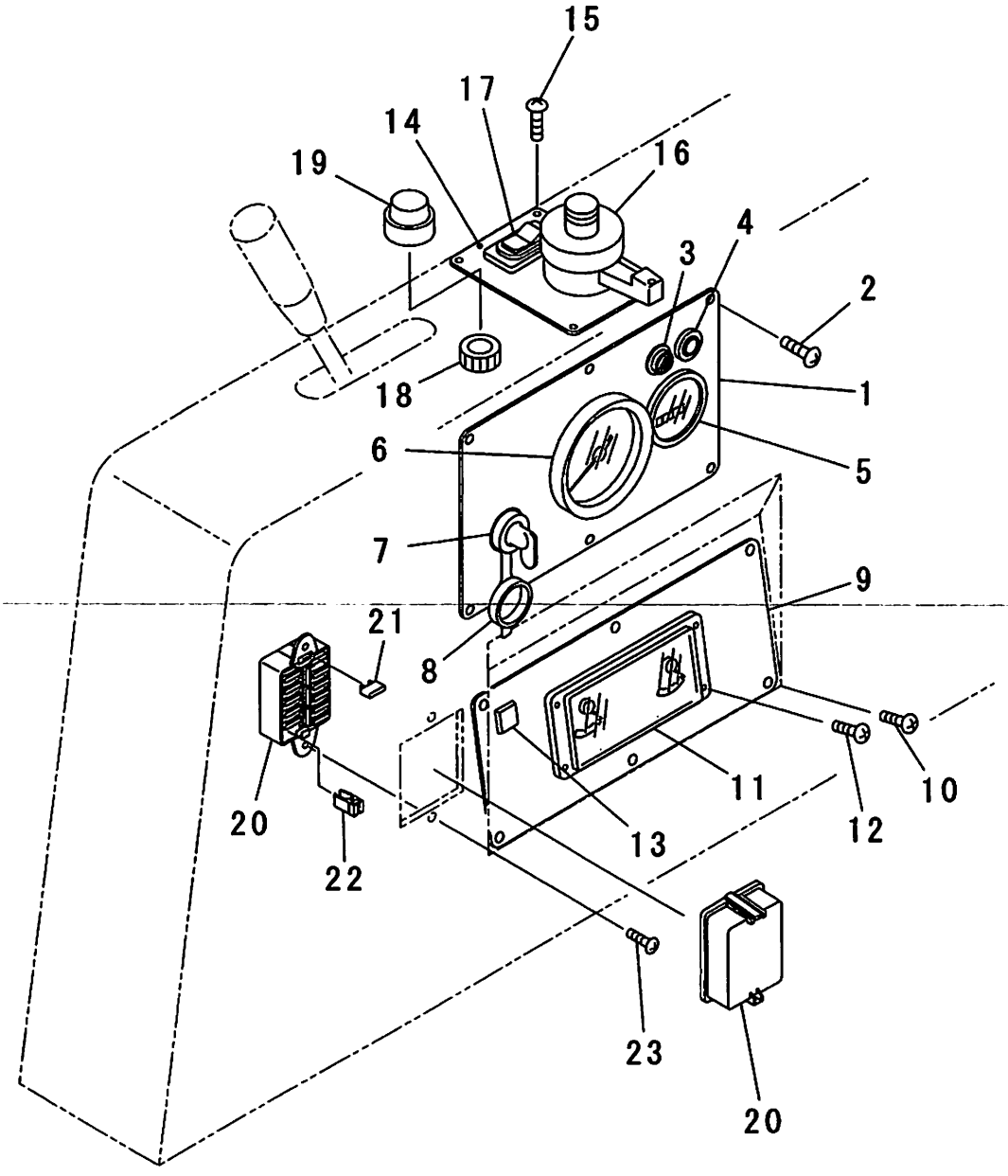

PV93376A

FIG.701

INDEX	PART NO.	DESCRIPTION	Q'TY	SERIAL NO.
1	1-50210-3110	INSTRUMENT PANEL	1	60501 ~ 60576
2	0-1320-00616	SCREW (M6X16)	6	60501 ~ 60576
3	1-50210-3160	SLOPE WARNING LAMP (RED)	1	60501 ~ 60576
4	0-2820-01208	GROMMET	1	60501 ~ 60576
5	0-5230-00012	HOUR METER	1	60501 ~ 60576
6	1-50210-1750	TACHOMETER	1	60501 ~ 60576
7	0-5400-00000	STARTING SWITCH (98271-00270)	1	60501 ~ 60576
8	1-11210-1140	STARTING SWITCH CAP	1	60501 ~ 60576
9	1-50210-3120	MONITOR PANEL	1	60501 ~ 60576
10	0-1320-00616	SCREW (M6X16)	6	60501 ~ 60576
11	1-50210-3210	MONITOR ASS'Y	1	60501 ~ 60576
12	0-1320-00416	SCREW (M4X16)	4	60501 ~ 60576
13	1-50210-3250	PREHEATING PILOT LAMP	1	60501 ~ 60576
14	1-50210-3130	SWITCH PANEL	1	60501 ~ 60576
15	0-1320-00512	SCREW (M5X12)	4	60501 ~ 60576
16	1-29210-1150	COMBINATION SWITCH	1	60501 ~ 60576
17	1-12210-1140	PARKING BRAKE SWITCH	1	60501 ~ 60576
18	1-39210-1350	H-L SPEED SELECTOR SWITCH	1	60501 ~ 60576
19	1-30120-1170	CAP	1	60501 ~ 60576
20	1-16210-1600	FUSE BOX ASS'Y	1	60501 ~ 60576
21	0-5060-00015	·BLADE FUSE (15A)	14	60501 ~ 60576
22	1-16210-1690	·FUSE HOLDER	1	60501 ~ 60576
23	0-1300-00616	SCREW (M6X16)	2	60501 ~ 60576

FIG.701A ELECTRICAL SYSTEM (INSTRUMENT PANEL AND CONTROL BOX)
(SERIAL NO. 60577-60650)

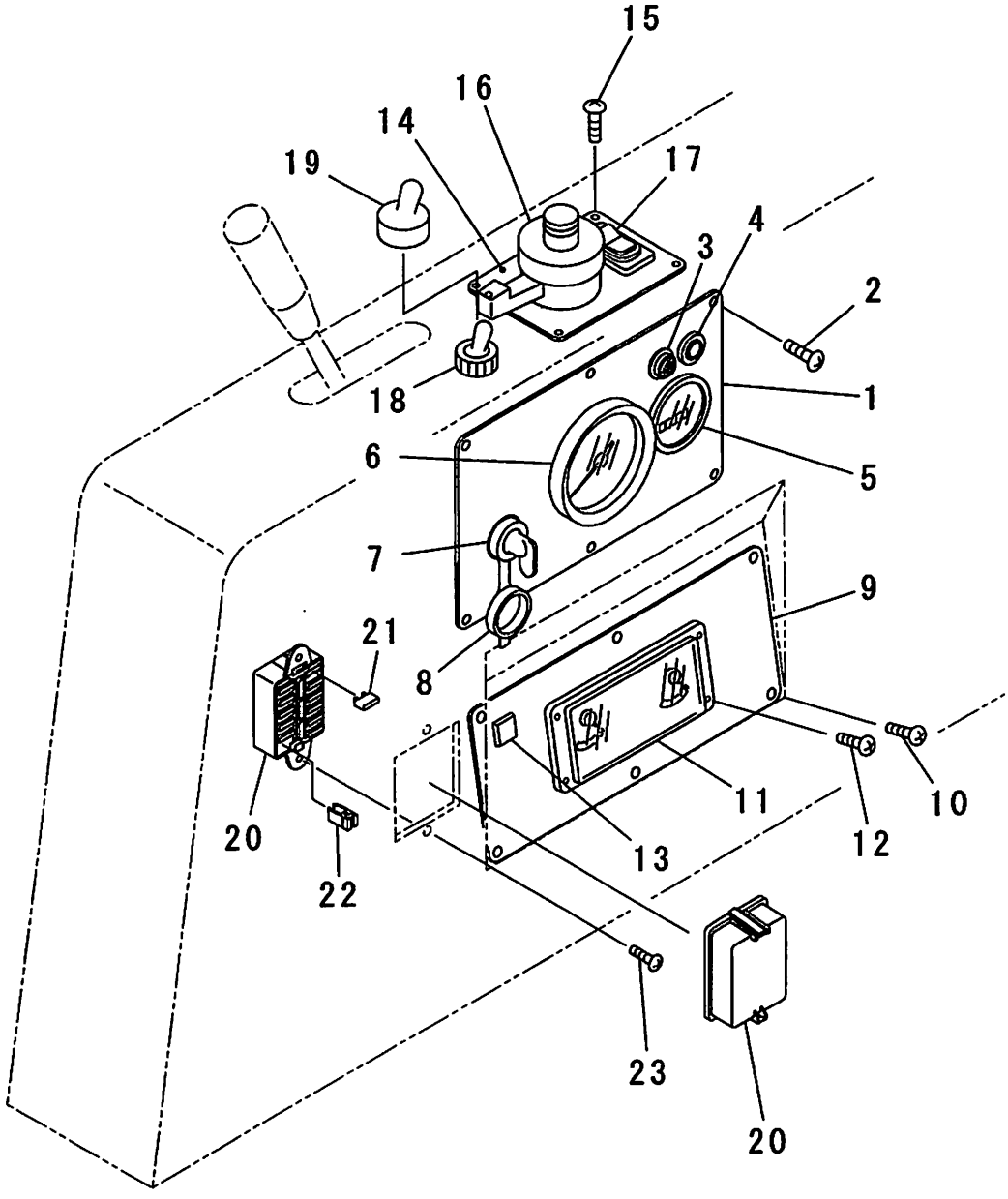

PV93400A

FIG.701A

INDEX	PART NO.	DESCRIPTION	Q'TY	SERIAL NO.
1	1-50210-3110	INSTRUMENT PANEL	1	60577 ~ 60650
2	0-1320-00616	SCREW (M6X16)	6	60577 ~ 60650
3	1-50210-3160	SLOPE WARNING LAMP (RED) (PL05RB04)	1	60577 ~ 60650
4	0-2820-01208	GROMMET	1	60577 ~ 60650
5	0-5230-00012	HOUR METER (30554-004)	1	60577 ~ 60650
6	1-50210-1750	TACHOMETER	1	60577 ~ 60650
7	0-5400-00000	STARTING SWITCH (98271-00270)	1	60577 ~ 60650
8	1-11210-1140	STARTING SWITCH CAP	1	60577 ~ 60650
9	1-50210-3120	MONITOR PANEL	1	60577 ~ 60650
10	0-1320-00616	SCREW (M6X16)	6	60577 ~ 60650
11	1-50210-3210	MONITOR ASS'Y	1	60577 ~ 60650
12	0-1320-00416	SCREW (M4X16)	4	60577 ~ 60650
13	1-50210-3250	PREHEATING PILOT LAMP (BL61-140-120)	1	60577 ~ 60650
14	1-50210-3130	SWITCH PANEL	1	60577 ~ 60650
15	0-1320-00512	SCREW (M5X12)	4	60577 ~ 60650
16	1-29210-1150	COMBINATION SWITCH (C1197-00-00)	1	60577 ~ 60650
17	1-12210-1140	PARKING BRAKE SWITCH (FE79A)	1	60577 ~ 60650
18	0-5480-00000	H-L SPEED SELECTOR SWITCH (S-301T)	1	60577 ~ 60650
19	1-12210-1160	CAP (AT-402)	1	60577 ~ 60650
20	1-16210-1600	FUSE BOX ASS'Y	1	60577 ~ 60650
21	0-5060-00015	·BLADE FUSE (15A)	14	60577 ~ 60650
22	1-16210-1690	·FUSE HOLDER	1	60577 ~ 60650
23	0-1300-00616	SCREW (M6X16)	2	60577 ~ 60650

FIG.701B ELECTRICAL SYSTEM (INSTRUMENT PANEL AND CONTROL BOX)
(SERIAL NO. 60651-)

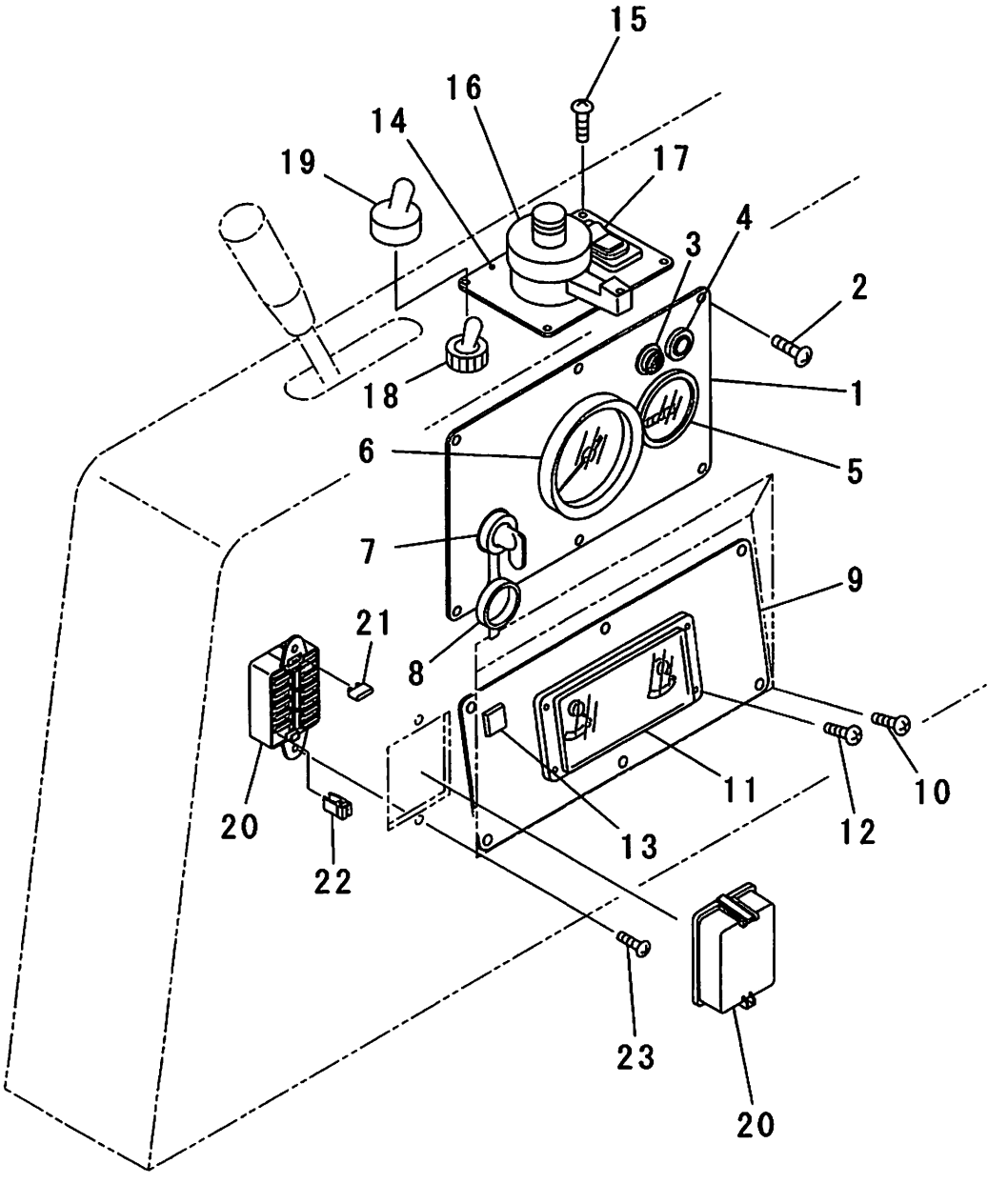

PV93608

FIG.701B

INDEX	PART NO.	DESCRIPTION	Q'TY	SERIAL NO.
1	1-50210-3110	INSTRUMENT PANEL	1	60651 ~
2	0-1320-00616	SCREW (M6X16)	6	60651 ~
3	1-50210-3160	SLOPE WARNING LAMP (RED) (PL05RB04)	1	60651 ~
4	0-2820-01208	GROMMET	1	60651 ~
5	0-5230-00012	HOUR METER (30554-004)	1	60651 ~
6	1-50210-1750	TACHOMETER	1	60651 ~
7	0-5400-00001	STARTING SWITCH (182310-0060)	1	60651 ~
8	1-11210-1140	STARTING SWITCH CAP	1	60651 ~
9	1-50210-3120	MONITOR PANEL	1	60651 ~
10	0-1320-00616	SCREW (M6X16)	6	60651 ~
11	1-50210-3210	MONITOR ASS'Y	1	60651 ~
12	0-1320-00416	SCREW (M4X16)	4	60651 ~
13	1-50210-3250	PREHEATING PILOT LAMP (BL61-140-120)	1	60651 ~
14	1-50210-3131	SWITCH PANEL	1	60651 ~
15	0-1320-00512	SCREW (M5X12)	4	60651 ~
16	1-29210-1150	COMBINATION SWITCH (C1197-00-00)	1	60651 ~
17	1-12210-1140	PARKING BRAKE SWITCH (FE79A)	1	60651 ~
18	0-5480-00000	H-L SPEED SELECTOR SWITCH (S-301T)	1	60651 ~
19	1-12210-1160	CAP (AT-402)	1	60651 ~
20	1-16210-1600	FUSE BOX ASS'Y	1	60651 ~
21	0-5060-00015	•BLADE FUSE (15A)	14	60651 ~
22	1-16210-1690	•FUSE HOLDER	1	60651 ~
23	0-1300-00616	SCREW (M6X16)	2	60651 ~

FIG.705 ELECTRICAL SYSTEM (RELAYS AND FUSE BOX)
(SERIAL NO. 60501-60650)

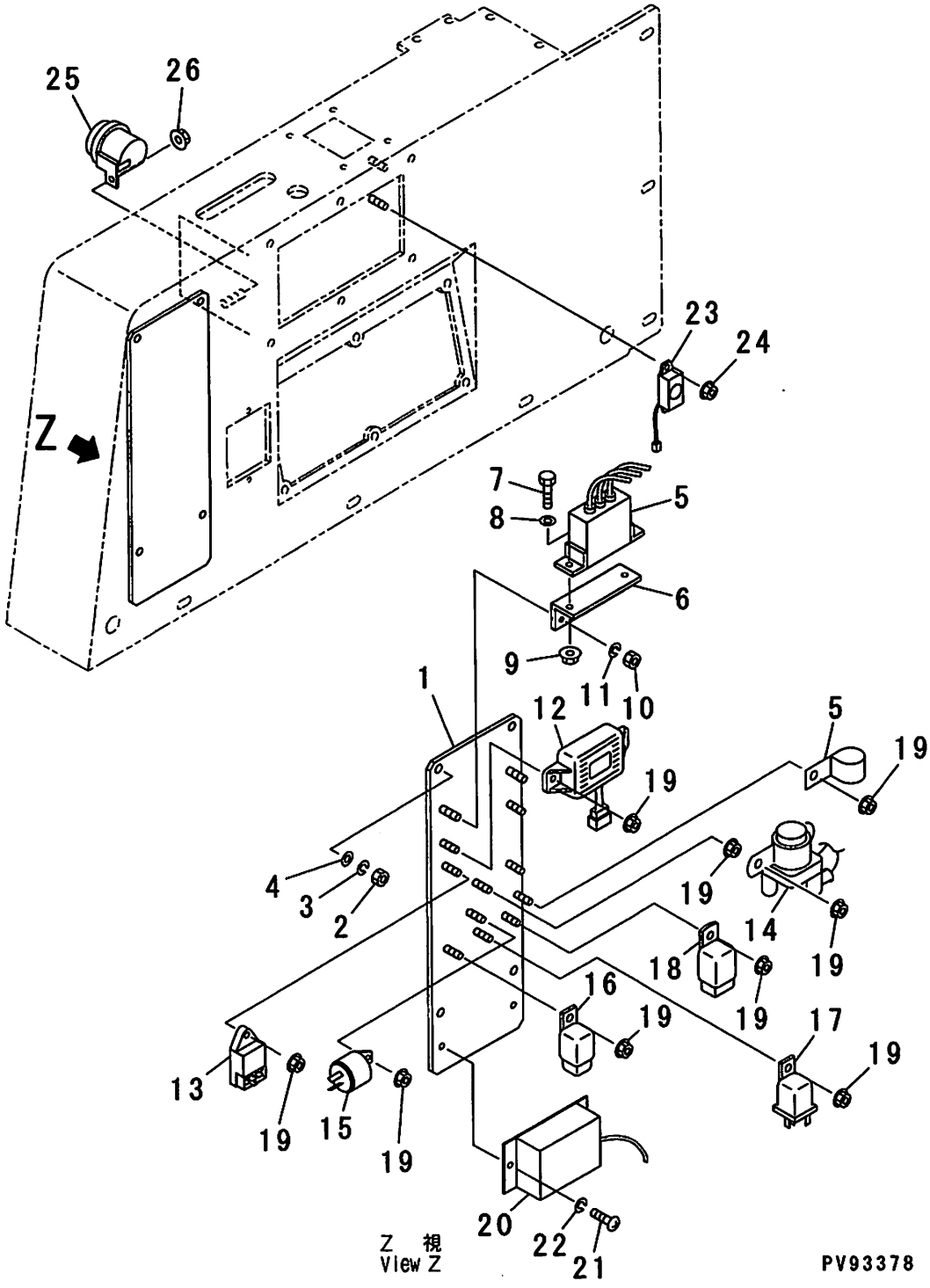

FIG.705

INDEX	PART NO.	DESCRIPTION	Q'TY	SERIAL NO.
1	1-50210-3510	PLATE	1	60501 ~ 60650
2	0-1200-00806	NUT (M8)	4	60501 ~ 60650
3	0-1100-00820	SPRING WASHER (M8)	4	60501 ~ 60650
4	0-1120-00816	PLANE WASHER (M8)	4	60501 ~ 60650
5	1-12210-1610	HST OIL TEMPERATURE UNIT	1	60501 ~ 60650
6	1-29210-1520	BRACKET	1	60501 ~ 60650
7	0-1000-00616	BOLT (M6X16)	2	60501 ~ 60650
8	0-1120-00616	PLANE WASHER (M6)	2	60501 ~ 60650
9	0-1260-00606	FLANGE NUT (M6)	2	60501 ~ 60650
10	0-1200-00806	NUT (M8)	4	60501 ~ 60650
11	0-1100-00820	SPRING WASHER (M8)	4	60501 ~ 60650
12	1-50210-3620	REGULATOR ASS'Y	1	60501 ~ 60650
13	1-50210-3630	GLOW TIMER	1	60501 ~ 60650
14	1-50210-3640	STARTER RELAY	1	60501 ~ 60650
15	1-50210-3650	FLASHER RELAY (HF-612)	1	60501 ~ 60650
16	1-50210-3660	PARKING BRAKE SAFETY RELAY (J04-C1R1)	1	60501 ~ 60650
17	1-50210-3670	RELAY (TK-1D MR5A040A1K)	1	60501 ~ 60650
18	1-50210-3680	ENGINE MAIN RELAY	1	60501 ~ 60650
19	0-1260-00606	FLANGE NUT (M6)	10	60501 ~ 60650
20	1-39210-1360	H-L SPEED SELECTOR UNIT	1	60501 ~ 60576
21	0-1300-00416	SCREW (M4X16)	2	60501 ~ 60576
22	0-1100-00410	SPRING WASHER (M4)	2	60501 ~ 60576
23	1-46210-1520	PARKING BRAKE BUZZER (EB2122)	1	60501 ~ 60650
24	0-1260-00404	FLANGE NUT (M4)	2	60501 ~ 60650
25	1-43210-1520	OVER-RUN BUZZER (BA319-11)	1	60501 ~ 60650
26	0-1260-00606	FLANGE NUT (M6)	1	60501 ~ 60650

FIG.705A ELECTRICAL SYSTEM (RELAYS AND FUSE BOX)
(SERIAL NO. 60651-)

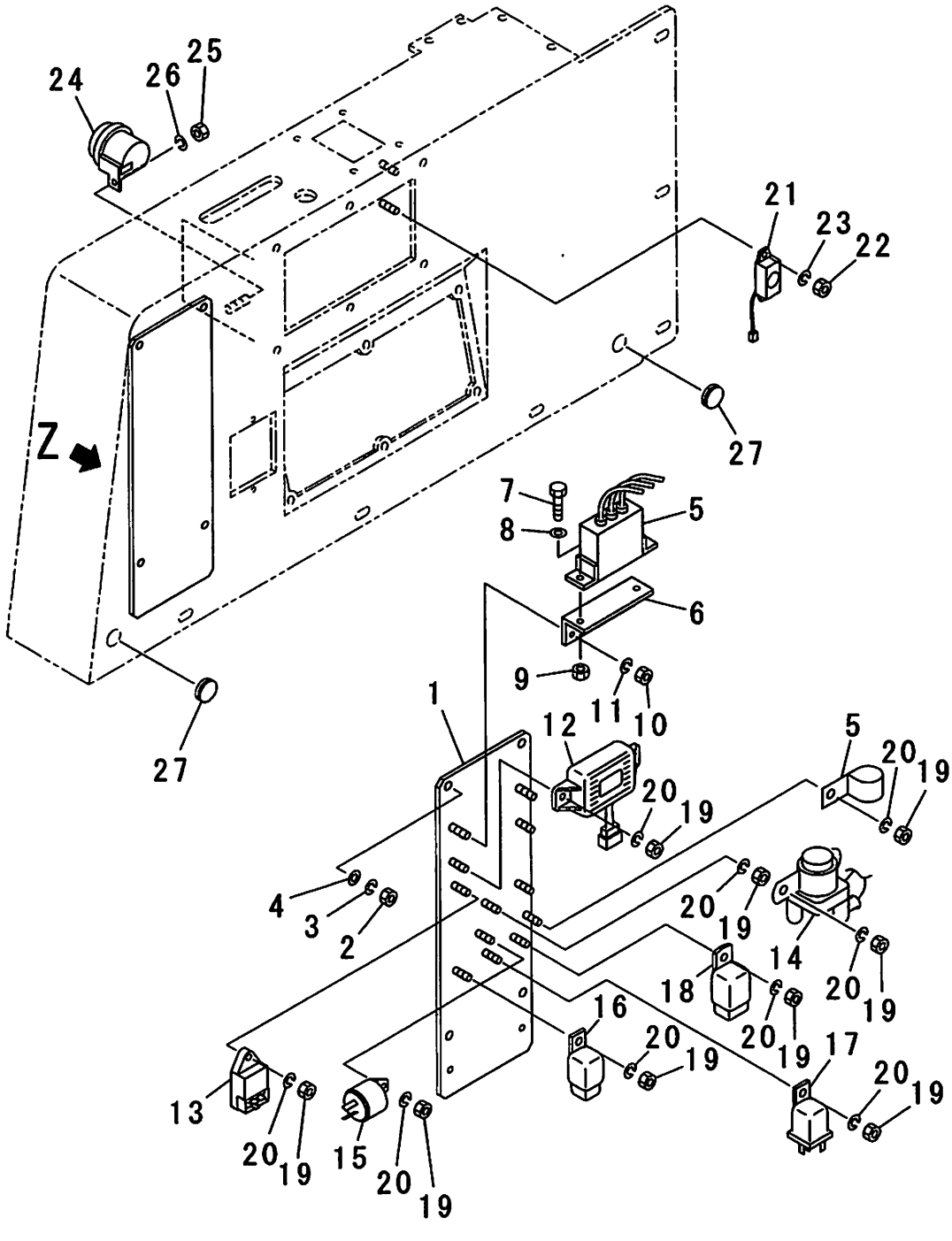

Z 視
View Z

PV93603

FIG.705A

INDEX	PART NO.	DESCRIPTION	Q'TY	SERIAL NO.
1	1-50210-3510	PLATE	1	60651 ~
2	0-1200-00806	NUT (M8)	4	60651 ~
3	0-1100-00820	SPRING WASHER (M8)	4	60651 ~
4	0-1120-00816	PLANE WASHER (M8)	4	60651 ~
5	1-12210-1610	HST OIL TEMPERATURE UNIT	1	60651 ~
6	1-29210-1520	BRACKET	1	60651 ~
7	0-1000-00616	BOLT (M6X16)	2	60651 ~
8	0-1120-00616	PLANE WASHER (M6)	2	60651 ~
9	0-1200-00605	NUT (M6)	2	60651 ~
10	0-1200-00806	NUT (M8)	4	60651 ~
11	0-1100-00820	SPRING WASHER (M8)	4	60651 ~
12	1-50210-3620	REGULATOR ASS'Y	1	60651 ~
13	1-50210-3630	GLOW TIMER	1	60651 ~
14	1-50210-3640	STARTER RELAY	1	60651 ~
15	1-50210-3650	FLASHER RELAY (HF-612)	1	60651 ~
16	1-50210-3660	PARKING BRAKE SAFETY RELAY (J04-C1R1)	1	60651 ~
17	1-50210-3670	RELAY (TK-1D MR5A040A1K)	1	60651 ~
18	1-50210-3680	ENGINE MAIN RELAY	1	60651 ~
19	0-1200-00605	NUT (M6)	10	60651 ~
20	0-1100-00615	SPRING WASHER (M6)	10	60651 ~
21	1-46210-1520	PARKING BRAKE BUZZER (EB2122)	1	60651 ~
22	0-1200-00403	NUT (M4)	2	60651 ~
23	0-1100-00410	SPRING WASHER (M4)	2	60651 ~
24	1-43210-1520	OVER-RUN BUZZER (BA319-11)	1	60651 ~
25	0-1200-00605	NUT (M6)	1	60651 ~
26	0-1100-00615	SPRING WASHER (M6)	1	60651 ~
27	NK0800-25030	GROMMET	2	60651 ~

FIG.711 ELECTRICAL SYSTEM (1/4) (WIRING HARNESS AND LAMPS)
(SERIAL NO. 60501-60650)

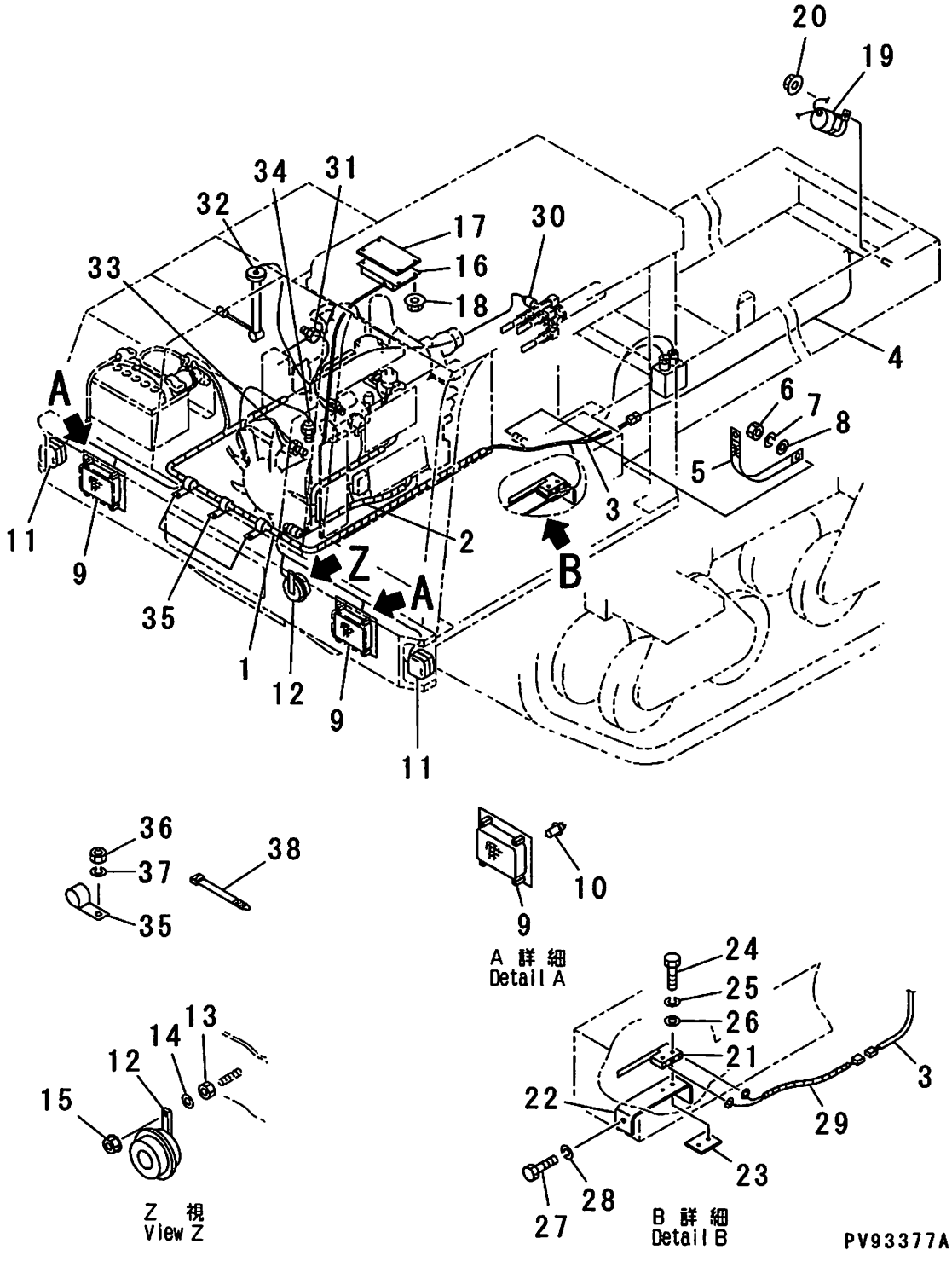

FIG.711

INDEX	PART NO.	DESCRIPTION	Q'TY	SERIAL NO.
1	1-50210-3410	WIRING HARNESS (D208R029)	1	60501 ~ 60650
2	1-50210-3420	WIRING HARNESS (D208R030)	1	60501 ~ 60650
3	1-50210-3430	WIRING HARNESS (D208R031)	1	60501 ~ 60650
4	1-50210-3440	WIRING HARNESS (D208R032)	1	60501 ~ 60650
5	1-50210-1420	GROUND CONNECTION CABLE	1	60501 ~ 60650
6	0-1200-01008	NUT (M10)	1	60501 ~ 60650
7	0-1100-01025	SPRING WASHER (M10)	1	60501 ~ 60650
8	0-1120-01020	PLANE WASHER (M10)	1	60501 ~ 60650
9	1-50210-0010	HALOGEN HEAD LAMP ASS'Y	2	60501 ~ 60650
10	1-50210-1830	•HALOGEN BULB (12V, 60/55W)	1	60501 ~ 60650
11	1-50210-0020	TURN SIGNAL LAMP ASS'Y	2	60501 ~ 60650
12	0-5600-01200	HORN	1	60501 ~ 60650
13	0-1200-00806	NUT (M8)	1	60501 ~ 60650
14	0-1120-00816	PLANE WASHER (M8)	1	60501 ~ 60650
15	0-1260-00808	FLANGE NUT (M8)	1	60501 ~ 60650
16	1-50210-3150	SLOPE ALARM UNIT	1	60501 ~ 60650
17	1-18210-1521	CUSHON	1	60501 ~ 60650
18	0-1260-00606	FLANGE NUT (M6)	4	60501 ~ 60650
19	1-28210-1520	BACK-UP BUZZER (BA-47)	1	60501 ~ 60650
20	0-1260-00808	FLANGE NUT (M8)	1	60501 ~ 60650
21	1-12210-1460	BACK-UP BUZZER SWITCH (Z-15HW24-B)	1	60501 ~ 60650
22	1-12210-1470	BRACKET (WELDED)	1	60501 ~ 60650
23	1-12210-1480	PLATE	1	60501 ~ 60650
24	0-1000-00430	BOLT (M4X30)	2	60501 ~ 60650
25	0-1100-00410	SPRING WASHER (M4)	2	60501 ~ 60650
26	0-1130-00408	PLANE WASHER (M4)	2	60501 ~ 60650
27	0-1000-00820	BOLT (M8X20)	1	60501 ~ 60650
28	0-1100-00820	SPRING WASHER (M8)	1	60501 ~ 60650
29	1-12210-1490	WIRING HARNESS	1	60501 ~ 60650
30	1-29210-1550	HST OIL PRESSURE SWITCH (20PS757-3)	1	60501 ~ 60650
31	1-29210-1510	HST OIL TEMPERATURE SENSOR	1	60501 ~ 60650
32	1-50210-3570	FUEL LEVEL SENSOR	1	60501 ~ 60650
33	1-50210-3580	ENGINE OIL PRESSURE SWITCH	1	60501 ~ 60650
34	1-50210-3590	ENGINE WATER TEMP. SENSOR (51400-KA1200)	1	60501 ~ 60650
35	0-2720-01206	CLIP (SMALL)	AR	60501 ~ 60650
35	0-2720-02506	CLIP (LARGE)	AR	60501 ~ 60650
36	0-1200-00605	NUT (M6)	AR	60501 ~ 60650
37	0-1100-00615	SPRING WASHER (M6)	AR	60501 ~ 60650

FIG.711

INDEX	PART NO.	DESCRIPTION	Q'TY	SERIAL NO.
38	0-2800-00202	STRAP BAND	AR	60501 ~ 60650
	0-2800-00383	STRAP BAND	AR	60501 ~ 60650

FIG.711A ELECTRICAL SYSTEM (1/4) (WIRING HARNESS AND LAMPS)
(SERIAL NO. 60651-)

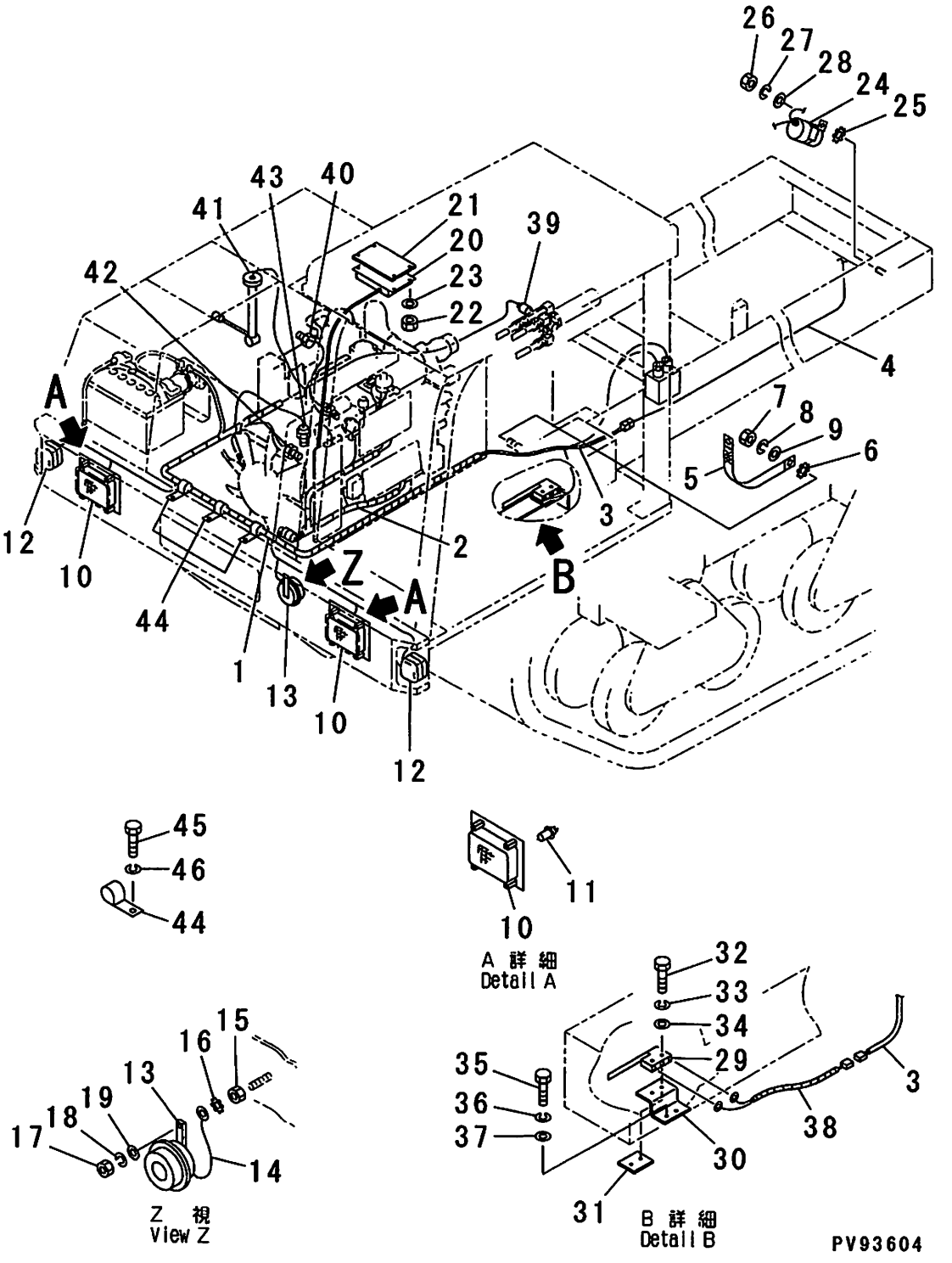

FIG.711A

INDEX	PART NO.	DESCRIPTION	Q'TY	SERIAL NO.
1	1-50210-3410	WIRING HARNESS (D208R029)	1	60651 ~
2	1-50210-3420	WIRING HARNESS (D208R030)	1	60651 ~
3	1-50210-3430	WIRING HARNESS (D208R031)	1	60651 ~
4	1-50210-3440	WIRING HARNESS (D208R032)	1	60651 ~
5	NK905-00140	GROUND CONNECTION CABLE	1	60651 ~
6	0-1150-01010	ロックWASHER (M10)	1	60651 ~
7	0-1200-01008	NUT (M10)	1	60651 ~
8	0-1100-01025	SPRING WASHER (M10)	1	60651 ~
9	0-1120-01020	PLANE WASHER (M10)	1	60651 ~
10	1-50210-0010	HALOGEN HEAD LAMP ASS'Y	2	60651 ~
11	1-50210-1830	·HALOGEN BULB (12V, 60/55W)	1	60651 ~
12	1-50210-0020	TURN SIGNAL LAMP ASS'Y	2	60651 ~
13	0-5600-01200	HORN	1	60651 ~
14	NKS012-01628	WIRING HARNESS	1	60651 ~
15	0-1200-00806	NUT (M8)	1	60651 ~
16	0-1150-00808	LOCK WASHER (M8)	1	60651 ~
17	0-1200-00806	NUT (M8)	1	60651 ~
18	0-1100-00820	SPRING WASHER (M8)	1	60651 ~
19	0-1120-00816	PLANE WASHER (M8)	1	60651 ~
20	1-50210-3150	SLOPE ALARM UNIT	1	60651 ~
21	1-18210-1521	CUSHON	1	60651 ~
22	NK0294-06000-a	U-NUT (M6)	4	60651 ~
23	0-1120-00616	PLANE WASHER (M6)	4	60651 ~
24	1-28210-1520	BACK-UP BUZZER	1	60651 ~
25	0-1150-00808	LOCK WASHER (M8)	1	60651 ~
26	0-1200-00806	NUT (M8)	1	60651 ~
27	0-1100-00820	SPRING WASHER (M8)	1	60651 ~
28	0-1120-00816	PLANE WASHER (M8)	1	60651 ~
29	NKS012-01611	BACK-UP BUZZER SWITCH	1	60651 ~
30	NKS012-01657	BRACKET	1	60651 ~
31	1-12210-1480	PLATE	1	60651 ~
32	0-1000-00420	BOLT (M4X20)	2	60651 ~
33	0-1100-00410	SPRING WASHER (M4)	2	60651 ~
34	0-1130-00408	PLANE WASHER (M4)	2	60651 ~
35	0-1000-00620	BOLT (M6X20)	2	60651 ~
36	0-1100-00615	SPRING WASHER (M6)	2	60651 ~
37	0-1120-00616	PLANE WASHER (M6)	2	60651 ~
38	1-12210-1490	WIRING HARNESS	1	60651 ~
39	1-29210-1550	HST OIL PRESSURE SWITCH (20PS757-3)	1	60651 ~
40	1-29210-1510	HST OIL TEMPERATURE SENSOR	1	60651 ~

FIG.711A

INDEX	PART NO.	DESCRIPTION	Q'TY	SERIAL NO.
41	1-50210-3570	FUEL LEVEL SENSOR	1	60651 ~
42	1-50210-3590	ENGINE WATER TEMP. SENSOR (51400-KA1200)	1	60651 ~
43	1-50210-3580	ENGINE OIL PRESSURE SWITCH	1	60651 ~
44	0-2720-00606	CLIP (φ 6)	4	60651 ~
	0-2720-01206	CLIP (φ 12)	5	60651 ~
	0-2720-01506	CLIP (φ 15)	1	60651 ~
	0-2720-01806	CLIP (φ 18)	2	60651 ~
	0-2720-02206	CLIP (φ 22)	5	60651 ~
	0-2720-03006	CLIP (φ 30)	1	60651 ~
45	0-1000-00616	BOLT (M6X16)	18	60651 ~
46	0-1100-00615	SPRING WASHER (M6)	18	60651 ~

FIG.712 ELECTRICAL SYSTEM (2/4) (CHASSIS WIRING DIAGRAM)

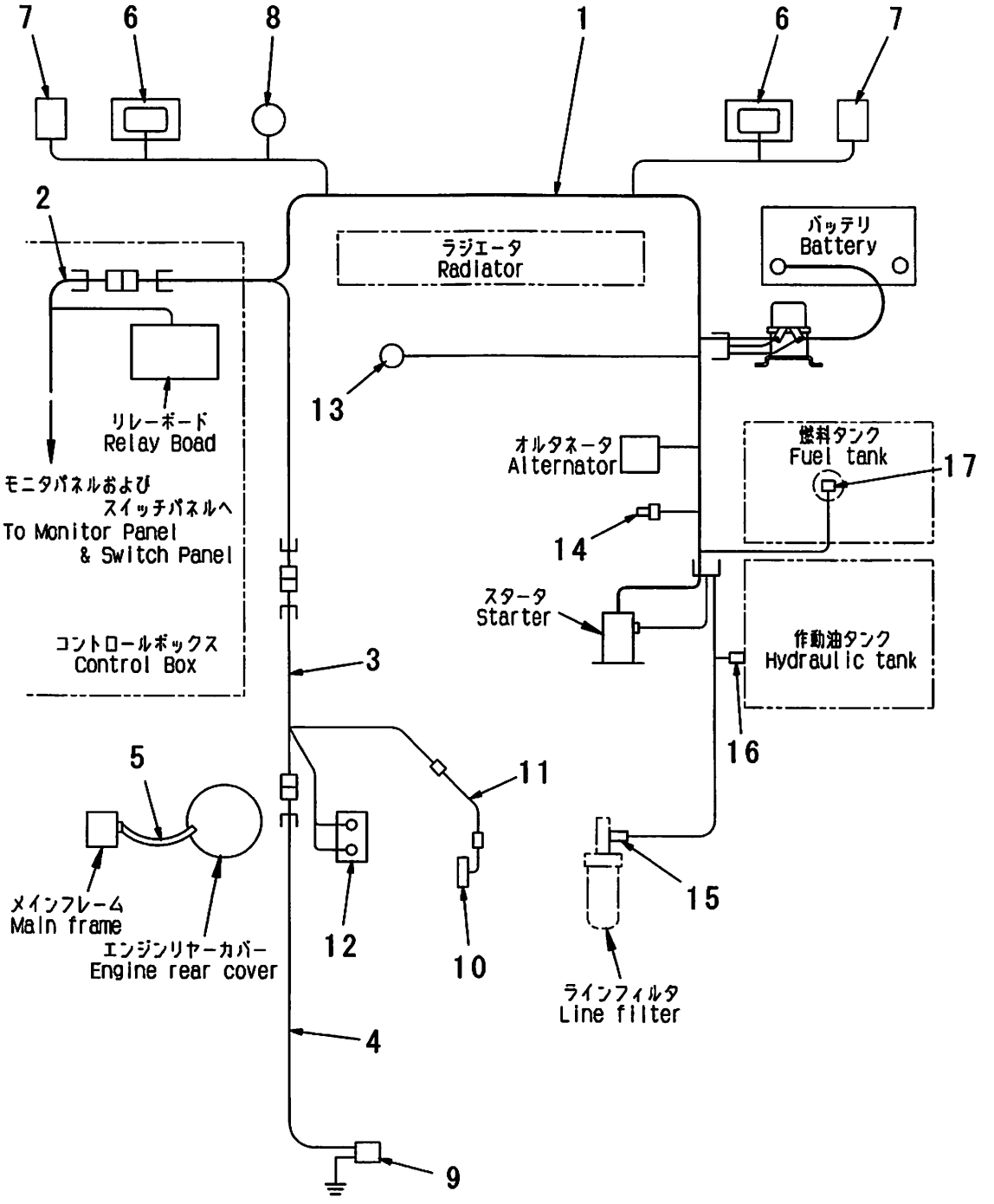

FIG.712

INDEX	PART NO.	DESCRIPTION	Q'TY	SERIAL NO.
1	1-50210-3410	WIRING HARNESS (D208R029)	1	60501 ~
2	1-50210-3420	WIRING HARNESS (D208R030)	1	60501 ~
3	1-50210-3430	WIRING HARNESS (D208R031)	1	60501 ~
4	1-50210-3440	WIRING HARNESS (D208R032)	1	60501 ~
5	1-50210-1420	GROUND CONNECTION CABLE	1	60501 ~ 60650
	NK905-00140	GROUND CONNECTION CABLE	1	60651 ~
6	1-50210-0010	HALOGEN HEAD LAMP ASS'Y	2	60501 ~
7	1-50210-0020	TURN SIGNAL LAMP ASS'Y	2	60501 ~
8	0-5600-01200	HORN	1	60501 ~
9	1-50210-3520	BACK-UP BUZZER	1	60501 ~
10	1-50210-3530	BACK-UP BUZZER SWITCH	1	60501 ~
11	1-12210-1490	WIRING HARNESS	1	60501 ~
12	1-50620-0030	SOLENOID VALVE ASS'Y	1	60501 ~
13	1-50210-3590	ENGINE WATER TEMP. SENSOR (51400-KA1200)	1	60501 ~
14	1-50210-3580	ENGINE OIL PRESSURE SWITCH	1	60501 ~
15	1-29210-1550	HST OIL PRESSURE SWITCH (20PS757-3)	1	60501 ~
16	1-29210-1510	HST OIL TEMPERATURE SENSOR	1	60501 ~
17	1-50210-3570	FUEL LEVEL SENSOR	1	60501 ~

FIG.715 ELECTRICAL SYSTEM (3/4) (BATTERY AND BATTERY RELAY)
(SERIAL NO. 60501-60650)

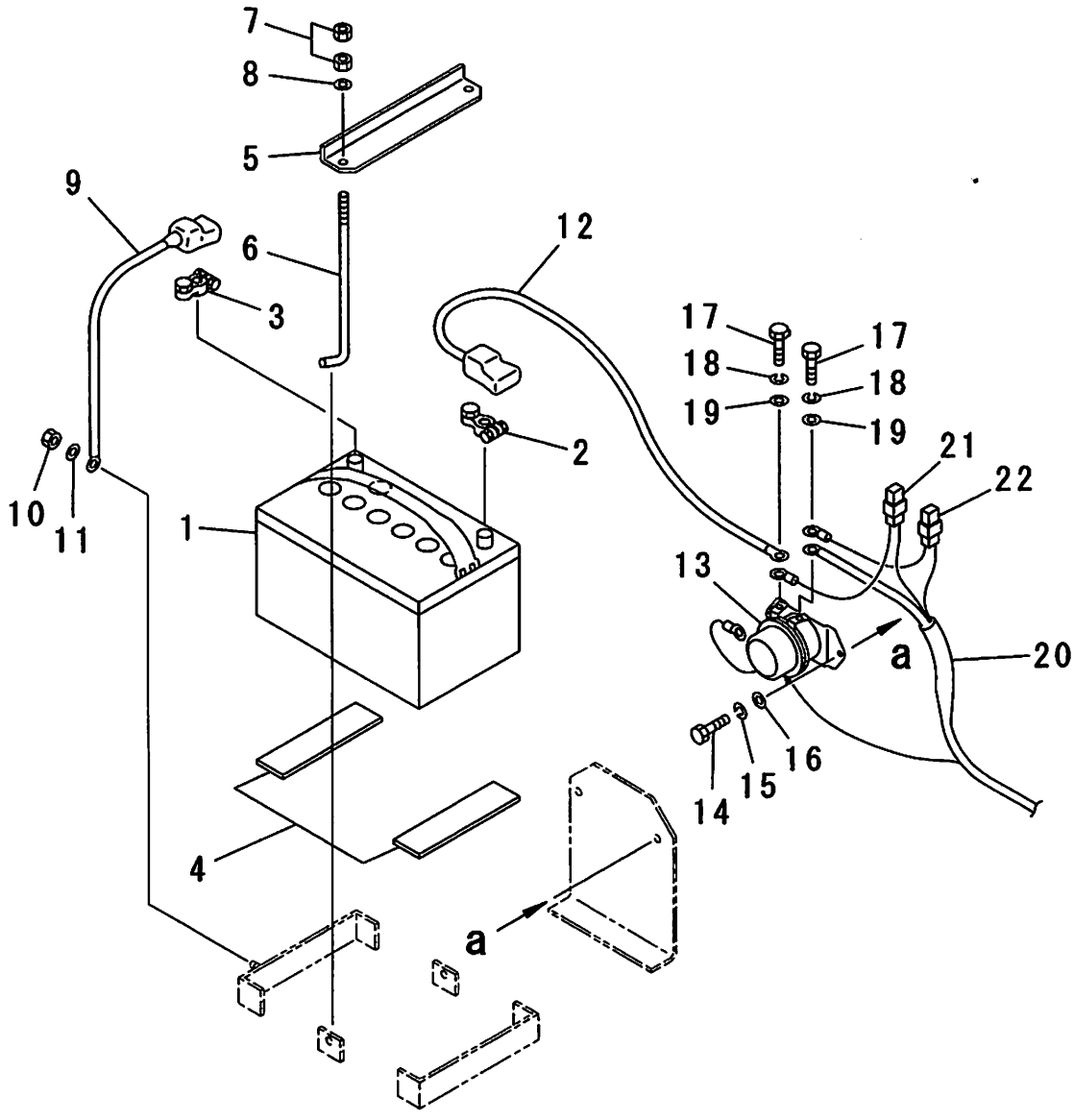

PV93379

FIG.715

INDEX	PART NO.	DESCRIPTION	Q'TY	SERIAL NO.
1	0-5000-01002	BATTERY (105D31R)	1	60501 ~ 60650
2	0-5010-00000	•TERMINAL (+)	2	60501 ~ 60650
3	0-5011-00000	•TERMINAL (-)	2	60501 ~ 60650
4	1-50210-3310	BOARD	2	60501 ~ 60650
5	1-50210-3320	BATTERY HOLDER	1	60501 ~ 60650
6	1-30210-2730	ROD	2	60501 ~ 60650
7	0-1200-00806	NUT (M8)	4	60501 ~ 60650
8	0-1120-00816	PLANE WASHER (M8)	2	60501 ~ 60650
9	1-50210-3460	GROUND CONNECTION CABLE (D408R034)	1	60501 ~ 60650
10	0-1200-01008	NUT (M10)	1	60501 ~ 60650
11	0-1110-01020	PLANE WASHER (M10)	1	60501 ~ 60650
12	1-50210-3450	BATTERY CABLE (D408R033)	1	60501 ~ 60650
13	1-50210-3350	BATTERY RELAY	1	60501 ~ 60650
14	0-1000-00830	BOLT (M8X30)	2	60501 ~ 60650
15	0-1100-00820	SPRING WASHER (M8)	2	60501 ~ 60650
16	0-1120-00816	PLANE WASHER (M8)	2	60501 ~ 60650
17	0-1000-00830	BOLT (M8X30)	2	60501 ~ 60650
18	0-1100-00820	SPRING WASHER (M8)	2	60501 ~ 60650
19	0-1120-00816	PLANE WASHER (M8)	2	60501 ~ 60650
20	1-50210-3410	WIRING HARNESS (D208R029)	1	60501 ~ 60650
21	1-50210-3910	•SLOW BLOW FUSE (75A)	1	60501 ~ 60650
22	1-50210-3920	•SLOW BLOW FUSE (65A)	1	60501 ~ 60650

FIG.715A ELECTRICAL SYSTEM (3/4) (BATTERY AND BATTERY RELAY)
(SERIAL NO. 60651-)

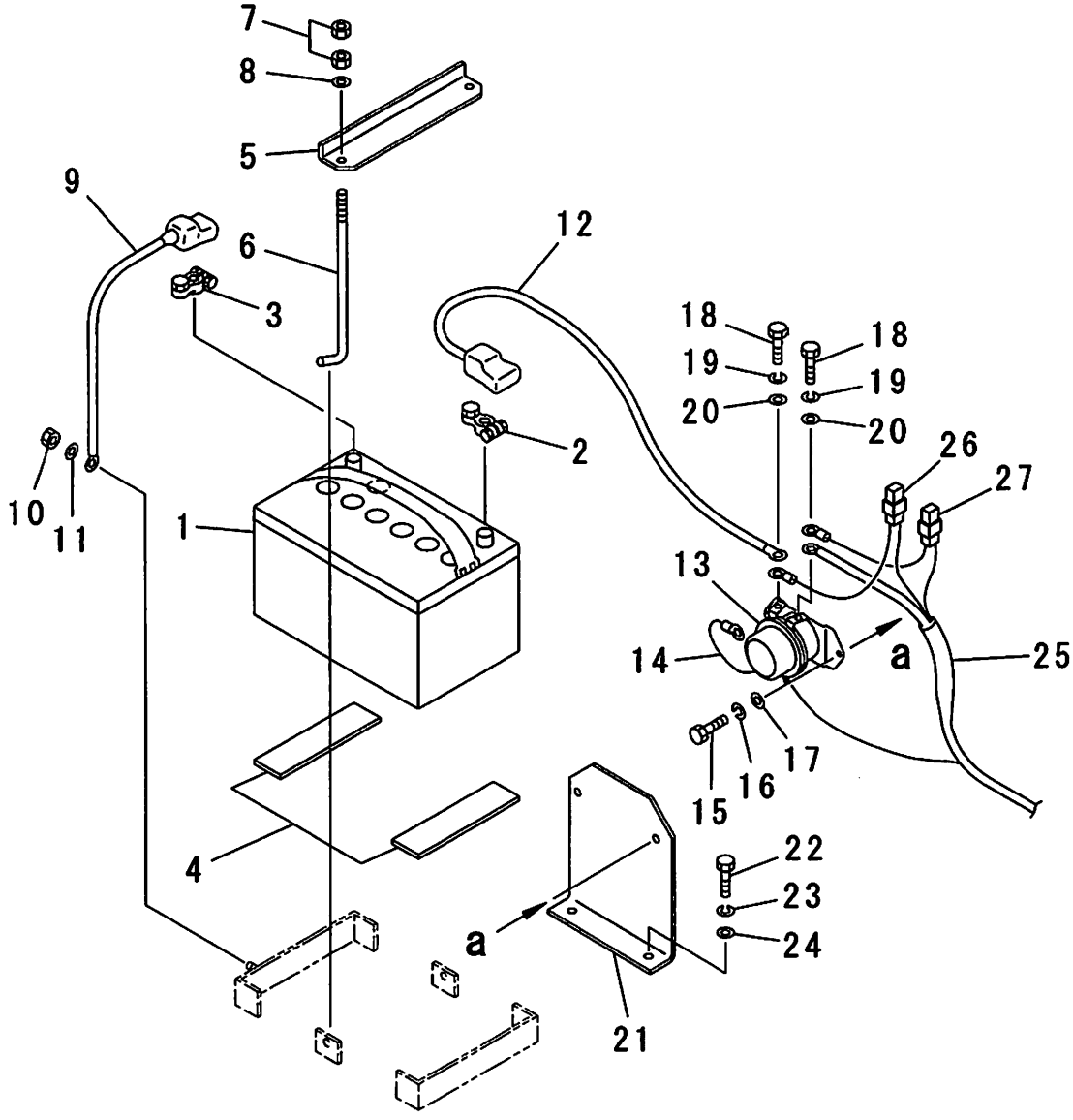

PV93606

FIG.715A

INDEX	PART NO.	DESCRIPTION	Q'TY	SERIAL NO.
1	0-5000-01002	BATTERY (105D31R)	1	60651 ~
2	0-5010-00000	•TERMINAL (+)	2	60651 ~
3	0-5011-00000	•TERMINAL (-)	2	60651 ~
4	1-50210-3310	BOARD	2	60651 ~
5	1-50210-3320	BATTERY HOLDER	1	60651 ~
6	1-30210-2730	ROD	2	60651 ~
7	0-1200-00806	NUT (M8)	4	60651 ~
8	0-1120-00816	PLANE WASHER (M8)	2	60651 ~
9	NKS012-01626	GROUND CONNECTION CABLE	1	60651 ~
10	0-1200-01008	NUT (M10)	1	60651 ~
11	0-1110-01020	PLANE WASHER (M10)	1	60651 ~
12	NKS012-01625	BATTERY CABLE	1	60651 ~
13	1-50210-3350	BATTERY RELAY	1	60651 ~
14	NKS012-01627	WIRING HARNESS	1	60651 ~
15	0-1000-00830	BOLT (M8X30)	2	60651 ~
16	0-1100-00820	SPRING WASHER (M8)	2	60651 ~
17	0-1120-00816	PLANE WASHER (M8)	2	60651 ~
18	0-1000-00830	BOLT (M8X30)	2	60651 ~
19	0-1100-00820	SPRING WASHER (M8)	2	60651 ~
20	0-1120-00816	PLANE WASHER (M8)	2	60651 ~
21	NKS012-01647	BRACKET	1	60651 ~
22	0-1000-00820	BOLT (M8X20)	2	60651 ~
23	0-1100-00820	SPRING WASHER (M8)	2	60651 ~
24	0-1120-00816	PLANE WASHER (M8)	2	60651 ~
25	1-50210-3410	WIRING HARNESS (D208R029)	1	60651 ~
26	1-50210-3910	•SLOW BLOW FUSE (75A)	1	60651 ~
27	1-50210-3920	•SLOW BLOW FUSE (65A)	1	60651 ~

FIG.716 ELECTRICAL SYSTEM (4/4) (BATTERY WIRING DIAGRAM)

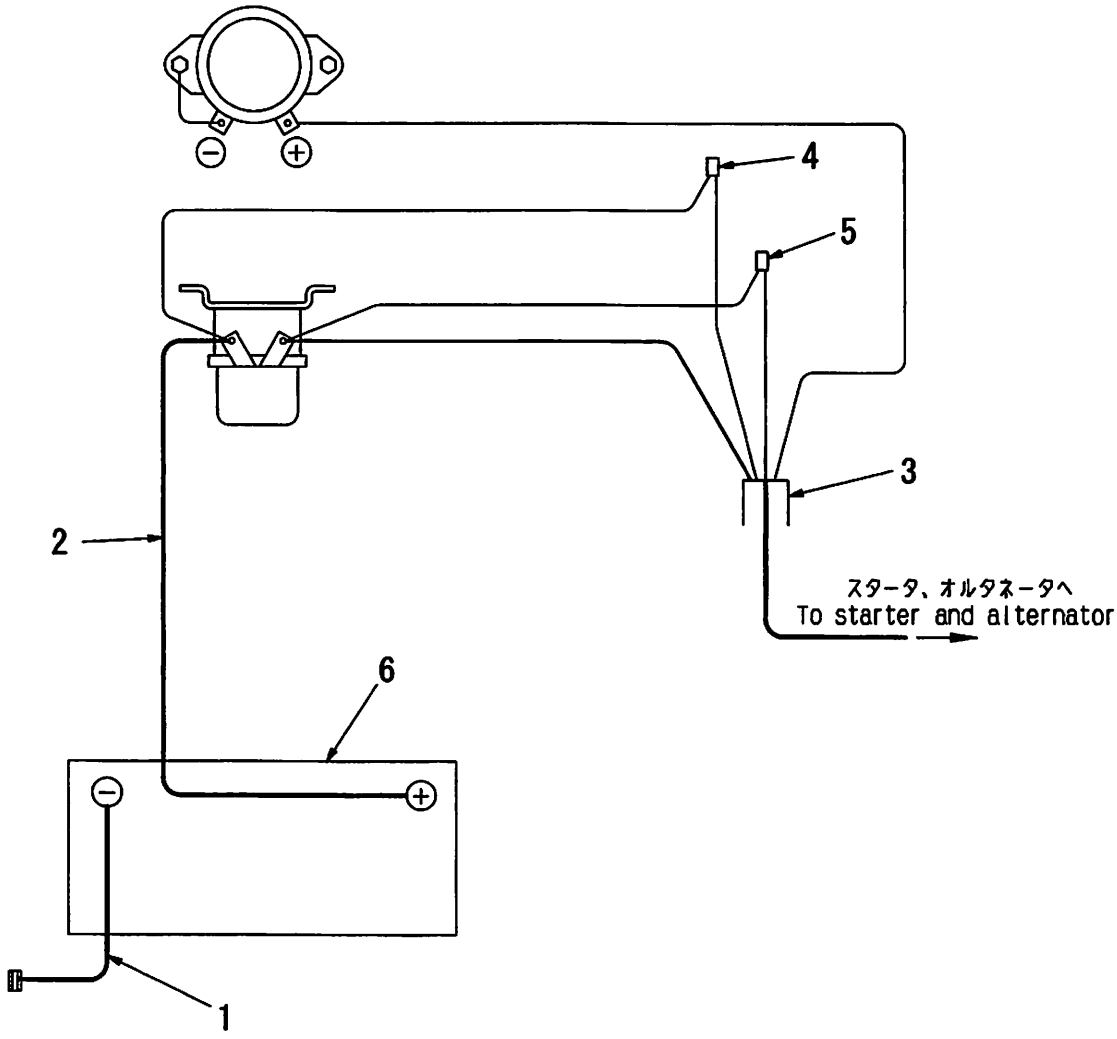

PV93347

FIG.716

INDEX	PART NO.	DESCRIPTION	Q'TY	SERIAL NO.
1	1-50210-3460	GROUND CONNECTION CABLE (D408R034)	1	60501 ~ 60650
	NKS012-01626	GROUND CONNECTION CABLE	1	60651 ~
2	1-50210-3450	BATTERY CABLE (D408R033)	1	60501 ~ 60650
	NKS012-01625	BATTERY CABLE	1	60651 ~
3	1-50210-3410	WIRING HARNESS (D208R029)	1	60501 ~
4	1-50210-3910	SLOW BLOW FUSE (75A)	1	60501 ~
5	1-50210-3920	SLOW BLOW FUSE (65A)	1	60501 ~
6	0-5000-01002	BATTERY (105D31R)	1	60501 ~

FIG.801 MARKS AND PLATES (JAPANESE)

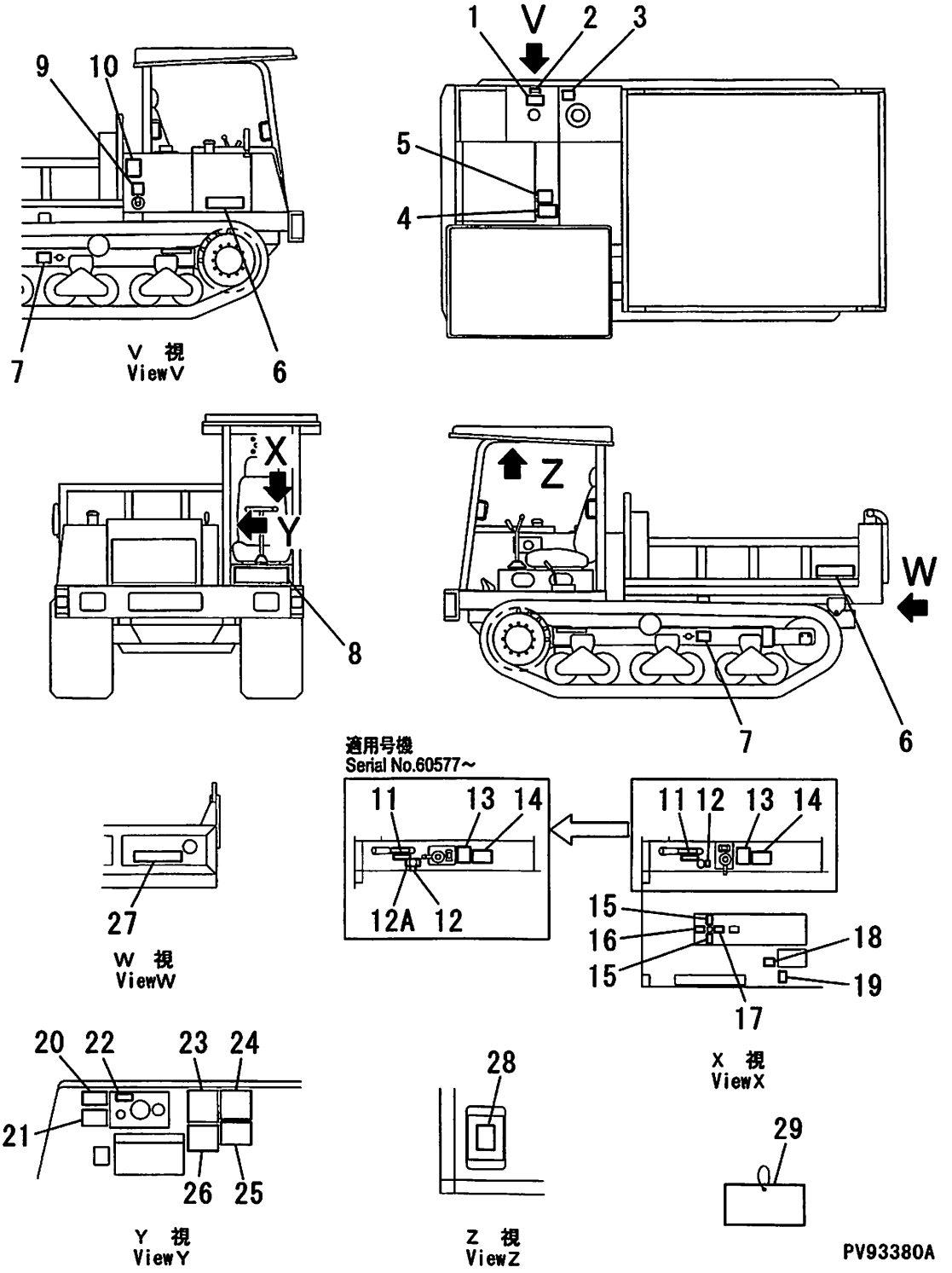

FIG.801

INDEX	PART NO.	DESCRIPTION	Q'TY	SERIAL NO.
1	1-12020-1090	CAUTION PLATE (DIESEL FUEL)	1	60501 ~
2	1-12020-1190	CAUTION PLATE (FUEL)	1	60501 ~
3	1-12020-1030	CAUTION PLATE (HYDRAULIC OIL)	1	60501 ~
4	1-12020-1130	CAUTION PLATE (FAN AND PULLEY)	1	60501 ~
5	1-12020-1120	CAUTION PLATE (RADIATOR)	1	60501 ~
6	0-7120-00602	MARK PLATE (MST-600VD)	2	60501 ~
7	1-12020-1140	CAUTION PLATE (TRACK ADJUSTING VALVE)	2	60501 ~
8	0-7110-00000	MARK PLATE (MOROOKA)	1	60501 ~
9	1-12020-1020	CAUTION PLATE (MUFFLER)	1	60501 ~
10	1-12020-1150	CAUTION PLATE (RUBBER CRAWLER)	1	60501 ~
11	0-7220-00000	OPERATING PLATE (ENGINE THROTTLE)	1	60501 ~
12	1-12020-1160	NAME PLATE (H-L TRAVEL SPEED SELECT SWITCH)	1	60501 ~
12A	1-50020-3210	OPERATING PLATE (H-L TRAVEL SPEED SELECT SWITCH)	1	60577 ~
13	1-12020-1040	CAUTION PLATE (SEAT BELT)	1	60501 ~
14	1-12020-1050	CAUTION PLATE (WARM-UP)	1	60501 ~
15	0-7210-03000	OPERATING PLATE (NEUTRAL)	2	60501 ~
16	0-7210-01000	OPERATING PLATE (FORWARD)	1	60501 ~
17	0-7210-02000	OPERATING PLATE (REVERSE)	1	60501 ~
18	0-7200-00000	OPERATING PLATE (DUMP LEVER)	1	60501 ~
19	1-12020-1160	OPERATING PLATE (DUMP LEVER LOCK)	1	60501 ~
20	0-7000-00604	NAME PLATE (SERIAL NO.)	1	60501 ~
21	0-7010-00604	NAME PLATE (SPECIFICATIONS)	1	60501 ~
22	1-57010-3180	CAUTION PLATE (ENGINE START)	1	60501 ~
23	1-12020-1081	CAUTION PLATE (SLOPE TRAVELING)	1	60501 ~
24	1-12020-1060	CAUTION PLATE (OPERATING AND MAINTENANCE)	1	60501 ~
25	1-12020-1180	CAUTION PLATE (PERIODICAL REPLACEMENT PARTS)	1	60501 ~
26	1-12020-1070	CAUTION PLATE (STARTING AND TRAVELING)	1	60501 ~
27	0-7130-03300	MARK PLATE (3300KG)	1	60501 ~
28	1-12020-1170	CAUTION PLATE (INCLINATION)	1	60501 ~
29	1-12020-1010	TAG (DO NOT OPERATE)	1	60501 ~

FIG.811 MARKS AND PLATES (ENGLISH)

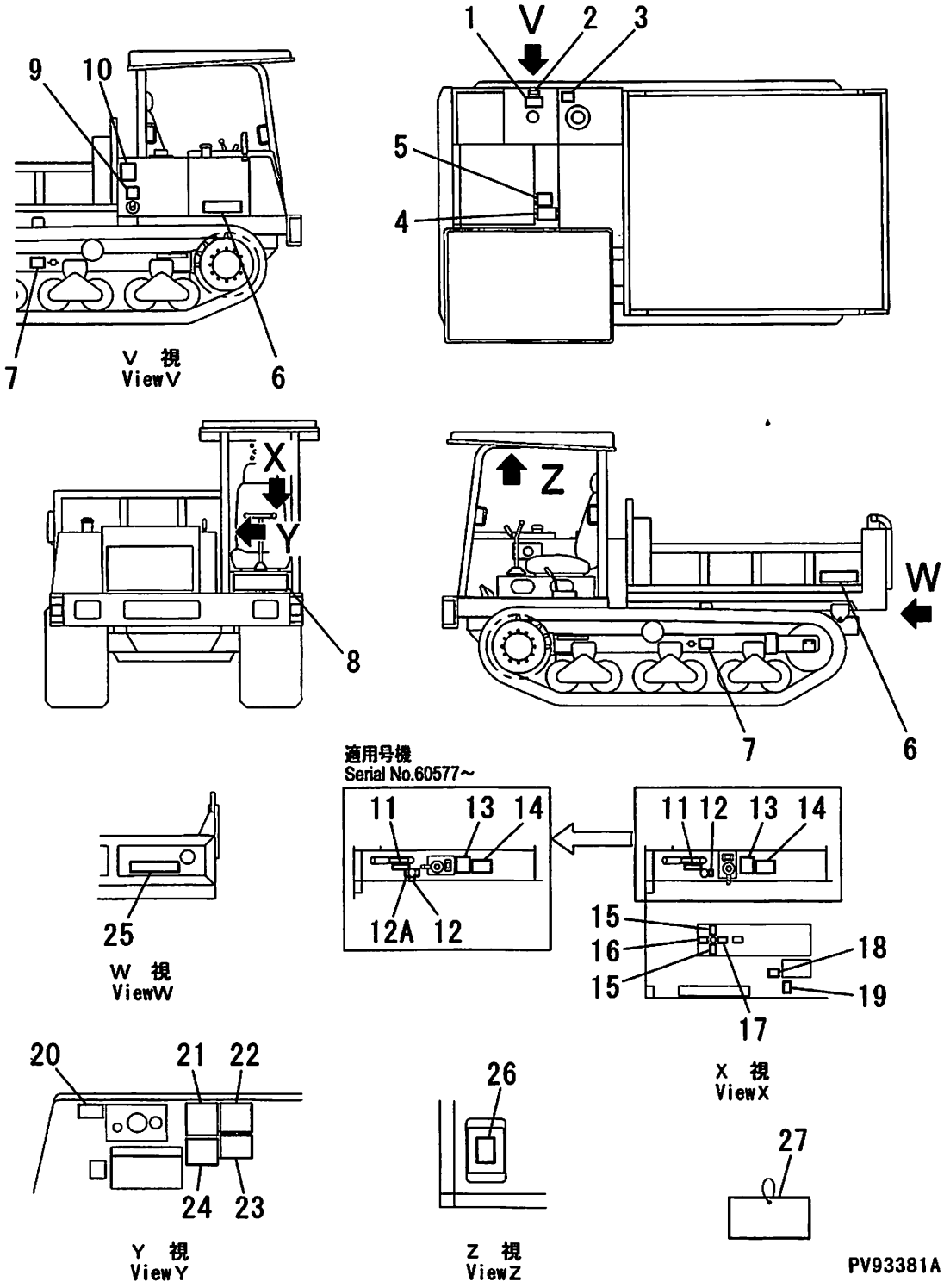

FIG.811

INDEX	PART NO.	DESCRIPTION	Q'TY	SERIAL NO.
1	1-41010-1280	CAUTION PLATE (DIESEL FUEL)	1	60501 ~
2	1-12020-1310	CAUTION PLATE (FUEL)	1	60501 ~
3	1-41010-1250	CAUTION PLATE (HYDRAULIC OIL)	1	60501 ~
4	1-41010-1260	CAUTION PLATE (FAN AND PULLEY)	1	60501 ~
5	1-41010-1300	CAUTION PLATE (RADIATOR)	1	60501 ~
6	0-7120-00602	MARK PLATE (MST-600VD)	2	60501 ~
7	1-41010-1270	CAUTION PLATE (TRACK ADJUSTING VALVE)	2	60501 ~
8	0-7110-00000	MARK PLATE (MOROOKA)	1	60501 ~
9	1-41010-1220	CAUTION PLATE (MUFFLER)	1	60501 ~
10	1-41010-1240	CAUTION PLATE (RUBBER CRAWLER)	1	60501 ~
11	0-7220-10000	OPERATING PLATE (ENGINE THROTTLE)	1	60501 ~
12	1-12020-1160	NAME PLATE (H-L TRAVEL SPEED SELECT SWITCH)	1	60501 ~
12A	1-50010-3210	OPERATING PLATE (H-L TRAVEL SPEED SELECT SWITCH)	1	60577 ~
13	1-41010-1310	CAUTION PLATE (SEAT BELT)	1	60501 ~
14	1-41010-1230	CAUTION PLATE (WARM-UP)	1	60501 ~
15	0-7210-13000	OPERATING PLATE (NEUTRAL)	2	60501 ~
16	0-7210-11000	OPERATING PLATE (FORWARD)	1	60501 ~
17	0-7210-12000	OPERATING PLATE (REVERSE)	1	60501 ~
18	0-7200-10000	OPERATING PLATE (DUMP LEVER)	1	60501 ~
19	1-41010-1350	OPERATING PLATE (DUMP LEVER LOCK)	1	60501 ~
20	0-7000-10603	NAME PLATE (SERIAL NO.)	1	60501 ~
21	1-41010-1290	CAUTION PLATE (SLOPE TRAVELING)	1	60501 ~
22	1-41010-1330	CAUTION PLATE (OPERATING AND MAINTENANCE)	1	60501 ~
23	1-12020-1210	CAUTION PLATE (PERIODICAL REPLACEMENT PARTS)	1	60501 ~
24	1-41010-1320	CAUTION PLATE (STARTING AND TRAVELING)	1	60501 ~
25	0-7130-13300	MARK PLATE (3300KG)	1	60501 ~
26	1-41010-1360	CAUTION PLATE (INCLINATION)	1	60501 ~
27	1-41010-1210	TAG (DO NOT OPERATE)	1	60501 ~

品番順索引表
NUMERICAL INDEX

PARTS No.	FIG. No.	INDEX
0-1000-00420	711A	32
0-1000-00430	711	24
0-1000-00510	121A	05
0-1000-00610	421	07
0-1000-00610	421A	07
0-1000-00612	121	12
0-1000-00612	121A	12
0-1000-00616	101	15
0-1000-00616	101	49
0-1000-00616	101A	17
0-1000-00616	101A	52
0-1000-00616	202	19
0-1000-00616	202A	15
0-1000-00616	421	28
0-1000-00616	421A	27
0-1000-00616	705	07
0-1000-00616	705A	07
0-1000-00616	711A	45
0-1000-00620	115	37
0-1000-00620	711A	35
0-1000-00630	421	10
0-1000-00630	421	14
0-1000-00630	421A	10
0-1000-00630	421A	14
0-1000-00815	115	35
0-1000-00816	121	33
0-1000-00816	121A	31
0-1000-00816	202	04
0-1000-00816	551	07
0-1000-00820	101	28
0-1000-00820	101A	31
0-1000-00820	111	03
0-1000-00820	111A	03
0-1000-00820	115	41
0-1000-00820	115A	42
0-1000-00820	201	06
0-1000-00820	201	21
0-1000-00820	201A	06
0-1000-00820	201A	22
0-1000-00820	205	03
0-1000-00820	205	10
0-1000-00820	205	17
0-1000-00820	311	13
0-1000-00820	401	27
0-1000-00820	504	02
0-1000-00820	504A	02
0-1000-00820	504B	02
0-1000-00820	555	04
0-1000-00820	555A	04
0-1000-00820	711	27

PARTS No.	FIG. No.	INDEX
0-1000-00820	715A	22
0-1000-00825	101A	42
0-1000-00825	101A	42A
0-1000-00825	115	25
0-1000-00825	115A	26
0-1000-00825	115A	35
0-1000-00825	115A	38
0-1000-00825	201	10
0-1000-00825	401A	25
0-1000-00825	421	17
0-1000-00825	421A	17
0-1000-00830	201A	10
0-1000-00830	715	14
0-1000-00830	715	17
0-1000-00830	715A	15
0-1000-00830	715A	18
0-1000-00835	101	35
0-1000-00835	402B	08
0-1000-00835	411	11
0-1000-00835	501	17
0-1000-00835	501A	17
0-1000-00840	101A	42A
0-1000-00865	121	36
0-1000-00865	121A	34
0-1000-01020	101	19
0-1000-01020	101A	21
0-1000-01020	121	14
0-1000-01020	202	11
0-1000-01020	202A	07
0-1000-01020	203	02
0-1000-01020	203	06
0-1000-01020	203	10
0-1000-01020	203A	06
0-1000-01020	203A	10
0-1000-01020	203A	14
0-1000-01020	205	22
0-1000-01020	555	07
0-1000-01020	555A	07
0-1000-01025	101A	46
0-1000-01025	121A	14
0-1000-01025	201A	16
0-1000-01025	201A	26
0-1000-01025	202	07
0-1000-01025	202A	03
0-1000-01025	204	02
0-1000-01025	211	03
0-1000-01025	411	02
0-1000-01025	551	18
0-1000-01030	101	39
0-1000-01030	101	42

PARTS No.	FIG. No.	INDEX
0-1000-01030	115	03
0-1000-01030	115A	03
0-1000-01030	201	15
0-1000-01030	211	03
0-1000-01030	501B	17
0-1000-01035	401	12
0-1000-01035	401A	12
0-1000-01035	402	11
0-1000-01035	402A	11
0-1000-01035	402B	12
0-1000-01040	402	32
0-1000-01040	402A	32
0-1000-01045	402B	31
0-1000-01050	402	33
0-1000-01050	402A	33
0-1000-01050	402B	32
0-1000-01220	202	15
0-1000-01220	202A	11
0-1000-01235	201A	30
0-1000-01235	211	07
0-1000-01235	211	11
0-1000-01245	402B	17
0-1000-01255	402	16
0-1000-01255	402A	16
0-1000-01260	401A	23
0-1000-01290	401	30
0-1000-01290	401A	28
0-1000-31030	105	13
0-1000-31030	105A	13
0-1000-31030	105B	10
0-1000-31045	105	17
0-1000-31045	105A	17
0-1000-31045	105B	14
0-1000-31050	105	05
0-1000-31050	115	16
0-1000-31050	115A	17
0-1000-31060	401	25
0-1000-31220	301	17
0-1000-31225	311	15
0-1000-31230	101	06
0-1000-31230	101A	06
0-1000-31235	101	09
0-1000-31235	101A	09
0-1000-31240	105	19
0-1000-31290	601	12
0-1000-31430	101	03
0-1000-31430	101A	03
0-1000-31435	105A	19
0-1000-31435	105B	16
0-1000-31435	301	06

PARTS No.	FIG. No.	INDEX
0-1000-31645	301	03
0-1020-30825	501	15
0-1020-30825	501A	15
0-1020-30825	501B	15
0-1020-31025	501	09
0-1020-31025	501A	09
0-1020-31025	501B	09
0-1100-00410	121	06
0-1100-00410	705	22
0-1100-00410	705A	23
0-1100-00410	711	25
0-1100-00410	711A	33
0-1100-00513	121A	06
0-1100-00615	101	16
0-1100-00615	101	50
0-1100-00615	101A	18
0-1100-00615	101A	53
0-1100-00615	115	39
0-1100-00615	121	13
0-1100-00615	121	41
0-1100-00615	121A	13
0-1100-00615	121A	39
0-1100-00615	202	20
0-1100-00615	202A	16
0-1100-00615	411	08
0-1100-00615	421	08
0-1100-00615	421	29
0-1100-00615	421A	08
0-1100-00615	421A	28
0-1100-00615	705A	20
0-1100-00615	705A	26
0-1100-00615	711	37
0-1100-00615	711A	36
0-1100-00615	711A	46
0-1100-00820	101	29
0-1100-00820	101	37
0-1100-00820	101A	32
0-1100-00820	101A	44
0-1100-00820	111	04
0-1100-00820	111A	04
0-1100-00820	115	24
0-1100-00820	115	27
0-1100-00820	115	36
0-1100-00820	115	42
0-1100-00820	115A	25
0-1100-00820	115A	28
0-1100-00820	115A	37
0-1100-00820	115A	40
0-1100-00820	115A	43
0-1100-00820	121	34

PARTS No.	FIG. No.	INDEX
0-1100-00820	121	39
0-1100-00820	121A	32
0-1100-00820	121A	37
0-1100-00820	201	07
0-1100-00820	201	22
0-1100-00820	201A	07
0-1100-00820	201A	13
0-1100-00820	201A	23
0-1100-00820	202	05
0-1100-00820	203A	05
0-1100-00820	205	04
0-1100-00820	205	09
0-1100-00820	205	13
0-1100-00820	205	18
0-1100-00820	311	14
0-1100-00820	401	29
0-1100-00820	401A	26
0-1100-00820	411	12
0-1100-00820	421	20
0-1100-00820	421A	19
0-1100-00820	501	20
0-1100-00820	501A	20
0-1100-00820	504	03
0-1100-00820	504A	03
0-1100-00820	504B	03
0-1100-00820	551	08
0-1100-00820	555	05
0-1100-00820	555A	05
0-1100-00820	705	03
0-1100-00820	705	11
0-1100-00820	705A	03
0-1100-00820	705A	11
0-1100-00820	711	28
0-1100-00820	711A	18
0-1100-00820	711A	27
0-1100-00820	715	15
0-1100-00820	715	18
0-1100-00820	715A	16
0-1100-00820	715A	19
0-1100-00820	715A	23
0-1100-01025	101	20
0-1100-01025	101	40
0-1100-01025	101	44
0-1100-01025	101A	22
0-1100-01025	101A	47
0-1100-01025	105	14
0-1100-01025	105	18
0-1100-01025	105A	14
0-1100-01025	105A	18
0-1100-01025	105B	11

PARTS No.	FIG. No.	INDEX
0-1100-01025	105B	15
0-1100-01025	115	05
0-1100-01025	115A	05
0-1100-01025	121	15
0-1100-01025	121A	15
0-1100-01025	201	16
0-1100-01025	201A	17
0-1100-01025	201A	27
0-1100-01025	202	08
0-1100-01025	202	12
0-1100-01025	202A	04
0-1100-01025	202A	08
0-1100-01025	203	03
0-1100-01025	203	07
0-1100-01025	203	11
0-1100-01025	203A	07
0-1100-01025	203A	11
0-1100-01025	203A	15
0-1100-01025	204	03
0-1100-01025	205	23
0-1100-01025	211	04
0-1100-01025	401	14
0-1100-01025	401A	14
0-1100-01025	402	12
0-1100-01025	402	24
0-1100-01025	402	29
0-1100-01025	402	34
0-1100-01025	402A	12
0-1100-01025	402A	24
0-1100-01025	402A	29
0-1100-01025	402A	34
0-1100-01025	402B	13
0-1100-01025	402B	28
0-1100-01025	402B	33
0-1100-01025	411	03
0-1100-01025	501B	18
0-1100-01025	551	19
0-1100-01025	555	08
0-1100-01025	555A	08
0-1100-01025	711	07
0-1100-01025	711A	08
0-1100-01225	101A	07
0-1100-01230	101	07
0-1100-01230	101	11
0-1100-01230	101A	10
0-1100-01230	101A	13
0-1100-01230	201A	31
0-1100-01230	202	16
0-1100-01230	202A	12
0-1100-01230	211	08

PARTS No.	FIG. No.	INDEX
0-1100-01230	211	12
0-1100-01230	301	18
0-1100-01230	311	16
0-1100-01230	401	18
0-1100-01230	401	21
0-1100-01230	401A	21
0-1100-01230	402	19
0-1100-01230	402A	19
0-1100-01230	402B	18
0-1100-01230	601	14
0-1100-01435	101	04
0-1100-01435	101A	04
0-1100-01640	301	04
0-1100-02051	401	09
0-1100-02051	401A	09
0-1100-03075	301	20
0-1100-03075	321	13
0-1100-31025	105	07
0-1100-31025	115	18
0-1100-31025	115A	19
0-1100-31230	105	20
0-1100-31435	105A	20
0-1100-31435	105B	17
0-1100-31435	301	07
0-1110-00820	111A	18
0-1110-01020	715	11
0-1110-01020	715A	11
0-1110-02040	402B	06
0-1120-00510	421	25
0-1120-00510	421A	24
0-1120-00616	101	17
0-1120-00616	101	51
0-1120-00616	101A	19
0-1120-00616	101A	54
0-1120-00616	115	40
0-1120-00616	121	42
0-1120-00616	121A	40
0-1120-00616	202	21
0-1120-00616	202A	17
0-1120-00616	421	09
0-1120-00616	421	16
0-1120-00616	421	30
0-1120-00616	421A	09
0-1120-00616	421A	16
0-1120-00616	421A	29
0-1120-00616	705	08
0-1120-00616	705A	08
0-1120-00616	711A	23
0-1120-00616	711A	37
0-1120-00816	101	30

PARTS No.	FIG. No.	INDEX
0-1120-00816	101	38
0-1120-00816	101A	33
0-1120-00816	101A	45
0-1120-00816	111	05
0-1120-00816	111A	05
0-1120-00816	115	32
0-1120-00816	115	43
0-1120-00816	115A	44
0-1120-00816	121	35
0-1120-00816	121	37
0-1120-00816	121A	33
0-1120-00816	121A	35
0-1120-00816	201	08
0-1120-00816	201	12
0-1120-00816	201	23
0-1120-00816	201A	08
0-1120-00816	201A	11
0-1120-00816	201A	24
0-1120-00816	202	06
0-1120-00816	203A	04
0-1120-00816	205	11
0-1120-00816	401A	27
0-1120-00816	421	18
0-1120-00816	421A	18
0-1120-00816	501	18
0-1120-00816	501A	18
0-1120-00816	504	04
0-1120-00816	504A	04
0-1120-00816	504B	04
0-1120-00816	555	06
0-1120-00816	555A	06
0-1120-00816	705	04
0-1120-00816	705A	04
0-1120-00816	711	14
0-1120-00816	711A	19
0-1120-00816	711A	28
0-1120-00816	715	08
0-1120-00816	715	16
0-1120-00816	715	19
0-1120-00816	715A	08
0-1120-00816	715A	17
0-1120-00816	715A	20
0-1120-00816	715A	24
0-1120-01020	101	21
0-1120-01020	101	41
0-1120-01020	101	45
0-1120-01020	101A	23
0-1120-01020	101A	48
0-1120-01020	121	16
0-1120-01020	121A	16

PARTS No.	FIG. No.	INDEX
0-1120-01020	201	17
0-1120-01020	201A	18
0-1120-01020	201A	28
0-1120-01020	202	09
0-1120-01020	202	13
0-1120-01020	203	04
0-1120-01020	203	08
0-1120-01020	203	12
0-1120-01020	203A	08
0-1120-01020	203A	12
0-1120-01020	203A	16
0-1120-01020	204	04
0-1120-01020	205	24
0-1120-01020	211	05
0-1120-01020	402	13
0-1120-01020	402A	13
0-1120-01020	402B	14
0-1120-01020	411	04
0-1120-01020	551	20
0-1120-01020	555	09
0-1120-01020	555A	09
0-1120-01020	711	08
0-1120-01020	711A	09
0-1120-01223	101	12
0-1120-01223	101A	11
0-1120-01223	101A	14
0-1120-01223	105	21
0-1120-01223	211	09
0-1120-01223	211	13
0-1120-01223	401	23
0-1120-01223	402	17
0-1120-01223	402A	17
0-1120-01223	402B	19
0-1120-01225	201A	32
0-1120-01225	202	17
0-1120-01225	202A	13
0-1120-01425	105A	21
0-1120-01425	105B	18
0-1120-01432	601	08
0-1120-01630	202	26
0-1120-01630	202A	22
0-1120-31020	115	19
0-1120-31020	115A	20
0-1130-00408	711	26
0-1130-00408	711A	34
0-1150-00808	711A	16
0-1150-00808	711A	25
0-1150-01010	711A	06
0-1160-00823	205	05
0-1160-00823	205	19

PARTS No.	FIG. No.	INDEX
0-1160-01032	202A	05
0-1160-01032	202A	09
0-1200-00403	705A	22
0-1200-00605	115	38
0-1200-00605	121	40
0-1200-00605	121A	38
0-1200-00605	411	07
0-1200-00605	421	11
0-1200-00605	421	15
0-1200-00605	421A	11
0-1200-00605	421A	15
0-1200-00605	705A	09
0-1200-00605	705A	19
0-1200-00605	705A	25
0-1200-00605	711	36
0-1200-00806	101	36
0-1200-00806	101A	43
0-1200-00806	111A	17
0-1200-00806	115	23
0-1200-00806	115	26
0-1200-00806	115	30
0-1200-00806	115A	24
0-1200-00806	115A	27
0-1200-00806	115A	31
0-1200-00806	115A	36
0-1200-00806	115A	39
0-1200-00806	121	38
0-1200-00806	121A	36
0-1200-00806	201	11
0-1200-00806	201A	12
0-1200-00806	203A	03
0-1200-00806	205	08
0-1200-00806	205	12
0-1200-00806	401	28
0-1200-00806	402B	09
0-1200-00806	421	19
0-1200-00806	501	19
0-1200-00806	501A	19
0-1200-00806	705	02
0-1200-00806	705	10
0-1200-00806	705A	02
0-1200-00806	705A	10
0-1200-00806	711	13
0-1200-00806	711A	15
0-1200-00806	711A	17
0-1200-00806	711A	26
0-1200-00806	715	07
0-1200-00806	715A	07
0-1200-01008	101	43
0-1200-01008	115	04

PARTS No.	FIG. No.	INDEX
0-1200-01008	115A	04
0-1200-01008	401	13
0-1200-01008	401	26
0-1200-01008	401A	13
0-1200-01008	402	23
0-1200-01008	402	28
0-1200-01008	402A	23
0-1200-01008	402A	28
0-1200-01008	402B	23
0-1200-01008	402B	27
0-1200-01008	711	06
0-1200-01008	711A	07
0-1200-01008	715	10
0-1200-01008	715A	10
0-1200-01210	101	10
0-1200-01210	101A	12
0-1200-01210	401	20
0-1200-01210	401	31
0-1200-01210	401A	19
0-1200-01210	401A	20
0-1200-01210	401A	24
0-1200-01210	401A	29
0-1200-01210	402	18
0-1200-01210	402A	18
0-1200-01210	601	13
0-1200-02016	401A	08
0-1200-31008	105	06
0-1200-31008	115	17
0-1200-31008	115A	18
0-1200-33024	301	19
0-1200-33024	321	12
0-1201-01008	402	27
0-1201-01008	402A	27
0-1201-01008	402B	26
0-1201-01210	401	17
0-1201-01210	401A	17
0-1220-00805	421	23
0-1220-00805	421A	22
0-1220-01006	401	03
0-1220-01006	401A	03
0-1220-01006	402	35
0-1220-01006	402A	35
0-1220-01006	421	04
0-1220-01006	421A	04
0-1220-01408	601	07
0-1242-00808	115	31
0-1242-01200	401	22
0-1242-02000	401	08
0-1260-00404	705	24
0-1260-00606	705	09
0-1260-00606	705	19
0-1260-00606	705	26
0-1260-00606	711	18
0-1260-00808	711	15
0-1260-00808	711	20
0-1300-00410	121	05
0-1300-00416	705	21
0-1300-00616	202	31
0-1300-00616	202A	27
0-1300-00616	701	23
0-1300-00616	701A	23
0-1300-00616	701B	23
0-1311-01010	202	28
0-1311-01010	202A	24
0-1320-00416	701	12
0-1320-00416	701A	12
0-1320-00416	701B	12
0-1320-00512	701	15
0-1320-00512	701A	15
0-1320-00512	701B	15
0-1320-00616	701	02
0-1320-00616	701	10
0-1320-00616	701A	02
0-1320-00616	701A	10
0-1320-00616	701B	02
0-1320-00616	701B	10
0-1350-00830	321	09
0-1500-00838	105A	05
0-1500-00838	105B	05
0-1700-00832	105A	06
0-1700-00832	105B	06
0-1710-00823	105A	07
0-1710-00823	105B	07
0-2000-03130	301	10
0-2000-03130	311	06
0-2000-03130	501	14
0-2000-03130	501A	14
0-2000-03130	501B	14
0-2000-03135	501	08
0-2000-03135	501A	08
0-2000-03140	501B	08
0-2000-03145	321	10
0-2000-03170	311	12
0-2010-02411	504	14
0-2010-02411	504	15
0-2010-02411	504	17
0-2010-02411	504A	14
0-2010-02411	504A	15
0-2010-02411	504A	17
0-2010-02411	504B	14

PARTS No.	FIG. No.	INDEX
0-2010-02411	504B	15
0-2010-02411	504B	17
0-2010-02414	505	10
0-2010-02414	505A	15
0-2010-02414	505B	15
0-2010-02418	121	10
0-2010-02418	121A	10
0-2010-02418	503	08
0-2010-02418	503A	06
0-2010-02418	505	14
0-2010-02418	505A	19
0-2010-02418	505B	19
0-2040-02217	501	22
0-2040-02217	501	23
0-2040-02217	501A	23
0-2040-02217	501A	24
0-2040-02217	501B	21
0-2040-02217	501B	22
0-2040-02217	502	09
0-2040-02217	502A	10
0-2040-02217	502B	10
0-2040-02520	501	12
0-2040-02520	501A	12
0-2040-02520	501B	12
0-2040-02520	502	02
0-2040-02520	502A	02
0-2040-02520	502B	02
0-2040-03024	503A	05
0-2040-03024	505	03
0-2040-03030	502B	15
0-2040-03030	503	05
0-2040-03030	505A	03
0-2040-03030	505A	05
0-2040-03030	505B	03
0-2040-03030	505B	05
0-2040-03030	506	02
0-2040-03030	506	05
0-2100-00629	505B	32
0-2100-00630	505	27
0-2100-00630	505A	32
0-2100-01483	501B	01
0-2100-01487	501	01
0-2100-01487	501A	01
0-2150-01035	121	07
0-2210-00359	501A	21
0-2210-00363	501A	22
0-2210-00375	501	21
0-2210-00375	501B	19
0-2210-00376	501B	20
0-2220-00482	506	08

PARTS No.	FIG. No.	INDEX
0-2220-00655	505A	01
0-2220-00660	502B	11
0-2220-00662	505B	01
0-2220-01060	506	01
0-2221-00435	502	07
0-2222-00415	502	01
0-2230-00295	504A	06
0-2230-00295	504B	06
0-2230-00347	505	07
0-2230-00347	505A	12
0-2230-00347	505B	12
0-2230-00383	505	08
0-2230-00384	505A	13
0-2230-00384	505B	13
0-2230-00427	505	11
0-2230-00427	505A	16
0-2230-00427	505B	16
0-2230-00463	505	12
0-2230-00463	505A	17
0-2230-00464	505B	17
0-2230-01029	505	15
0-2230-01030	505B	20
0-2230-01035	505A	20
0-2231-00200	504	09
0-2231-00200	504A	09
0-2231-00200	504B	09
0-2231-00205	504	06
0-2231-00245	504	12
0-2231-00250	504	05
0-2231-00600	505B	02
0-2231-01000	505	16
0-2231-01000	505A	02
0-2231-01000	505A	21
0-2231-01006	505B	21
0-2410-00483	501	10
0-2420-00432	502A	08
0-2420-00432	502B	08
0-2420-00440	502A	07
0-2420-00440	502B	07
0-2420-00462	501A	10
0-2420-00469	501B	10
0-2420-00477	502A	01
0-2421-00418	502B	01
0-2430-00236	504	07
0-2430-00236	504A	07
0-2430-00236	504B	07
0-2430-00256	504	10
0-2430-00256	504A	10
0-2430-00256	504B	10
0-2430-00260	504A	05

PARTS No.	FIG. No.	INDEX
0-2430-00260	504B	05
0-2430-00267	504	08
0-2430-00267	504A	08
0-2430-00267	504B	08
0-2430-00296	504A	11
0-2430-00296	504B	11
0-2430-00297	504	11
0-2430-00690	505	01
0-2431-00245	504A	12
0-2431-00245	504B	12
0-2471-00625	503	02
0-2471-00625	503A	03
0-2471-00630	503	01
0-2471-00632	503A	04
0-2471-00665	503A	02
0-2471-00670	503A	01
0-2700-00012	121	08
0-2700-00012	121	23
0-2700-00012	121	28
0-2700-00035	505	29
0-2700-00035	505A	34
0-2700-00035	505B	34
0-2700-00050	115	14
0-2700-00050	115A	15
0-2700-00050	501B	03
0-2700-00070	115	13
0-2700-00070	115A	14
0-2700-10044	501	03
0-2700-10044	501A	03
0-2700-10065	111	12
0-2700-10065	111A	12
0-2700-10090	111	11
0-2700-10090	111	14
0-2700-10090	111A	11
0-2700-10090	111A	14
0-2710-00024	101A	39
0-2710-00056	101	33
0-2720-00606	711A	44
0-2720-01206	421	27
0-2720-01206	421A	26
0-2720-01206	711	35
0-2720-01206	711A	44
0-2720-01506	711A	44
0-2720-01806	711A	44
0-2720-02206	711A	44
0-2720-02506	711	35
0-2720-03006	711A	44
0-2800-00202	121	43
0-2800-00202	121A	41
0-2800-00202	503	10

PARTS No.	FIG. No.	INDEX
0-2800-00202	503A	08
0-2800-00202	711	38
0-2800-00383	121	43
0-2800-00383	121A	41
0-2800-00383	503	10
0-2800-00383	503A	08
0-2800-00383	711	38
0-2810-04214	205	16
0-2820-01208	701	04
0-2820-01208	701A	04
0-2820-01208	701B	04
0-2840-02013	503	09
0-2840-02013	503A	07
0-2840-02020	503	09
0-2840-02020	503A	07
0-3000-01014	402	20
0-3000-01015	402B	20
0-3000-01017	402A	20
0-3000-01032	402A	21
0-3000-01033	402B	21
0-3000-01041	402	21
0-3010-01258	401	15
0-3010-01260	401A	15
0-3100-11000	402	22
0-3100-11000	402A	22
0-3100-11000	402B	22
0-3100-11200	401	19
0-3100-11200	401A	18
0-3101-11200	401	16
0-3101-11200	401A	16
0-3111-11000	402	26
0-3111-11000	402A	26
0-3111-11000	402B	25
0-3130-01060	402	25
0-3130-01060	402A	25
0-3130-01060	402B	24
0-3220-01018	421	26
0-3220-01018	421A	25
0-3220-03725	202	25
0-3220-03725	202A	21
0-3220-05970	601	24
0-3260-00663	402	08
0-3260-00663	402A	08
0-3300-01218	402	06
0-3300-01218	402A	06
0-3300-01225	401	05
0-3300-01225	401A	05
0-3300-01635	301	14
0-3310-02572	311	04
0-3310-02575	321	06

PARTS No.	FIG. No.	INDEX
0-3400-00000	321	14
0-3400-00100	402B	03
0-3400-00100	601	11
0-3400-00170	601	21
0-3500-01010	402	30
0-3500-01010	402A	30
0-3500-01010	402B	29
0-3500-01020	402	31
0-3500-01020	402A	31
0-3500-01020	402B	30
0-4000-00400	551	17
0-4000-00400	551	21
0-40001-00600	502B	16
0-4010-00200	311	11
0-4010-00300	551	22
0-4100-01006	505B	35
0-4121-01706	505	03
0-4121-02106	502B	15
0-4121-02106	503	05
0-4121-02110	506	05
0-4130-00606	505A	06
0-4130-00606	505B	06
0-4130-00606	506	07
0-4130-01010	505	21
0-4130-01010	505A	26
0-4130-01010	505B	26
0-4200-01010	505	20
0-4200-01010	505A	25
0-4210-00202	504A	13
0-4210-00404	501	11
0-4210-00404	501A	11
0-4210-00404	501B	11
0-4210-00404	502	08
0-4210-00404	506	10
0-4210-00603	505	09
0-4210-00603	505A	14
0-4210-00603	505B	14
0-4210-00604	505	13
0-4210-00604	505A	18
0-4210-00604	505B	18
0-4210-00606	502B	12
0-4210-00606	505	04
0-4210-00610	505	17
0-4210-00610	505A	09
0-4210-00610	505A	22
0-4210-00610	505B	22
0-4210-00610	506	03
0-4210-01006	506	06
0-4210-01010	505	22
0-4210-01010	505	30

PARTS No.	FIG. No.	INDEX
0-4210-01010	505A	27
0-4210-01010	505A	35
0-4210-01010	505B	27
0-4210-01010	505B	36
0-4211-00202	504	14
0-4211-00202	504	17
0-4211-00202	504A	14
0-4211-00202	504A	17
0-4211-00202	504B	14
0-4211-00202	504B	17
0-4211-00303	505	10
0-4211-00303	505A	15
0-4211-00303	505B	15
0-4211-00406	503	08
0-4211-00406	503A	06
0-4212-00606	502B	14
0-4212-00606	505	06
0-4212-00606	505	26
0-4212-00606	505A	11
0-4212-00606	505A	31
0-4212-00606	505B	11
0-4212-00610	505B	29
0-4212-00610	505B	31
0-4212-01010	501B	05
0-4212-01010	505	24
0-4212-01010	505A	29
0-4212-01010	505B	25
0-4212-01010	551	03
0-4212-01414	501	05
0-4212-01414	501A	05
0-4220-00606	505	28
0-4220-00606	505A	33
0-4220-00606	505B	33
0-4220-01010	501B	02
0-4220-01414	501	02
0-4220-01414	501A	02
0-4300-00202	504	13
0-4300-00202	504A	18
0-4300-00202	504B	13
0-4300-00202	504B	18
0-4300-00604	502	03
0-4300-00604	502A	03
0-4300-00604	502B	03
0-4300-00604	506	09
0-4300-00606	503	07
0-4300-00606	505	02
0-4300-00606	505A	04
0-4300-00606	505B	04
0-4300-00606	505B	08
0-4300-00610	505A	08

PARTS No.	FIG. No.	INDEX
0-4300-01010	505	18
0-4300-01010	505A	23
0-4300-01010	505B	23
0-4301-00404	506	12
0-4301-00604	502	05
0-4301-00604	502A	05
0-4301-00604	502B	05
0-4310-00303	501	24
0-4310-00303	501A	25
0-4310-00303	501B	23
0-4310-00606	503	06
0-4310-00606	505B	09
0-4320-00202	504	15
0-4320-00202	504A	15
0-4320-00202	504B	15
0-4320-00404	505	14
0-4320-00404	505A	19
0-4320-00404	505B	19
0-4321-00904	502A	10
0-4321-00904	502B	10
0-4321-01203	501	23
0-4321-01203	501A	24
0-4321-01203	501B	22
0-4321-01404	502	02
0-4321-01404	502	09
0-4321-01404	502A	02
0-4321-01404	502B	02
0-4321-01706	503A	05
0-4321-02106	505A	03
0-4321-02106	505B	03
0-4321-02110	506	02
0-4326-01203	501	22
0-4326-01203	501A	23
0-4326-01203	501B	21
0-4326-01404	501	12
0-4326-01404	501A	12
0-4326-01404	501B	12
0-4326-02106	505A	05
0-4326-02106	505B	05
0-4360-01010	501B	04
0-4360-01010	505	31
0-4360-01010	505A	36
0-4360-01010	505B	37
0-4360-01414	501	04
0-4360-01414	501A	04
0-4370-01010	505	19
0-4370-01010	505A	24
0-4370-01010	505B	24
0-4380-00202	121	21
0-4380-01010	501B	06

PARTS No.	FIG. No.	INDEX
0-4380-01410	501	06
0-4380-01410	501A	06
0-4400-01006	505	23
0-4400-01006	505A	28
0-4400-01010	505B	28
0-4405-00606	502B	13
0-4405-00606	505A	07
0-4405-00606	505B	07
0-4405-00606	506	04
0-4410-00202	504	16
0-4410-00202	504A	16
0-4410-00202	504B	16
0-4412-00404	502A	09
0-4412-00404	502B	09
0-4450-00606	505	05
0-4450-00606	505A	10
0-4450-00606	505B	10
0-4470-00402	502	06
0-4470-00402	502A	06
0-4470-00402	502B	06
0-5000-01002	715	01
0-5000-01002	715A	01
0-5000-01002	716	06
0-5010-00000	715	02
0-5010-00000	715A	02
0-5011-00000	715	03
0-5011-00000	715A	03
0-5060-00015	701	21
0-5060-00015	701A	21
0-5060-00015	701B	21
0-5120-01200	712	07
0-5230-00012	701	05
0-5230-00012	701A	05
0-5230-00012	701B	05
0-5400-00000	701	07
0-5400-00000	701A	07
0-5400-00001	701B	07
0-5480-00000	701A	18
0-5480-00000	701B	18
0-5600-01200	711	12
0-5600-01200	711A	13
0-5600-01200	712	08
0-5620-00000	111	02
0-5620-00000	111A	02
0-6000-06009	321	05
0-6000-06207	311	03
0-6002-30207	301	11
0-6100-00206	402	14
0-6100-00206	402A	14
0-6100-00206	402B	15

PARTS No.	FIG. No.	INDEX
0-6102-00204	402	09
0-6102-00204	402A	09
0-6102-00204	402B	10
0-6110-00205	401	06
0-6110-00205	401A	06
0-7000-00604	801	20
0-7000-10603	811	20
0-7010-00604	801	21
0-7110-00000	801	08
0-7110-00000	811	08
0-7120-00602	801	06
0-7120-00602	811	06
0-7130-03300	801	27
0-7130-13300	811	25
0-7200-00000	801	18
0-7200-10000	811	18
0-7210-01000	801	16
0-7210-02000	801	17
0-7210-03000	801	15
0-7210-11000	811	16
0-7210-12000	811	17
0-7210-13000	811	15
0-7220-00000	801	11
0-7220-10000	811	11
1-10330-1160	301	16
1-11110-1110	101	08
1-11110-1110	101A	08
1-11130-1110	115	01
1-11130-1111	115A	01
1-11130-1112	115A	01
1-11130-1140	115	02
1-11130-1140	115A	02
1-11160-1120	105	09
1-11160-1120	105	11
1-11160-1120	105A	09
1-11160-1120	105A	11
1-11210-1140	701	08
1-11210-1140	701A	08
1-11210-1140	701B	08
1-11330-0020	301	12
1-11330-0020	311	07
1-11330-1230	301	23
1-11350-0020	321	07
1-11350-1120	321	04
1-11350-1130	321	08
1-11410-1210	411	06
1-11510-1210	202	18
1-11510-1210	202A	14
1-11660-0020	551	14
1-11660-1120	551	05

PARTS No.	FIG. No.	INDEX
1-11660-1140	551	09
1-11660-1150	551	10
1-11660-1160	551	13
1-11660-1170	551	12
1-11660-1180	551	14
1-11660-1190	551	15
1-11660-1210	551	16
1-11660-1220	551	11
1-11660-1230	551	02
1-11660-1250	551	04
1-11710-1150	601	05
1-12020-1010	801	29
1-12020-1020	801	09
1-12020-1030	801	03
1-12020-1040	801	13
1-12020-1050	801	14
1-12020-1060	801	24
1-12020-1070	801	26
1-12020-1081	801	23
1-12020-1090	801	01
1-12020-1120	801	05
1-12020-1130	801	04
1-12020-1140	801	07
1-12020-1150	801	10
1-12020-1160	801	12
1-12020-1160	801	19
1-12020-1170	801	28
1-12020-1180	801	25
1-12020-1190	801	02
1-12020-1210	811	23
1-12020-1310	811	02
1-12210-1140	701	17
1-12210-1140	701A	17
1-12210-1140	701B	17
1-12210-1160	701A	19
1-12210-1160	701B	19
1-12210-1460	711	21
1-12210-1470	711	22
1-12210-1480	711	23
1-12210-1480	711A	31
1-12210-1490	711	29
1-12210-1490	711A	38
1-12210-1490	712	11
1-12210-1610	705	05
1-12210-1610	705A	05
1-12320-2110	301	05
1-12330-0011	301	08
1-12330-1111	301	08
1-12330-1120	301	09
1-12330-1150	301	13

PARTS No.	FIG. No.	INDEX
1-12330-1210	301	21
1-12330-1220	301	22
1-12330-1241	301	15
1-12340-0020	311	01
1-12340-1140	311	10
1-12340-2110	311	01
1-12340-2120	311	02
1-12350-0010	321	03
1-12350-1110	321	03
1-12420-1111	401	01
1-12420-1111	401A	01
1-12420-1120	401	02
1-12420-1120	401A	02
1-12420-1131	401	04
1-12420-1131	401A	04
1-12420-1140	401	07
1-12420-1140	401A	07
1-12420-1150	401	10
1-12420-1150	401A	10
1-12420-1160	401	11
1-12420-1160	401A	11
1-12420-1250	402	02
1-12420-1250	402A	02
1-12420-1270	402	05
1-12420-1270	402A	05
1-12420-1280	402	10
1-12420-1280	402A	10
1-12420-1280	402B	11
1-12520-1321	205	02
1-12630-0012	301	02
1-12640-0010	601	20
1-12670-1410	501	07
1-12670-1410	501A	07
1-12670-1410	501B	07
1-12710-1110	601	01
1-12710-1120	601	02
1-12710-1130	601	03
1-12710-1140	601	04
1-12710-1170	601	06
1-12710-1320	601	22
1-12710-1330	601	23
1-12710-1360	601	09
1-12710-1400	601	15
1-12710-1410	601	16
1-12710-1420	601	18
1-12710-1430	601	19
1-12710-1440	601	15
1-12710-1460	601	17
1-12710-1500	601	15
1-12710-1560	601	17

PARTS No.	FIG. No.	INDEX
1-13150-1120	121	22
1-14130-1130	115	22
1-14130-1130	115A	23
1-14130-1130	115A	34
1-16110-1130	551	06
1-16210-1600	701	20
1-16210-1600	701A	20
1-16210-1600	701B	20
1-16210-1690	701	22
1-16210-1690	701A	22
1-16210-1690	701B	22
1-16350-1210	321	01
1-16410-1131K	411	05
1-18210-1521	711	17
1-18210-1521	711A	21
1-18540-0010	205	06
1-18620-0013	501	16
1-18620-0013	501A	16
1-18620-0013	501B	16
1-21670-1210	505	25
1-21670-1210	505A	30
1-21670-1210	505B	30
1-23420-1310	401	24
1-23420-1310	401A	22
1-23670-1420	501	13
1-23670-1420	501A	13
1-23670-1420	501B	13
1-25340-1130	311	05
1-25420-1270	402	03
1-25420-1270	402A	03
1-25420-1270	402B	02
1-25420-1290	402	07
1-25420-1290	402A	07
1-25420-1311	402	15
1-25420-1311	402A	15
1-25420-1311	402B	16
1-25540-0020	205	14
1-25670-1220	506	11
1-28210-1520	711	19
1-28210-1520	711A	24
1-29150-0012	121	01
1-29150-1112	121	01
1-29210-1150	701	16
1-29210-1150	701A	16
1-29210-1150	701B	16
1-29210-1510	711	31
1-29210-1510	711A	40
1-29210-1510	712	16
1-29210-1520	705	06
1-29210-1520	705A	06

PARTS No.	FIG. No.	INDEX
1-29210-1550	711	30
1-29210-1550	711A	39
1-29210-1550	712	15
1-29510-1311	202	27
1-29510-1311	202A	23
1-29520-1200	202	29
1-29520-1200	202A	25
1-29520-1220	202	29
1-29520-1220	202A	25
1-29520-1230	202	30
1-29520-1230	202A	26
1-29520-1480	201	19
1-29520-1480	201A	20
1-29520-1490	201	18
1-29520-1490	201A	19
1-29520-1540	202	01
1-29530-1110	211	10
1-29530-1120	211	06
1-29540-1510	205	07
1-29540-1610	205	21
1-29540-1620	205	20
1-29670-1110	505	32
1-29670-1110	505A	37
1-30120-1170	701	19
1-30130-3110	115	20
1-30130-3111	115A	21
1-30130-3130	115	33
1-30130-3150	115	11
1-30130-3150	115A	11
1-30130-3160	115	33
1-30130-3210	115	12
1-30130-3210	115	21
1-30130-3210	115A	22
1-30130-3310	115	29
1-30130-3310	115A	12
1-30130-3310	115A	30
1-30130-3320	115A	13
1-30160-1110	105	08
1-30160-1110	105A	08
1-30210-2730	715	06
1-30210-2730	715A	06
1-30350-1210	321	02
1-30410-1190	421	21
1-30410-1190	421A	20
1-30510-2250	202	14
1-30510-2250	202A	10
1-30530-1130	211	01
1-30530-1180	211	02
1-31140-1210	101	25
1-31140-1210	101A	28

PARTS No.	FIG. No.	INDEX
1-31150-1150	121	09
1-31620-0030	421	01
1-31620-0030	421A	01
1-31620-1510	421	01
1-31620-1510	421A	01
1-31620-1520	421	02
1-31620-1520	421A	02
1-31620-1530	421	03
1-31620-1530	421A	03
1-31620-1540	421	05
1-31620-1540	421A	05
1-31620-1550	421	12
1-31620-1550	421A	12
1-31620-1590	421	06
1-31620-1590	421A	06
1-31620-1610	421	13
1-31620-1610	421A	13
1-31650-0010	502	04
1-31650-0010	502A	04
1-31650-0010	502B	04
1-31650-0010	555	01
1-31650-0010	555A	01
1-31650-1110	555	01
1-31650-1110	555A	01
1-31650-1120	555	02
1-31650-1120	555A	02
1-32710-1650	202	23
1-32710-1650	202A	19
1-36420-1171	421	22
1-36420-1171	421A	21
1-38710-1630	202	24
1-38710-1630	202A	20
1-39210-1350	701	18
1-39210-1360	705	20
1-41010-1210	811	27
1-41010-1220	811	09
1-41010-1230	811	14
1-41010-1240	811	10
1-41010-1250	811	03
1-41010-1260	811	04
1-41010-1270	811	07
1-41010-1280	811	01
1-41010-1290	811	21
1-41010-1300	811	05
1-41010-1310	811	13
1-41010-1320	811	24
1-41010-1330	811	22
1-41010-1350	811	12
1-41010-1350	811	19
1-41010-1360	811	26

PARTS No.	FIG. No.	INDEX
1-41520-1820	202	02
1-41520-1820	202A	02
1-43210-1520	705	25
1-43210-1520	705A	24
1-45340-1180	311	08
1-45350-1190	311	09
1-46210-1520	705	23
1-46210-1520	705A	21
1-48150-1130	121	11
1-48150-1130	121A	11
1-50010-3210	801	12A
1-50010-3210	811	12A
1-50100-3000	101	01
1-50100-3000	101A	01
1-50110-3110	101	02
1-50110-3110	101A	02
1-50110-3120	101	05
1-50110-3120	101A	05
1-50120-0030	111	01
1-50120-0030	111A	01
1-50120-1120	111	01
1-50120-1120	111A	01
1-50120-1130	111	01
1-50120-1130	111A	01
1-50120-3310	111	06
1-50120-3310	111A	06
1-50120-3320	111	07
1-50120-3321	111A	07
1-50120-3330	111	08
1-50120-3330	111A	08
1-50120-3340	111	09
1-50120-3340	111A	09
1-50120-3350	111	10
1-50120-3350	111A	10
1-50120-3360	111	13
1-50120-3360	111A	13
1-50130-1400	115	15
1-50130-1401	115A	16
1-50130-1402	115A	16
1-50130-1410	115	28
1-50130-1410	115A	29
1-50130-1410	115A	32
1-50130-1410	115A	41
1-50130-3120	115	06
1-50130-3120	115A	06
1-50130-3210	115	07
1-50130-3210	115A	07
1-50130-3220	115	08
1-50130-3220	115A	08
1-50130-3230	115	09

PARTS No.	FIG. No.	INDEX
1-50130-3230	115A	09
1-50130-3240	115	10
1-50130-3240	115A	10
1-50130-3330	115A	33
1-50140-0030	101	13
1-50140-0030	101A	15
1-50140-3110	101	14
1-50140-3110	101A	16
1-50140-3120	101	22
1-50140-3120	101A	24
1-50140-3130	101	23
1-50140-3130	101A	25
1-50140-3140	101	24
1-50140-3140	101A	26
1-50140-3180	101	18
1-50140-3180	101A	20
1-50140-3250	101	26
1-50140-3250	101A	29
1-50140-3260	101	27
1-50140-3260	101A	30
1-50140-3270	101	34
1-50140-3270	101A	40
1-50140-3310	101	31
1-50140-3310	101A	34
1-50140-3320	101	32
1-50140-3320	101A	35
1-50150-0031	121A	01
1-50150-3111	121A	01
1-50150-3210	121	17
1-50150-3220	121	18
1-50150-3230	121	19
1-50150-3240	121	20
1-50150-3310	121	24
1-50150-3320	121	25
1-50150-3330	121	26
1-50150-3340	121	27
1-50160-1130	105	10
1-50160-1130	105A	10
1-50160-3150	105	15
1-50160-3151	105A	15
1-50160-3151	105B	12
1-50160-3160	105	16
1-50160-3160	105A	16
1-50160-3160	105B	13
1-50160-3210	105	12
1-50160-3210	105A	12
1-50160-3210	105B	09
1-50210-0010	711	09
1-50210-0020	711	11
1-50210-0020	711A	12

PARTS No.	FIG. No.	INDEX
1-50210-1420	711	05
1-50210-1420	712	05
1-50210-1750	701	06
1-50210-1750	701A	06
1-50210-1750	701B	06
1-50210-1810	712	06
1-50210-1830	711	10
1-50210-1830	711A	11
1-50210-3110	701	01
1-50210-3110	701A	01
1-50210-3110	701B	01
1-50210-3120	701	09
1-50210-3120	701A	09
1-50210-3120	701B	09
1-50210-3130	701	14
1-50210-3130	701A	14
1-50210-3131	701B	14
1-50210-3150	711	16
1-50210-3150	711A	20
1-50210-3160	701	03
1-50210-3160	701A	03
1-50210-3160	701B	03
1-50210-3210	701	11
1-50210-3210	701A	11
1-50210-3210	701B	11
1-50210-3250	701	13
1-50210-3250	701A	13
1-50210-3250	701B	13
1-50210-3310	715	04
1-50210-3310	715A	04
1-50210-3320	715	05
1-50210-3320	715A	05
1-50210-3350	715	13
1-50210-3350	715A	13
1-50210-3410	711	01
1-50210-3410	711A	01
1-50210-3410	712	01
1-50210-3410	715	20
1-50210-3410	715A	25
1-50210-3410	716	03
1-50210-3420	711	02
1-50210-3420	711A	02
1-50210-3420	712	02
1-50210-3430	711	03
1-50210-3430	711A	03
1-50210-3430	712	03
1-50210-3440	711	04
1-50210-3440	711A	04
1-50210-3440	712	04
1-50210-3450	715	12

PARTS No.	FIG. No.	INDEX
1-50210-3450	716	02
1-50210-3460	715	09
1-50210-3460	716	01
1-50210-3510	705	01
1-50210-3510	705A	01
1-50210-3520	712	09
1-50210-3530	712	10
1-50210-3570	121	04
1-50210-3570	121A	04
1-50210-3570	711	32
1-50210-3570	711A	41
1-50210-3570	712	17
1-50210-3580	711	33
1-50210-3580	711A	43
1-50210-3580	712	14
1-50210-3590	711	34
1-50210-3590	711A	42
1-50210-3590	712	13
1-50210-3620	705	12
1-50210-3620	705A	12
1-50210-3630	705	13
1-50210-3630	705A	13
1-50210-3640	705	14
1-50210-3640	705A	14
1-50210-3650	705	15
1-50210-3650	705A	15
1-50210-3660	705	16
1-50210-3660	705A	16
1-50210-3670	705	17
1-50210-3670	705A	17
1-50210-3680	705	18
1-50210-3680	705A	18
1-50210-3910	715	21
1-50210-3910	715A	26
1-50210-3910	716	04
1-50210-3920	715	22
1-50210-3920	715A	27
1-50210-3920	716	05
1-50310-1110	301	01
1-50350-1140	321	11
1-50350-1141	321	11
1-50410-3310	411	09
1-50410-3320	411	10
1-50420-1210	402	01
1-50420-1210	402A	01
1-50420-1220	402	04
1-50420-1220	402A	04
1-50510-3110	201	01
1-50510-3111	201A	01
1-50520-1550	202	03

PARTS No.	FIG. No.	INDEX
1-50520-2310	205	01
1-50520-3110	201	02
1-50520-3110	201A	02
1-50520-3120	201	03
1-50520-3120	201A	03
1-50520-3130	201	03
1-50520-3130	201A	03
1-50520-3150	201	04
1-50520-3150	201A	04
1-50520-3160	201	05
1-50520-3160	201A	05
1-50520-3170	201	09
1-50520-3171	201A	09
1-50520-3190	201	13
1-50520-3190	201A	14
1-50520-3210	203	01
1-50520-3211	203A	01
1-50520-3220	203	05
1-50520-3220	203A	09
1-50520-3230	203	09
1-50520-3230	203A	13
1-50520-3320	205	15
1-50520-3410	201	20
1-50520-3410	201A	21
1-50520-3510	204	01
1-50520-3540	202A	01
1-50520-3550	201	14
1-50520-3550	201A	15
1-50520-3580	204	05
1-50520-3610	121	32
1-50520-3610	121A	30
1-50520-3710	202	10
1-50520-3710	202A	06
1-50520-3810	555	03
1-50520-3810	555A	03
1-50610-0010	105	01
1-50610-0020	105	03
1-50610-0020	105A	03
1-50610-0020	105B	03
1-50610-0200	105A	01
1-50610-0200	105B	01
1-50620-0030	504	01
1-50620-0030	504A	01
1-50620-0030	504B	01
1-50620-0030	712	12
1-50620-1710	421	24
1-50620-1710	421A	23
1-50660-0030	551	01
1-50660-3110	551	01
1-50670-2110	503	03

PARTS No.	FIG. No.	INDEX
1-50670-2120	503	04
1-51130-1170	115	34
1-51150-1130	121	02
1-51150-1130	121A	02
1-51150-1140	121	03
1-51150-1140	121A	03
1-51150-1180	121	03
1-51150-1180	121A	03
1-51410-1130	411	01
1-51610-1110	105	02
1-51610-1110	105A	02
1-51610-1110	105B	02
1-51610-1120	105	04
1-51610-1120	105A	04
1-51610-1120	105B	04
1-57010-3180	801	22
1-57710-1310	601	10
1-57710-2610	202	22
1-57710-2610	202A	18
1-64130-3010	111	15
1-64130-3010	111A	19
NK0205-05008	111A	16
NK0294-06000-a	711A	22
NK0547-08000-0	121A	09
NK0564-16150-L	505B	38
NK0750-06015-0	121A	21
NK0750-11016-0	121A	08
NK0753-08037-0	121A	18
NK0753-08040-0	121A	19
NK0753-08050-0	121A	17
NK0755-95035-0	121A	07
NK0760-08500-0	121A	22
NK0800-25030-0	705A	27
NK0805-50250	504B	21
NK0809-17040-B	502B	17
NK0809-24083-B	501B	24
NK0813-07007	101A	27
NK0827-45020	504B	19
NK0827-45020	504B	19
NK0827-60020	504B	20
NK0827-60050	504B	20
NK0880-15035-0	121A	25
NK0880-15036-0	121A	24
NK0880-15045-0	121A	23
NK0880-15095-0	121A	26
NK905-00140	711A	05
NK905-00140	712	05
NKS012-01611	711A	29
NKS012-01625	715A	12
NKS012-01625	716	02

PARTS No.	FIG. No.	INDEX
NKS012-01626	715A	09
NKS012-01626	716	01
NKS012-01627	715A	14
NKS012-01628	711A	14
NKS012-01641	203A	02
NKS012-01646	201A	25
NKS012-01647	715A	21
NKS012-01657	711A	30
NKS012-01658	201A	29
NKS012-01675	711A	10
NKS012-01675	712	06
NKS042-00392	101	46
NKS042-00392	101A	49
NKS042-00395	121	29
NKS042-00395	121A	27
NKS042-00397	121	30
NKS042-00397	121A	28
NKS042-00448	121	31
NKS042-00448	121A	29
NKS042-00904	105B	08
NKS042-00906	121A	20
NKS042-00908	101A	36
NKS042-00909	101A	37
NKS042-00914	101	48
NKS042-00914	101A	51
NKS042-00938	101A	41
NKS042-00941	101A	38
NKS042-00946	101A	49
NKS043-00740	111A	15
NKS052-01265	402B	34
NKS062-01199	402B	07
NKS062-01200	402B	01
NKS062-01201	402B	04
NKS062-01279	402B	05
NKS062-01284	401A	07
NKS402-00900	101	47
NKS402-00900	101A	50

PARTS No.	FIG. No.	INDEX

RUBBER CRAWLER CARRIER MST−600VD PARTS LIST

Document No.PE10600VD3-04
Fourth edition: July 15, 2013

Issued by Morooka Co., Ltd.
358 Shoubeisindencho, Ryugasaki,
Ibaraki 301-0034,
Japan

No part of this manual can be reproduced in any from without permission

HYDRAULIC COMPONENT
MST600VD SERIAL NO. 60301 and UP

INDX		DESCRIPTION	Q'TY	NOTE
1		HYDRAULICK OIL TANK	1	
	1-1	AIR BREATHER AND FILL CAP	1	
	1-2	OIL LEVEL GAUGE	1	
2		SUCTION FILTER	1	
3		GEAR PUMP	1	
4		DUMP CONTROL VALVE	1	
	4-1	MAIN RELIEF VALVES	(1)	
	4-2	CHECK VALVES	(1)	
	4-3	OVER LOAD RELIEF VALVES (UP)	(1)	
	4-4	OVER LOAD RELIEF VALVE S(DOWN)	(1)	
5		DUNP CYLINDER	1	
6		CHARGE LINE FILTER	1	
7		LOW PRESSUER SWITCH	1	
8		MAIN PUMP	1	
	8-1	PISTON PUMP	(2)	
	8-2	HIGH PRESSURE RELIEF VALVES	(4)	
	8-3	CHARGE PRESSURE RELIEF VALVE	(1)	
	8-4	P-PORT CONTROL ORIFICE	(2)	
	8-5	T-PORT CONTROL ORIFICE	(2)	
	8-6	DISPLACEMENT CONTROL VALVE	(2)	
9		HYDRAULIC MOTOR R.H.	1	
	9-1	REDUCTON GEAR	(1)	
	9-2	PISTON MOTORS	(1)	
	9-3	PARKING BRAKE	(1)	
	9-4	Hi-Lo SHIFT SPEED	(1)	
	9-5	CHARGE RELIEF VALVES	(1)	
	9-6	SHUTTLE VALVES	(1)	
10		HYDRAULIC MOTOR L.H	1	
	10-1	REDUCTON GEAR	(1)	
	10-2	PISTON MOTORS	(1)	
	10-3	PARKING BRAKE	(1)	
	10-4	Hi-Lo SHIFT SPEED	(1)	
	10-5	CHARGE RELIEF VALVES	(1)	
	10-6	SHUTTLE VALVES	(1)	
11		SOLENOID VALVES (PARKING BRAKE AND Hi-Lo SHIFTSPEED)	1	
	11-1	PARKING BRAKE	(1)	
	11-2	Hi-Lo SHIFT SPEED	(1)	
12		OIL COOLER	1	

MST-600VD HYDRAULIC SYSTEM SCHEMATIC SERIAL NO. 60301 AND UP

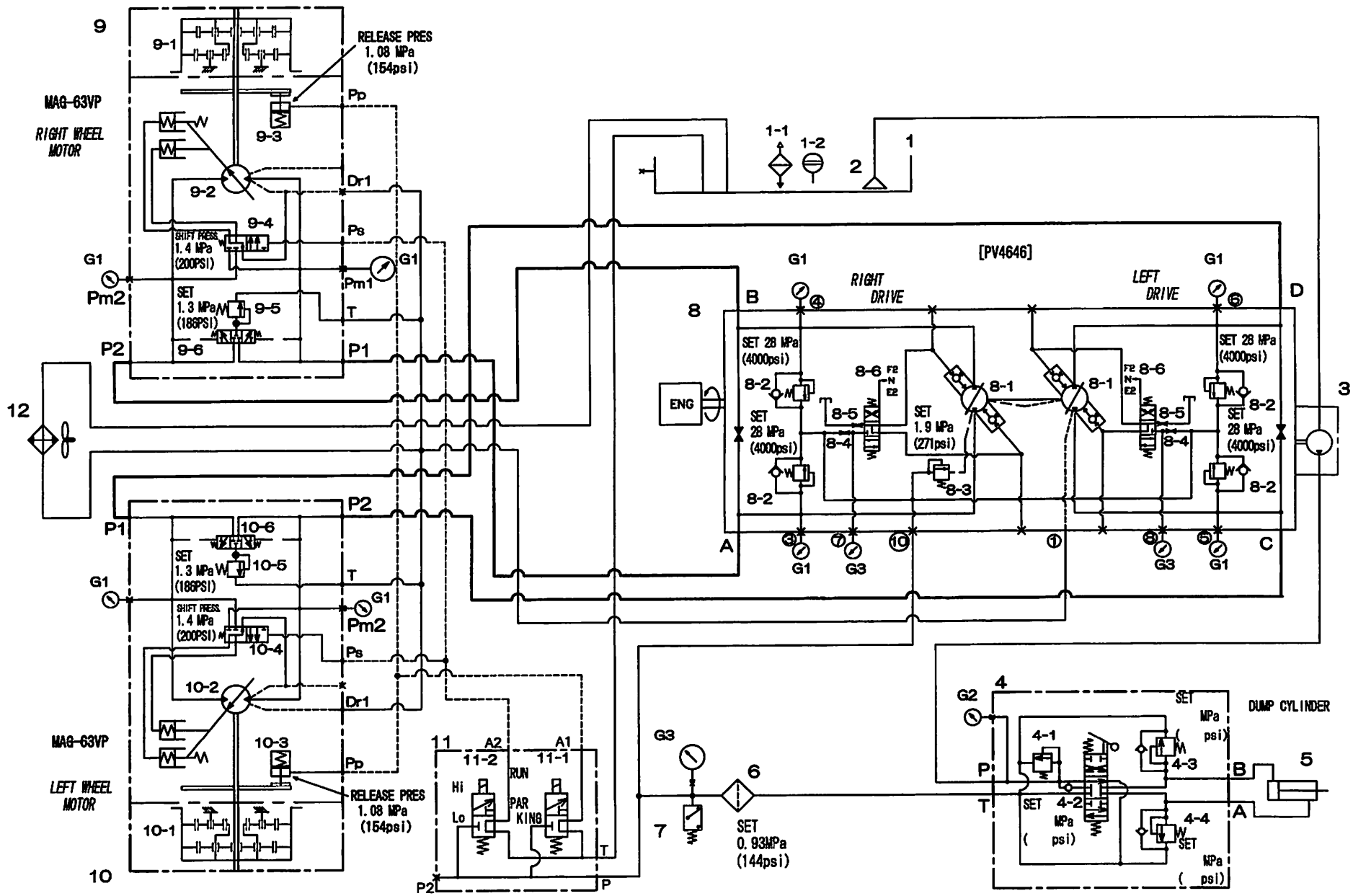

MST600ENG-00A

TRAVEL MOTOR
走行モータ (MAG−63VP−610)

MST−550 適用号機55001〜 MST-600V MST-600VD

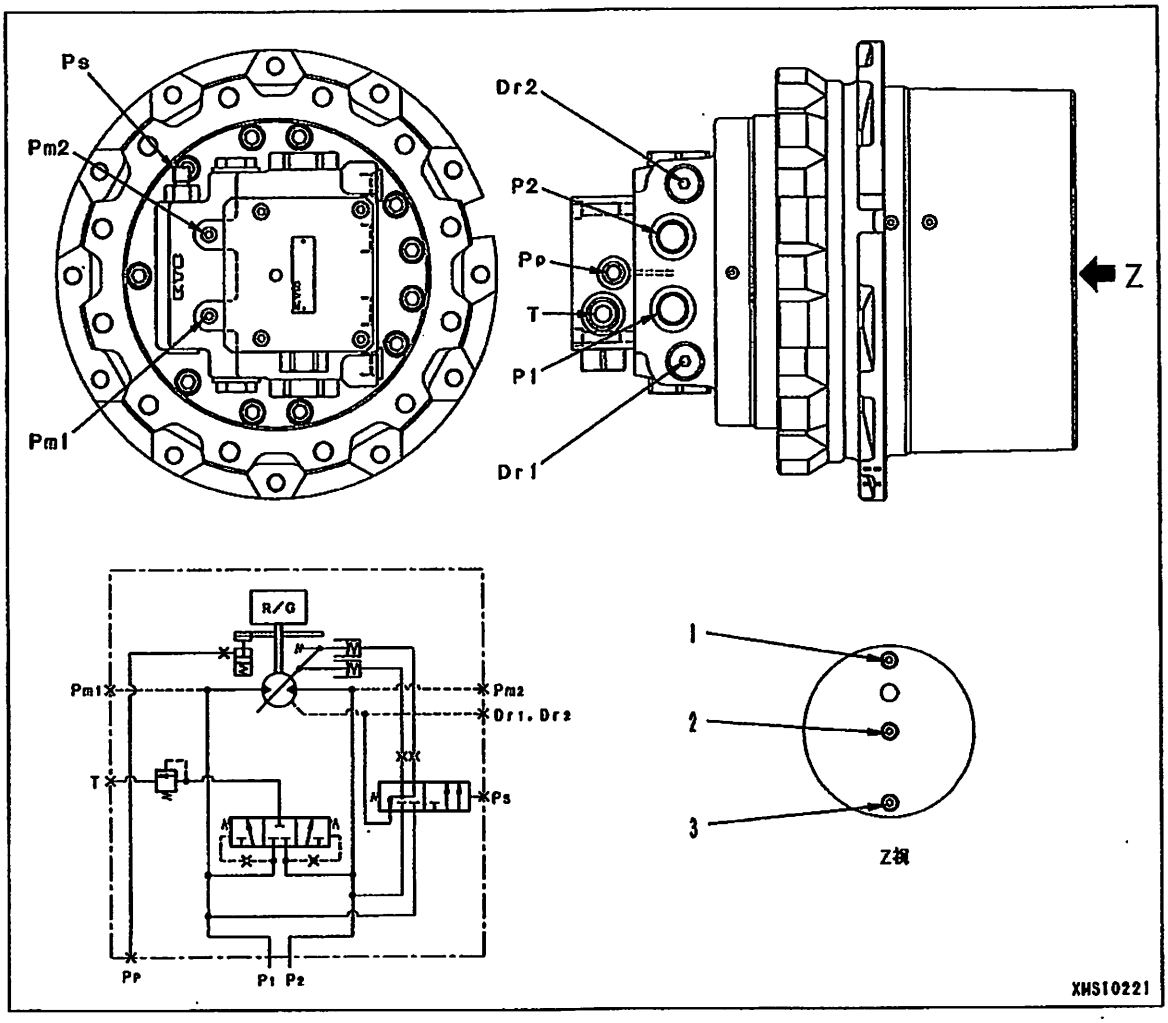

1. 給油口プラグ(PT3/8) Plug, filling
2. 検油口プラグ(PT3/8) Plug, check
3. 排油口プラグ(PT3/8) Plug, drain

P1. メインポンプポートA2またはB1から(左回転) From A2 or B1 Main pump port (Left rotation)
P2. メインポンプポートA1またはB2から(右回転) From A1 or B2 Main pump port (Right rotation)
Pp. 駐車ブレーキ解除ポート Port, parking brake release
Ps. 高低速切換ソレノイドバルブから From H/L solenoid valve
T. オイルクーラへ To oil cooler
Dr1. オイルクーラへ To oil cooler
Dr2. オイルクーラへ To oil cooler
Pm1. 圧力検出口(PT1/4) Port, pressure check
Pm2. 圧力検出口(PT1/4) Port, pressure check

概　要

- 走行モータは、メインフレームの左右前方に装着され、メインポンプからの油量にみあって回転し、外周に取り付けたスプロケットがゴムクローラを駆動させ、車両を走行、旋回させる。
- 走行モータは、斜板式、定容量式、高低速切換機構付き、ディスク式の駐車ブレーキ付きピストンモータを採用している。
  また、減速機は、遊星歯車式を採用している。
- 走行モータには、フラッシングバルブ(シャトルバルブと低圧リリーフバルブの組合せ)が組み込まれており、走行モータの高圧回路の低圧になった側(吸込み側)のオイルの一部(低圧リリーフバルブの規定圧より高くなった分)をオイルクーラに流し、冷却・浄化を行っている。
- 高低速切換機構は、走行モータの斜板の傾角を切り換えることによって回転速度の上限の設定を転換し、軽負荷時には高速走行するなど作業負荷に見合った走行速度を得て、作業効率の向上を実現している。
- 斜板角の切り換えは、運転席の高低速レンジ切換スイッチを「高速」位置に操作し、ソレノイドバルブからポートPsにオイルを流入させ、傾転ピストンを押し出して斜板の傾角を小さく(高速側)する。
- 駐車ブレーキは、走行モータ内部のピストンモータ部と減速機部の中間に装着されている。
  形式は、ディスク式、スプリング加圧式を採用している。
- 駐車ブレーキの解除操作は、運転席の駐車ブレーキスイッチを「走行」位置に操作し、ソレノイドバルブからポートPpにオイルを流入させてブレーキピストンを押し出し、スプリングの張力に打ち勝ってブレーキが解除される。
- 以上のように、駐車ブレーキは油圧によって解除されるため、エンジンが停止状態では駐車ブレーキスイッチの操作位置に係わらず、駐車ブレーキはスプリングの張力よって作動した状態になる。
  この場合の駐車ブレーキの手動解除方法については「点検・調整」の項を参照する。
- 高低速切換回路および駐車ブレーキ解除回路の圧力は、メインポンプに内蔵されたチャージリリーフバルブによって23kgf/cm²に規定されている。

- 下表は、走行モータの性能を表す。
  なお、高圧リリーフバルブは、メインポンプ側に装着されている。

項　　目	基準値
吐出量 (cc/rev)	63.3/57.3
高圧リリーフ圧 (kgf/cm²)	286
最高出力回転 (rpm)	57/97
低圧リリーフ圧 (kgf/cm²)	15~18
2段切換圧 (kgf/cm²)	10以上
駐車ブレーキ解除圧 (kgf/cm²)	13以上

Item	STD.value
Inhalation value (cc/rev)	63.3/57.3
High pressure relief pressure (kgf/cm²)	286
Max. output rotation	57/97
Low pressure relief pressure (kgf/cm²)	15~18
H-L change pressure (kgf/cm²)	Above 10
Parking brake release pressure (kgf/cm²)	Above 13

高低速切換バルブ部 H-L speed change valve

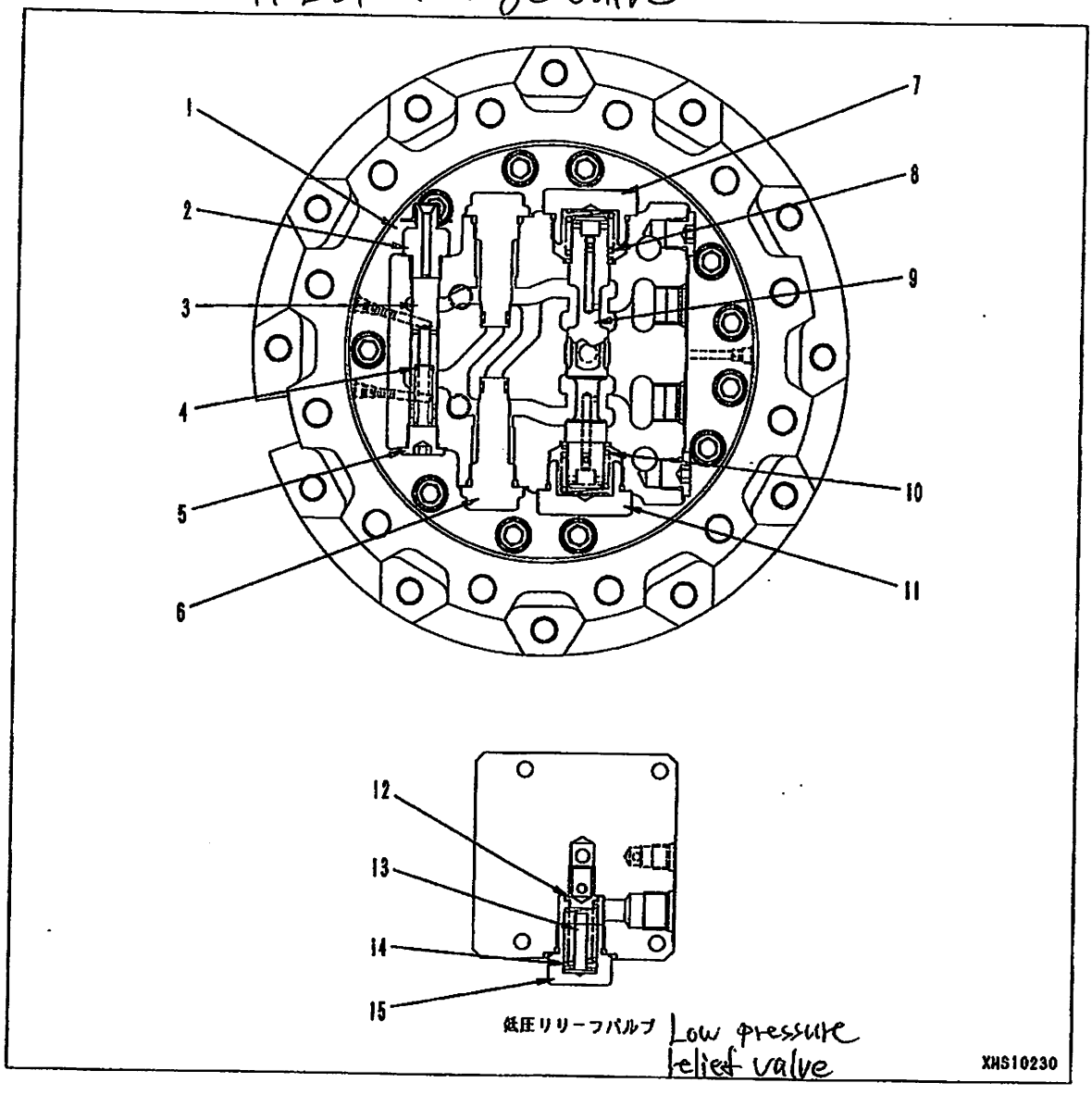

1. ベースプレート Base plate
2. プラグ Plug
3. 高低速切換スプール H-L speed change spool
4. スプリング Spring
5. プラグ Plug
6. プラグ Plug
7. プラグ Plug
8. スプリング Spring
9. シャトルスプール Shuttle spool
10. スプリング Spring
11. プラグ Plug
12. 低圧リリーフバルブポペット Low pressure relief valve rivet
13. スプリングシート Spring sheet
14. スプリング Spring
15. プラグ Plug

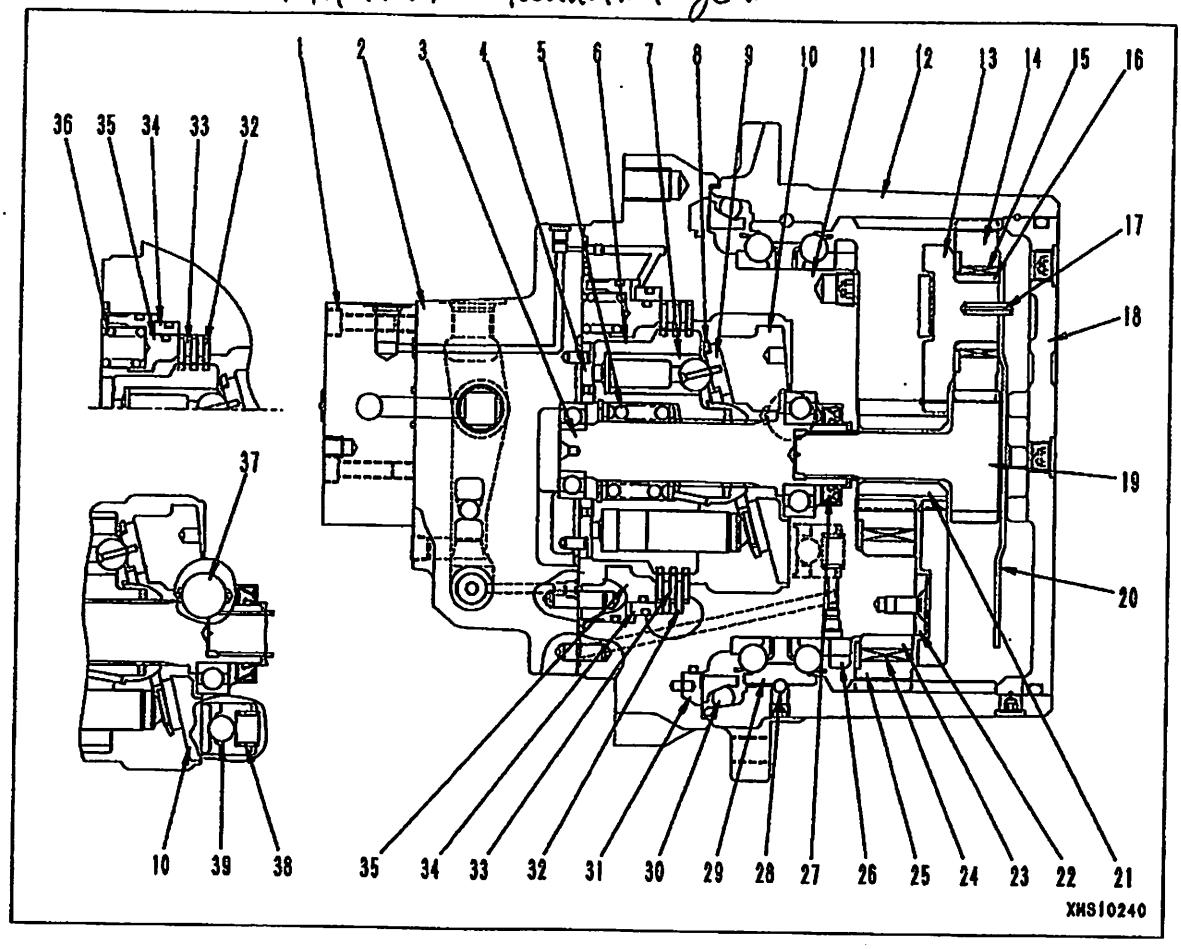

1. 低圧リリーフバルブ
2. ベースプレート
3. ドライブシャフト
4. バルブプレート
5. スプリング
6. シリンダブロック
7. ピストン
8. リテーナプレート
9. シュー
10. 斜　板
11. フランジホルダ
12. ハウジング
13. ホルダ
14. プラネタリギヤー
15. ローラ
16. インナレース
17. スプリングピン
18. カバー
19. ドライブギヤー
20. スラストプレート
21. サンギヤー
22. スラストプレート
23. カラー
24. ローラ
25. プラネタリギヤー
26. リングナット
27. オイルシール
28. ボール
29. ベアリング
30. フローティングシール
31. シールシート
32. 駐車ブレーキプレート
33. 駐車ブレーキディスク
34. カラー
35. ブレーキピストン
36. スプリング
37. ボール
38. スプリング
39. 傾転ピストン

1. Low pressure relief valve
2. Base plate
3. Drive shaft
4. Valve plate
5. Spring
6. Cylinder block
7. Piston
8. Retainer plate
9. Shoe
10. Swash plate
11. Flange holder
12. Housing
13. Holder
14. Planetary gear
15. Roller
16. Inner lathe
17. Spring pin
18. Cover
19. Drive gear
20. Thrust plate
21. Sun gear
22. Thrust plate
23. Collar
24. Roller
25. Planetary gear
26. Ring nut
27. Oil seal
28. Ball
29. Bearing
30. Floating seal
31. Seal sheet
32. Parking brake plate
33. Parking brake disc
34. Collar
35. Brake piston
36. Spring
37. Ball
38. Spring
39. Piston

PV4646-542

Pump Spec.

◎Max. emission per 1 rev : 45.9cm3/rev (cc/rev)

◎Max. use pressure : 34.3MPa (350kgf/cm2)

◎Max. case pressure : 0.2MPa (1.8kgf/cm2)

◎Max. Temp. in the case : 82℃

◎Max. revolution : 4000min-1 (rpm)

◎High pressure relief valve set pressure : at 20 L/min

1.5~1.8MPa (15.4=16.8kgf/cm2)

◎Charge pump emission : 22.9cm3/rev (cc/rev)

◎PTO shaft permissible torque : Set – 124.3N.m (12.6kgf · m)

Max. – 248.1N.m (25.3kgf · m)

◎Applicable Filter : 10u

◎Control orifice : (Supply side) None

(Drain side) ϕ 1.17

◎Charge pump : None

◎Bypass valve Orifice Diameter : None

◎Applicable HYD. Oil : Durable HYD.Oil

Above −10℃ : ISO VG 46

Below −10℃ : ISO VG 32

◎Pollution degree of HYD. Oil : Less NAS 9 Grade

◎Gear pump permissible : 25cc/rev

◎Weight : 60kgf

Direction of Shaft rotation		Right rotation.	
Direction of Handle		E 1	F 1
Direction of Port (oil flow)	A	Emission	Suction
	B	Suction	Emission
Direction of Handle		E 2	F 2
Direction of Port (oil flow)	C	Emission	Suction
	D	Suction	Emission

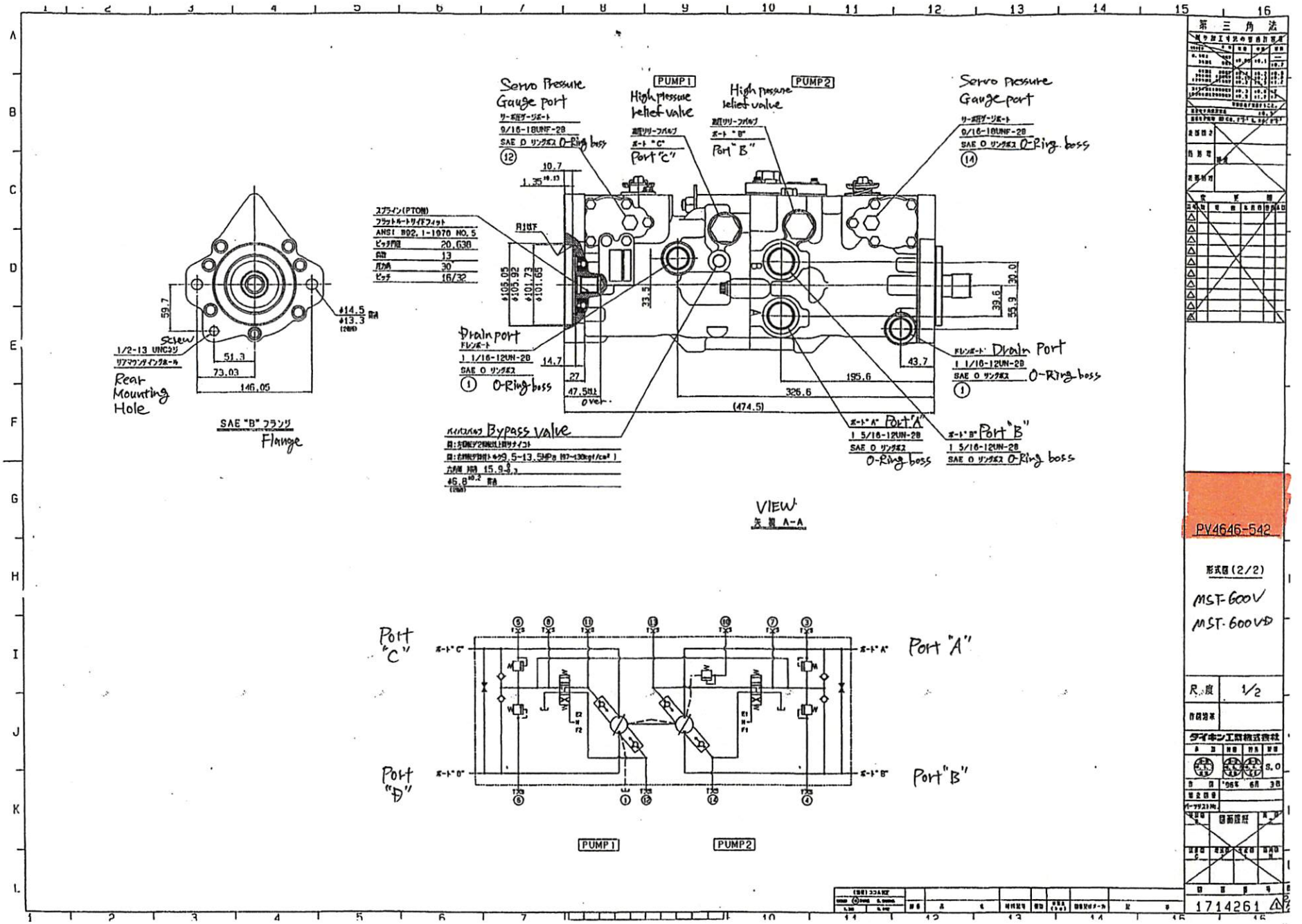

Servo Pressure Gauge port
サーボ圧ゲージポート
9/16-18UNF-2B
SAE O リングボス O-Ring boss
12
PUMP1
High pressure relief valve
高圧リリーフバルブ
ポート "C"
Port "C"
PUMP2
High pressure relief valve
高圧リリーフバルブ
ポート "B"
Port "B"
Servo Pressure Gauge port
サーボ圧ゲージポート
9/16-18UNF-2B
SAE O リングボス O-Ring boss
14
スプライン(PTO側)
フラットルートサイドフィット
ANSI B92.1-1970 NO.5
ピッチ円径 20.638
歯数 13
圧力角 30°
ピッチ 16/32
Drain port
ドレンポート
1 1/16-12UN-2B
SAE O リングボス
1 O-Ring boss
Screw
1/2-13 UNCネジ
リアマウンティングホール
Rear Mounting Hole
SAE "B" フランジ
Flange
Bypass valve
バイパスバルブ
ポート"A" Port "A"
1 5/16-12UN-2B
SAE O リングボス
O-Ring boss
ポート"B" Port "B"
1 5/16-12UN-2B
SAE O リングボス O-Ring boss
ドレンポート Drain Port
1 1/16-12UN-2B
SAE O リングボス O-Ring boss
1
VIEW
矢視 A-A
Port "C"
Port "A"
Port "D"
Port "B"
PUMP1
PUMP2
第三角法
PV4646-542
形式図(2/2)
MST-600V
MST-600VD
R.度 1/2
ダイキン工業株式会社
1714261

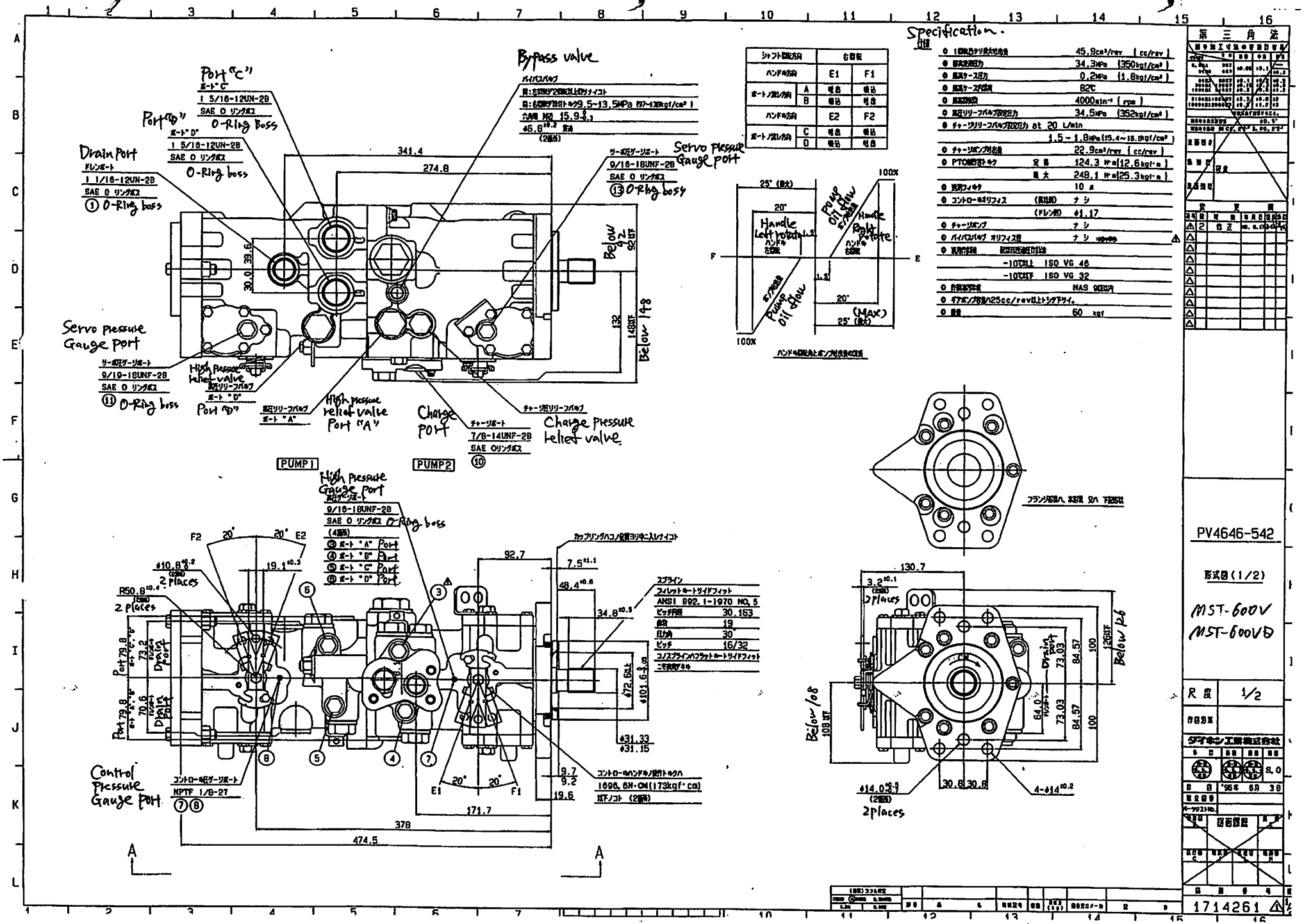

Port "C"
ポート"C"
1 5/16-12UN-2B
SAE O リングボス
O-Ring Boss
Port "D"
ポート"D"
1 5/16-12UN-2B
SAE O リングボス
O-Ring boss
Drain Port
ドレンポート
1 1/16-12UN-2B
SAE O リングボス
① O-Ring boss
Bypass valve
バイパスバルブ
Servo pressure Gauge port
9/16-18UNF-2B
SAE O リングボス
⑬ O-Ring boss
Servo pressure Gauge port
9/19-18UNF-2B
SAE O リングボス
⑪ O-Ring boss
High pressure relief valve
Port "D"
High pressure relief valve Port "A"
Charge port
チャージポート
7/8-14UNF-2B
SAE Oリングボス
⑩
Charge pressure relief valve
チャージ圧リリーフバルブ
341.4
274.8
Below 92
Below 148
132
148
PUMP1
PUMP2
High pressure Gauge port
9/16-18UNF-2B
SAE O リングボス O-Ring boss
③ ポート "A" Port
④ ポート "B" Port
⑤ ポート "C" Port
⑥ ポート "D" Port
F2
E2
E1
F1
20°
19.1
92.7
7.5
48.4
34.8
R50.8
2 places
Port 79.8
Drain Port
73.2
70.6
Control Pressure Gauge port
コントロール圧ゲージポート
NPTF 1/8-27
⑦⑧
171.7
378
474.5
9.7
9.2
19.6
コントロールハンドルノ操作トルクハ
1696.6N·CM(173kgf·cm)
ノコト (2箇所)
スプライン
フィレットルートサイドフィット
ANSI B92.1-1970 NO.5
ピッチ円径 30.163
歯数 19
圧力角 30°
ピッチ 16/32
コノスプラインハフラットルートサイドフィット
ニモ表面ヅキル
φ72.6
φ101.6
φ31.33
φ31.15
A
A
Specification.
仕様
45.9cm³/rev (cc/rev)
34.3MPa (350kgf/cm²)
0.2MPa (1.8kgf/cm²)
82℃
4000min⁻¹ (rpm)
34.5MPa (352kgf/cm²)
チャージリリーフバルブ設定圧力 at 20 L/min
1.5 ~ 1.8MPa (15.4~18.8kgf/cm²)
22.9cm³/rev (cc/rev)
PTO軸許容トルク 定格 124.3 N·m (12.6kgf·m)
最大 248.1 N·m (25.3kgf·m)
10 μ
コントロールオリフィス (高圧用) ナシ
(ドレン用) φ1.17
チャージポンプ ナシ
バイパスバルブ オリフィス型 ナシ
-10℃以上 ISO VG 46
-10℃以下 ISO VG 32
NAS 9位以内
ギアポンプ容量ハ25cc/rev以上トシテ下サイ。
60 kgf
25° (最大)
20°
100%
Handle Left rotate
Handle Right rotate
Pump oil flow
F
E
(MAX)
ハンドル回転角とポンプ吐出量の関係
フランジ形状ハ、本形状 又ハ 下図形状
130.7
3.2
2 places
Below 126
Below 108
Drain port
73.03
84.57
100
126
64.0
φ14.0
2 places
30.8
30.8
4-φ14
第三角法
PV4646-542
形式図(1/2)
MST-600V
MST-600VD
尺度 1/2
ダイキン工業株式会社
1714261

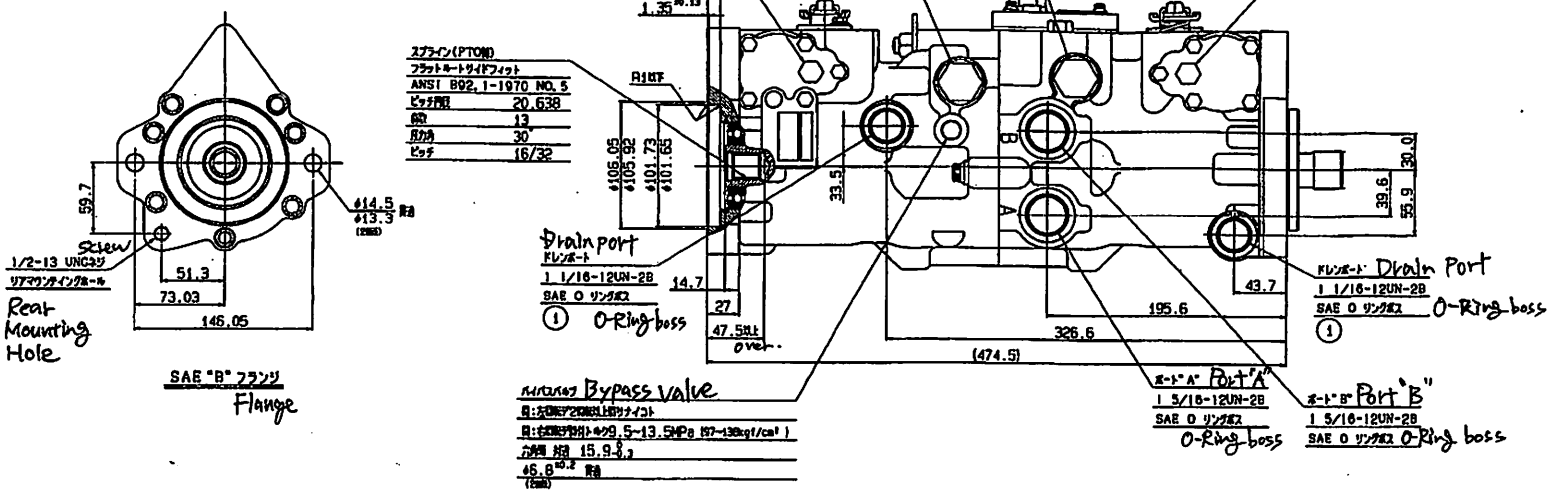

PV4646-542

形式図(2/2)

MST-600V

MST-600VD

R.度 1/2

ダイキン工業株式会社

S.O

'96年 6月 3日

1714261

PV4646-542

Pump Spec.

◎Max. emission per 1 rev : 45.9cm3/rev (cc/rev)

◎Max. use pressure : 34.3MPa (350kgf/cm2)

◎Max. case pressure : 0.2MPa (1.8kgf/cm2)

◎Max. Temp. in the case : 82℃

◎Max. revolution : 4000min-1 (rpm)

◎High pressure relief valve set pressure : at 20 L/min

1.5~1.8MPa (15.4=16.8kgf/cm2)

◎Charge pump emission : 22.9cm3/rev (cc/rev)

◎PTO shaft permissible torque : Set – 124.3N.m (12.6kgf · m)

Max. – 248.1N.m (25.3kgf · m)

◎Applicable Filter : 10u

◎Control orifice : (Supply side) None

(Drain side) ϕ 1.17

◎Charge pump : None

◎Bypass valve Orifice Diameter : None

◎Applicable HYD. Oil : Durable HYD.Oil

Above −10℃ : ISO VG 46

Below −10℃ : ISO VG 32

◎Pollution degree of HYD. Oil : Less NAS 9 Grade

◎Gear pump permissible : 25cc/rev

◎Weight : 60kgf

Direction of Shaft rotation		Right rotation.	
Direction of Handle		E 1	F 1
Direction of Port (oil flow)	A	Emission	Suction
	B	Suction	Emission
Direction of Handle		E 2	F 2
Direction of Port (oil flow)	C	Emission	Suction
	D	Suction	Emission

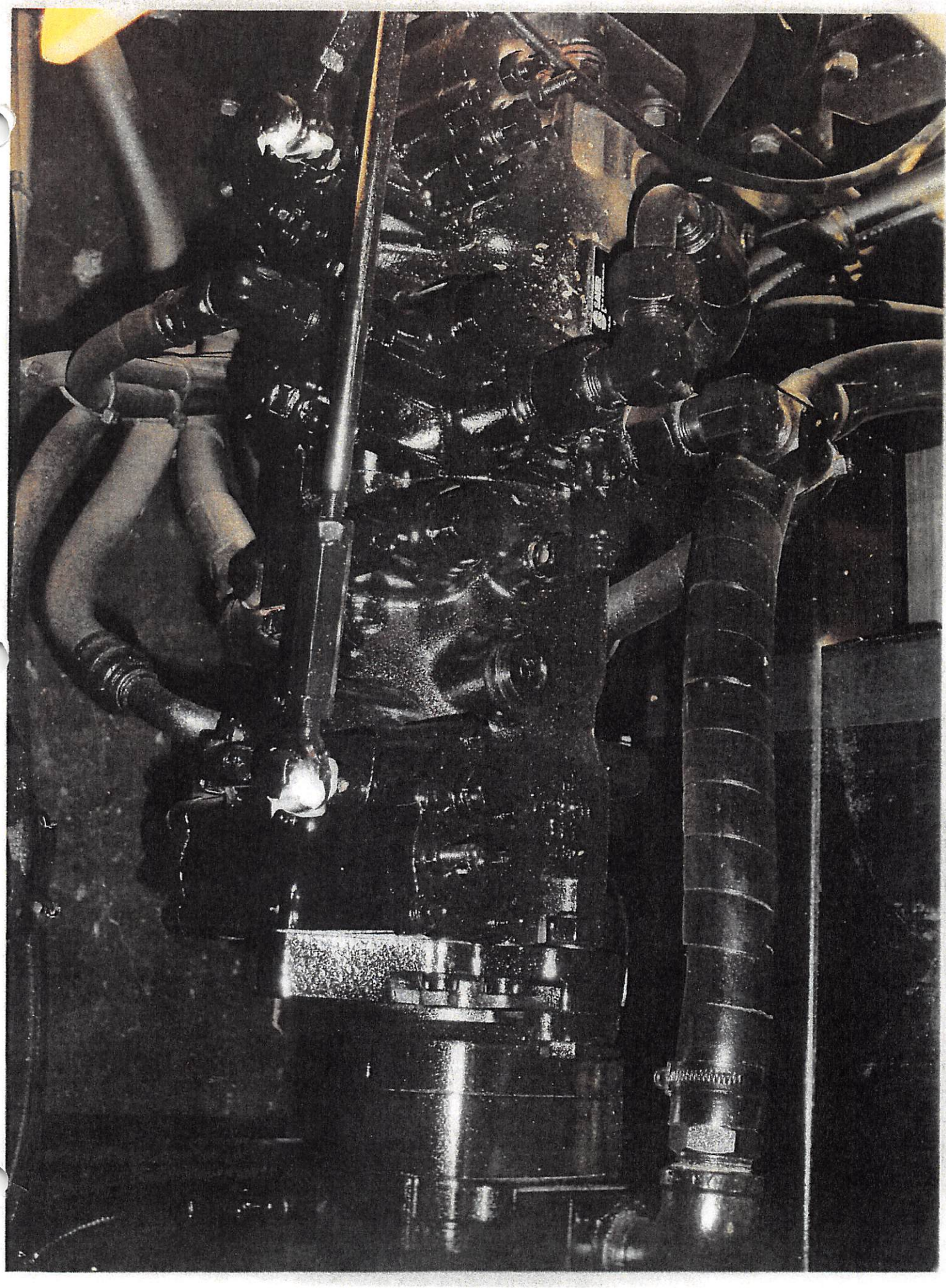

納入仕様図

PVM5151

朱印の上一部御返送下さい
上記日付迄に返却なき時は
本図により製作致します

提出月日 2010年7月7日
返却希望月日 2010年7月15日

ダンフォス・ダイキン株式会社

ハンドル回転方向	CW	CCW
ポートA 1/A 2 吸レ方向	OUT	IN
ポートB 1/B 2 吸レ方向	IN	OUT

- PV4646-542 の代替機 (for MST-600)
- 配管ポートサイズ 変更有
- 入力軸の互換性は有. 取付ボルト部チェック要.
  支持サポート要不要チェック
  (メーカーは不要との回答)
- 締付 3キロ
- 本体製作要
  (単品入庫可)

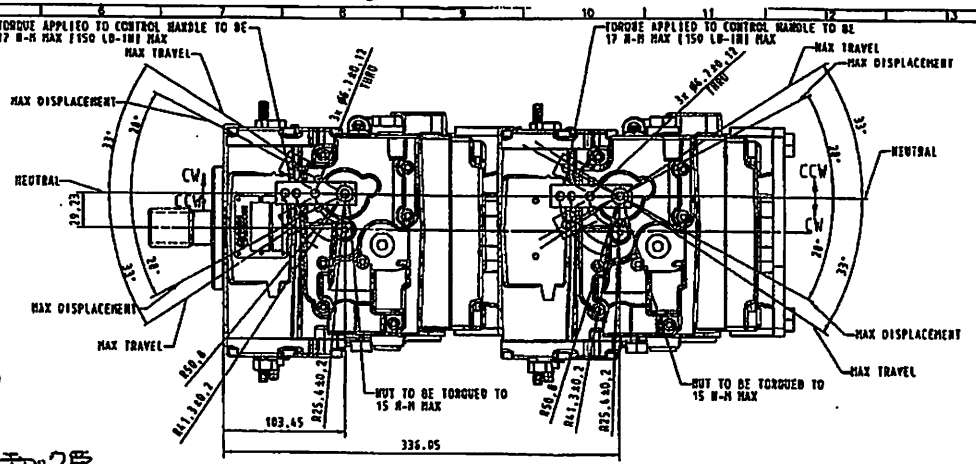

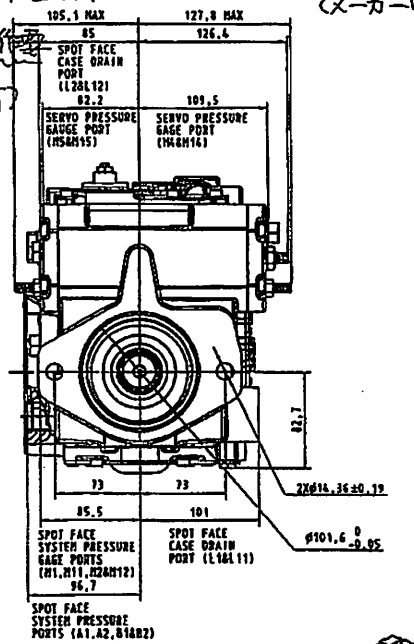

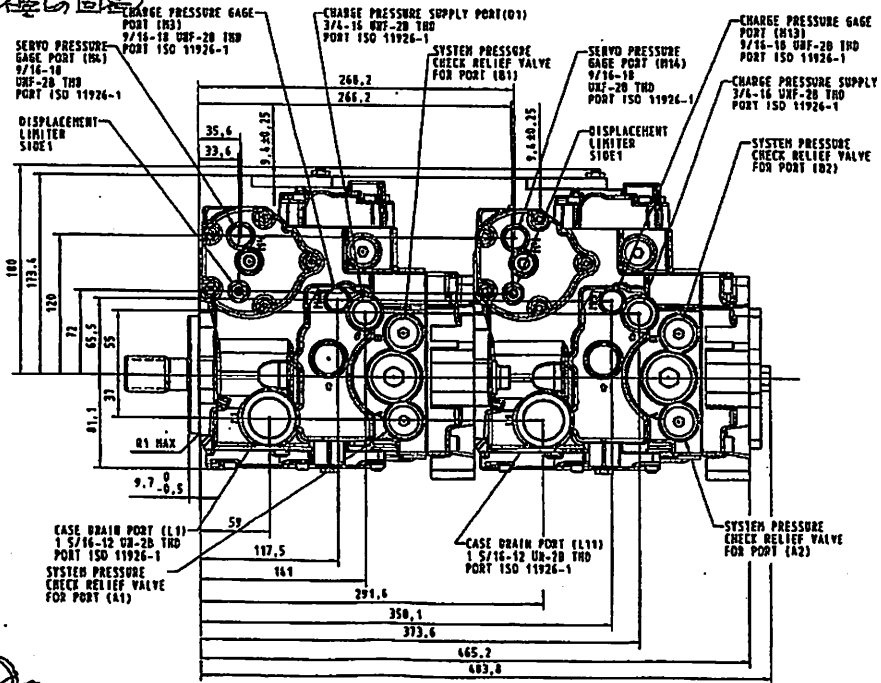

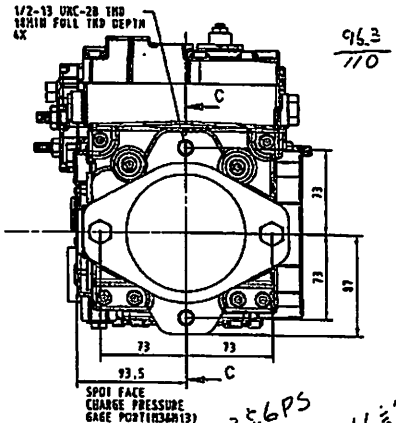

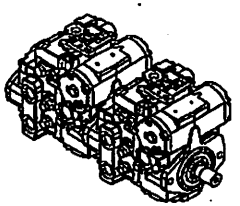

RO	NOTE UNLESS OTHERWISE SPECIFIED
仕様	
●	回転方向 入力軸から見て時計回り
●	一回転当たり最大吐出量 51.0cm³/rev (フロント・リアポンプ共)
●	最高定格圧力 32.5MPa
●	高圧リリーフ設定圧力 フロントリアポンプ共 30.0MPa at 3.8~5.6L/min
●	最高回転数 2900min⁻¹
●	ケース内圧力 瞬間最高(低温起動時)0.5MPa 定常最高 0.3MPa
●	チャージポンプ押シ
●	チャージリリーフ弁設定圧力 at 19L/min 2.0 (+0.3 -0.2) MPa (フロント・リアポンプ共)
●	コントロール HDC
	オリフィス サーボAφ1.0,サーボBφ1.0 ドレンAφ4.0,ドレンBφ4.0
●	取付締め付けボルト許容トルク(SAE 8.13T) 定常 124 N·m, 最大 248 N·m
●	温度 使用範囲 115℃ 定常最高 104℃
●	使用作動油 耐摩耗性作動油
	作動油粘度範囲
	最低 12~60mm²/s
	最適 設定 7 mm²/s
	最高 (低温始動時) 1600mm²/s
●	使用フィルター チャージ供給フィンニ. エレメント 10μ
●	質量 84kg
●	ソノ他、詳細寸法、仕様ニツイテハ 542ノTechnical Information ヲ参照下サイ.
●	PMC F:42RS1EAN2B02ANNNFNV3039NAANNNNNN R:42RS10AN2B02ANNNFNB3039NAANNNNNN

96.3/110 = 87.5%

60×1600/716 = 125.6PS

エンジン 96.3/125.6 = 0.766 ≒ 76%

T = 8×P/5.8 × 1/0.9 × 2.0
= 30 kg·m × 2 + 6P
= 60 kg·m

MST-600VD PVM5151

DRAWN	佐藤	SIZE	A3
CHECKED	小林	SCALE	1:2
APPROVED	小林	SHEET	1 OF 2

SAUER DANFOSS

PUMP-VAR-01SPL
11056390 42PV051 CW

542

70025561 A

PVM5151

Pump Spec.

Rev (From the view of input shaft) : Rightward rev

Max. exhalation per 1 revolution : 51.0cm3/rev
Max. use pressure : 32.5MPa

High pressure relief setting pressure : 30.0MPa at 3.8 ~ 5.6L/min

Max. revolution : 2,900min-1

Case pressure
Momentary Max. (Low Temp.starting) : 0.5MPa
Continuous Max. : 0.3MPa

Charge pump : None

Charge relief valve setting pressure at 19L/min :
2.0∓0.07MPa (Both Front pump and Rear pump)

Control : MDC

Orifice Servo A ϕ 1.0, Servo B ϕ 1.0

Drain A ϕ 4.0, Drain B ϕ 4.0

Rear support pad allowable torque (SAE B, 13T)

Continuity 124N・m, Maximum 248N・m

Temperature

Momentary Max. 115℃

Continuous Max. 104℃

Applicable Hyd.oil : Hyd. oil of durable
The range of Hyd.oil : Recommendation 12 ~ 60mm2 / S
Momentary Min. 7mm2 / S
Max. (Low Temp. starting) 1600mm2 / S

Applicable filter : 10u element in the charge supply line

Mass weight : 84kg

SAUER DANFOSS DAIKIN

SERVICE PARTS LIST
サービスパーツリスト

11058390 (PVM5151)

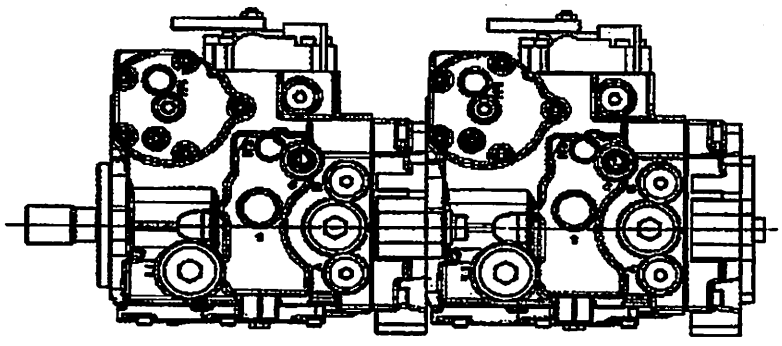

2011.12.21

Sauer-Danfoss-Daikin Ltd.

符号	理　由	担当	承認
ⓕ			
ⓔ			
ⓓ			
ⓒ			
ⓑ			
ⓐ			

変　更　欄

承認	検図	担当
SDD 12.1.13 小竹	SDD 12.1.13	SDD

資料No. **SB-01500**

11058390

SAUER DANFOSS DAIKIN

補用区分: A 単体対応、B アッセイ対応、C 対応不可

部番	部品図番	部品名称	個数		補用区分	ページ	備考
			フロント	リア			
Y001	1734097-02	シリンダーブロックキット	1	1	B	5/9	
T010	4700035	ピストンリング	1	1	A	8/9	
T051	4410119	サーボピストンアッセイ	1	1	B	8/9	
T060	336826	シールナット(M10)	1	1	A	8/9	
T070	4800573	チャージリリーフバルブアッセイ	1	1	B	8/9	
T040	502470	リリーフアジャスタブル	1	1	C	8/9	
T041	9003575-0101	ロックナット	1	1	C	8/9	
T042	1041419	スプリング	1	1	C	8/9	
T043	1030940	ポペット	1	1	C	8/9	
T050	9004201-6200	Oリング	1	1	C	8/9	
T080	1715229-02	スワッシュプレート	1	1	A	8/9	
T081	4410148	カムフォロワー ベアリングアッセイ	1	1	B	8/9	
T083	11060626	カムフォロワー ニードルベアリング	1	1	C	8/9	
H005	4800297	SCRバルブアッセイ, 300BAR	1	1	B	7/9	
H003	4800780	スプリング	1	1	A	7/9	
J005	4520056	SCRバルブアッセイ, 300BAR	1	1	B	7/9	
J003	4800780	スプリング	1	1	A	7/9	
K001	4800589	SCRプラグアッセイ	2	2	B	7/9	
K007	1724107	プラグ	2	2	C	7/9	
K008	9004201-6200	Oリング	2	2	C	7/9	
K009	9006110-0160	バックアップリング	2	2	C	7/9	
K010	9004105-0160	Oリング	2	2	C	7/9	
L001	1723900-01	サーボカバー	1	1	A	8/9	
L005	AAM0603001	六角穴付ボルト M6X30	5	5	A	8/9	
L010	9005100-5600	プラグアッセイ ストレートスレッド(9/16)	1	1	B	8/9	
L010A	9004201-3700	Oリング	1	1	C	8/9	
L020	1745312	スクリュー	1	1	A	8/9	
L025	612291	シールロックナット, M8X1	1	1	A	8/9	
L002	4410271	ガスケット	1	1	A	8/9	
M001	1723392-01	サーボカバー (調整付)	1	1	A	8/9	
M005	AAM0603001	六角穴付ボルト M6X30	5	5	A	8/9	
M010	9005100-5600	プラグアッセイ ストレートスレッド(9/16)	1	1	B	8/9	
M010A	9004201-3700	Oリング	1	1	C	8/9	
M020	1745312	スクリュー	1	1	A	8/9	
M025	612291	シールロックナット, M8X1	1	1	A	8/9	
M002	4410271	ガスケット	1	1	A	8/9	
E001	4006912	ガスケット	1	1	A	6/9	

11058390

SAUER DANFOSS DAIKIN

補用区分：A 単体対応、B アッセイ対応、C 対応不可

部番	部品図番	部品名称	個数		補用区分	ページ	備考
			フロント	リア			
C017	38315	Oリング	1	1	A	5/9	
C005	4410043	シャフトアッセイ,19T	1		B	5/9	
C005	4410027	シャフトアッセイ,15T		1	B	5/9	
C001	1716098	シャフト, 19T	1		A	5/9	
C001	1716096	シャフト,15T		1	A	5/9	
C002	9006300-0137	止め輪（リテイニングリング）	1		A	5/9	
C002	5000098	止め輪（リテイニングリング）		1	A	5/9	
C003	1735400	ローラーベアリング	1		A	5/9	
C003	1735399	ローラーベアリング		1	A	5/9	
C018	11013519	オイルシール	1		A	5/9	
C018	9008000-0131	オイルシール		1	A	5/9	
C020	11087319	キャリアーシール	1		A	5/9	
C020	1735155	キャリアーシール		1	A	5/9	
F006	1745710	ピン (4.8X15.8)	1	1	A	9/9	
F007	AAM0602001	六角穴付ボルト M6X20	2	2	A	9/9	
F012	AAM0603001	六角穴付ボルト M6X30	4	4	A	9/9	
F008	4410272	サイドカバーガスケット	1	1	A	9/9	
F091	9005110-9200	ソケットヘッドプラグアッセイ1 5/16	2	2	B	9/9	
F091A	9004201-9000	Oリング	2	2	C	9/9	
F093	9005110-5600	プラグアッセイ ストレートスレッド(9/16)	2	2	B	9/9	
F093A	9004201-3700	Oリング	2	2	C	9/9	
F096	5000114	止め輪（リテイニングリング）	1	1	A	5/9	
F1	4410287	ハウジングアッセイ	1	1	C	9/9	
F001	1716125-02	ハウジング	1	1	C	9/9	
F002	11060625	ベアリング	1	1	C	9/9	
F004	11060628	ニードルベアリング	1	1	C	9/9	
F2	4410143	サイドカバーアッセイ	1	1	B	9/9	
F003	1060628	ニードルベアリング	1	1	C	9/9	
F005	1715249-01	サイドカバー	1	1	C	9/9	
F098	AAM0602001	六角穴付ボルト M6X20	1	1	A	9/9	
F099	4800754	ブラケット	1	1	A	9/9	
U015	1724089	カップリング, 15T	1		A	7/9	
U015	1724088	カップリング, 13T		1	A	7/9	
U025	9004800-3708	ピン	2	2	A	7/9	
U035	AAM0803001	六角穴付ボルト M8X30	8	8	A	7/9	
U030	1716227	ガスケット	1	1	A	7/9	
U040	1714958-04	Bパッドアダプター	1	1	A	7/9	
U080	9004104-0440	Oリング	1	1	A	7/9	
U085	4460370	プレート		1	A	7/9	
U090	9007200-5016	六角ボルト 1/2X13		2	A	7/9	
U095	9007200-5024	六角ボルト 1/2	2		A	9/9	フロントポンプ、リアポンプ結合用
U096	SS2W04	スプリングワッシャー	2		A	9/9	
U097	1040407	ワッシャー	2		A	#####	

11058390

SAUER DANFOSS DAIKIN

補用区分: A 単体対応、B アッセイ対応、C 対応不可

部番	部品図番	部品名称	個数		補用区分	ページ	備考
			フロント	リア			
N006	1723373-01	バルブプレート	1	1	A	5/9	
G004	9005110-9200	プラグアッセイ 1 5/16-12	1	1	B	7/9	
G004A	9004201-9000	Oリング	1	1	C	7/9	
G010	4800644	スペーサ	1	1	A	7/9	
G021	4800640	ジロータカバーアッセイ	1		B	7/9	
G005	4700103	キー	1	1	A	7/9	
G006	5000469	止め輪 (リテイニングリング)	1	1	A	7/9	
G023	5000531	Oリング	1	1	A	7/9	
G065	1745710	ピン	1	1	A	7/9	
R020	4800332	プラグアッセイ	1	1	B	6/9	
R020A	9004105-0110	Oリング	1	1	C	6/9	
R043	9005100-5600	プラグアッセイ 9/16-18	1	1	B	6/9	
R043A	9004201-3700	Oリング	1	1	C	6/9	
R045	9005100-5000	プラグアッセイ 1/2-20	1	1	B	6/9	
R045A	9004201-3100	Oリング	1	1	C	6/9	
D002	AAM0603001	六角穴付ボルト M6X30	7	7	A	6/9	
D010	1734449	スクリュー	1	1	A	6/9	
D011	4800196	サミングリンク	1	1	A	6/9	
D012	4800214	フィードバックリンク	1	1	A	6/9	
D013	4800201	ニュートラルアジャストリンク	1	1	A	6/9	
D014	1734450	ニュートラルアジャストスクリュー	1	1	A	6/9	
D015	336826	シールナット	1	1	A	6/9	
D016	9009660-3100	ワッシャー	1	1	A	6/9	
D017	9800916	コントロールハンドル	1	1	A	6/9	
D019	9003513-0800	ナット M8	1	1	A	6/9	
D032	4800615	プラグアッセイ 3/4-16	1	1	B	6/9	
D032A	9004201-5000	Oリング	1	1	C	6/9	
D035	9005110-7500	プラグアッセイ 3/4-16	1	1	B	6/9	
D035A	9004201-5000	Oリング	1	1	C	6/9	
D070	4800529	MDCアッセイ	1	1	B	6/9	

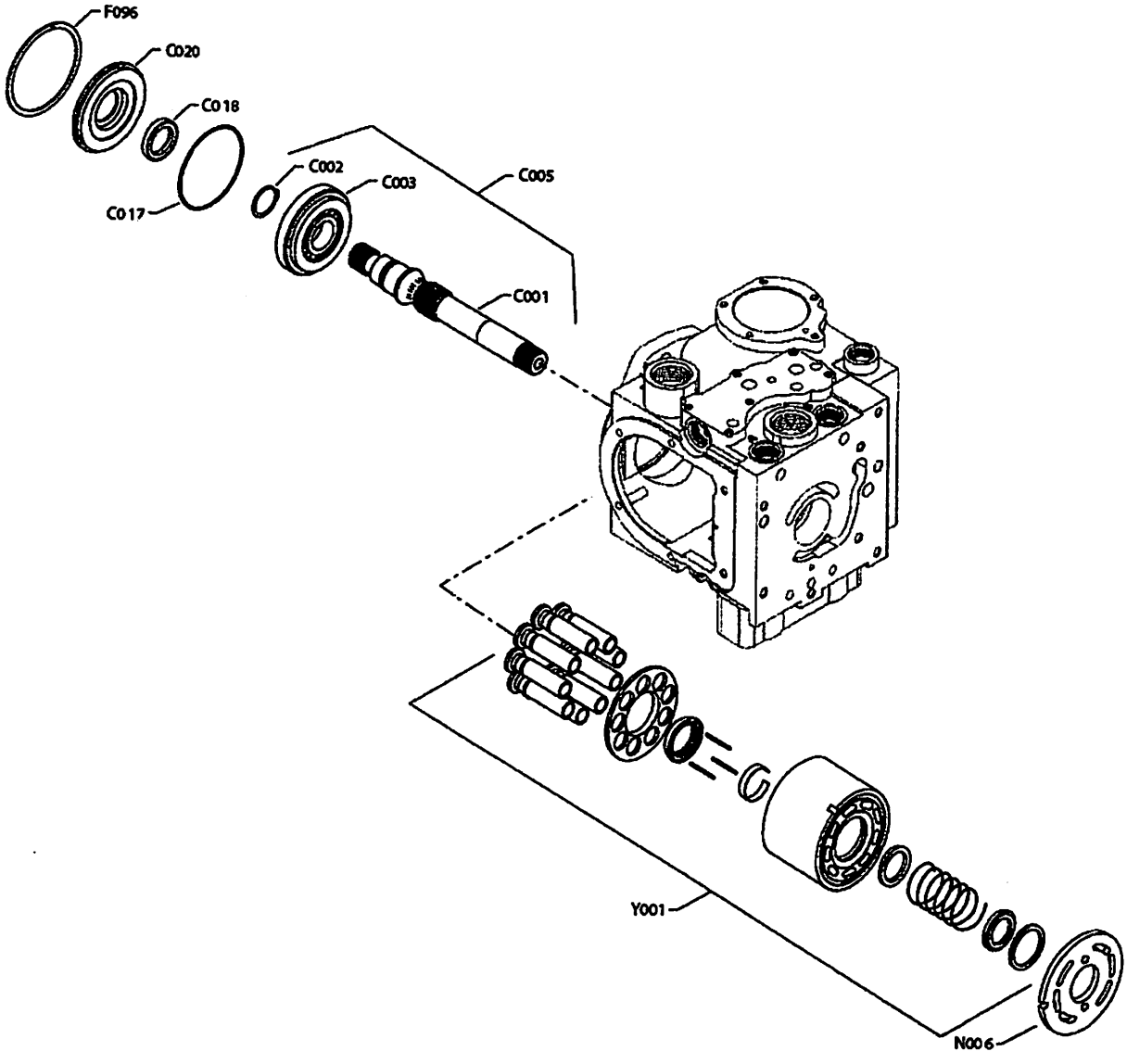

Sauer-Danfoss-Daikin Ltd.

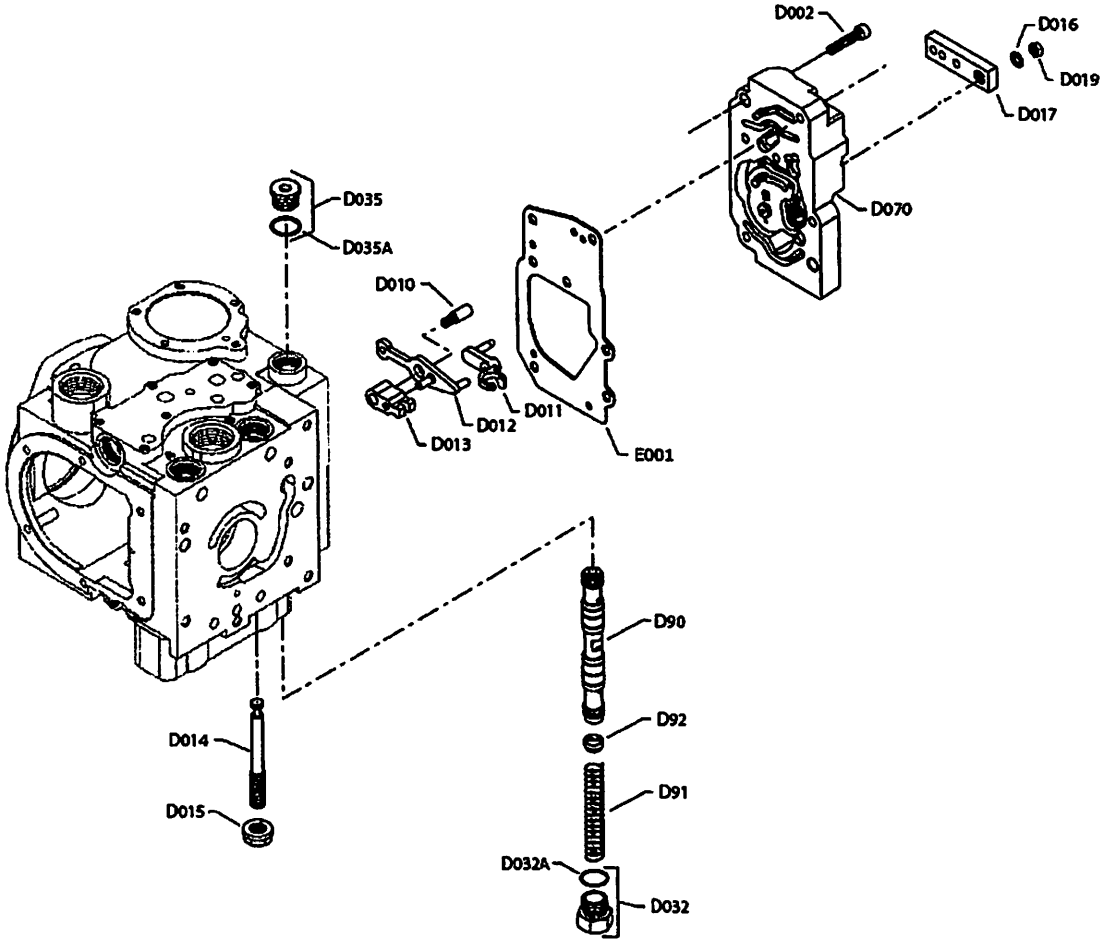
D002
D016
D019
D017
D070
D035
D035A
D010
D012
D011
D013
E001
D90
D92
D91
D014
D015
D032A
D032

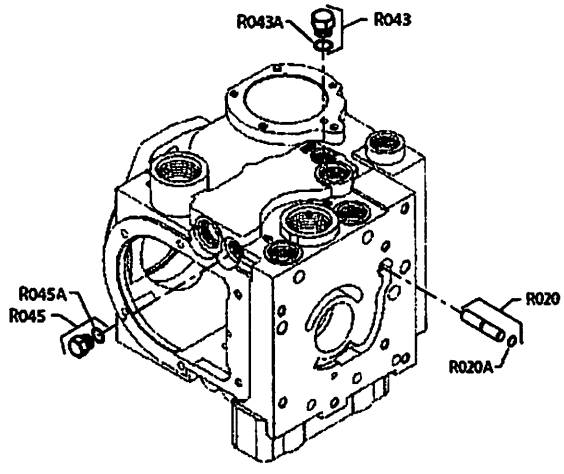
R043A
R043
R045A
R045
R020
R020A

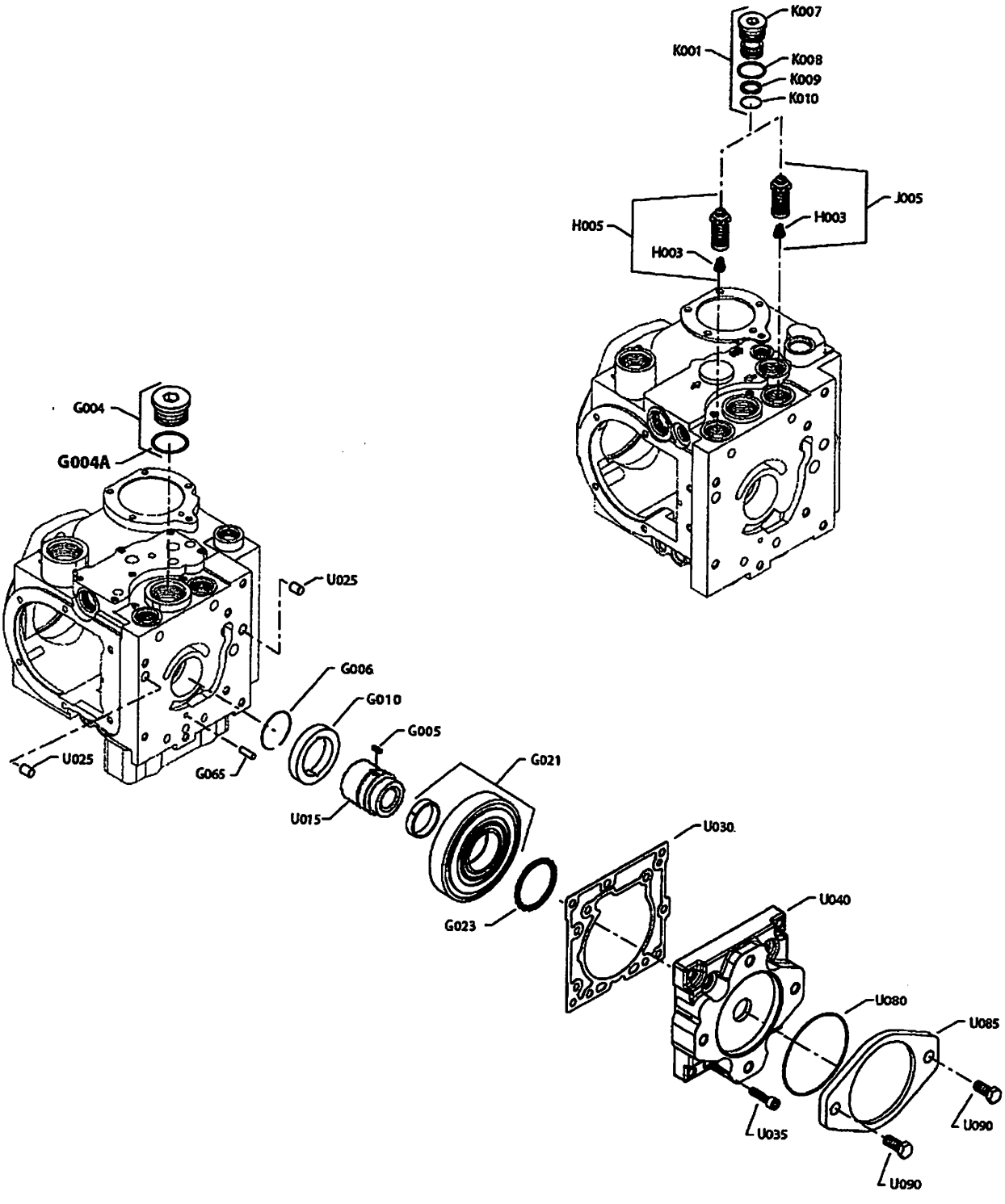
K007
K001
K008
K009
K010
J005
H005
H003
H003
G004
G004A
U025
G006
G010
G005
G021
U025
G065
U015
U030
G023
U040
U080
U085
U035
U090
U090

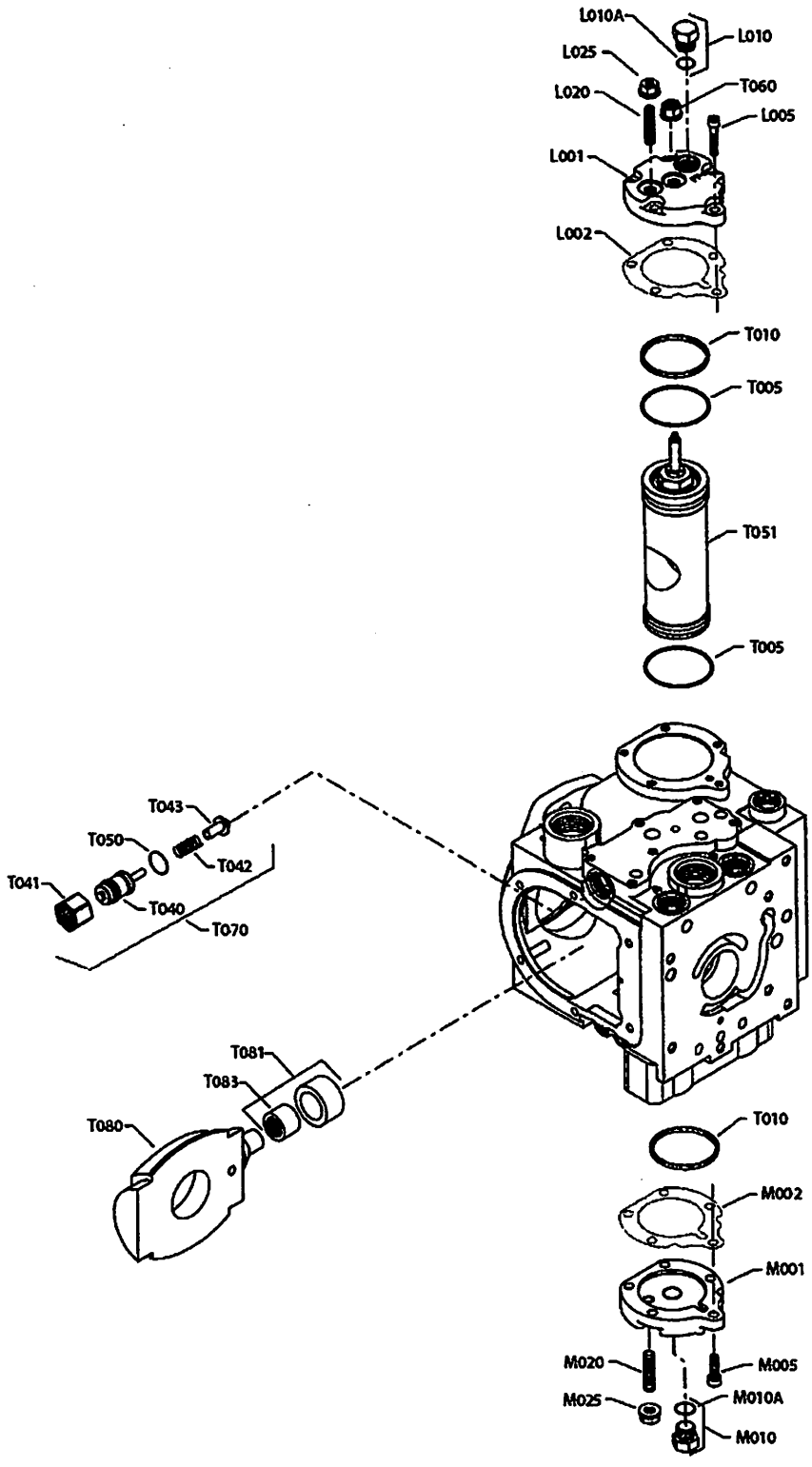
L010A
L010
L025
L020
T060
L005
L001
L002
T010
T005
T051
T005
T043
T050
T042
T041
T040
T070
T081
T083
T080
T010
M002
M001
M020
M005
M025
M010A
M010

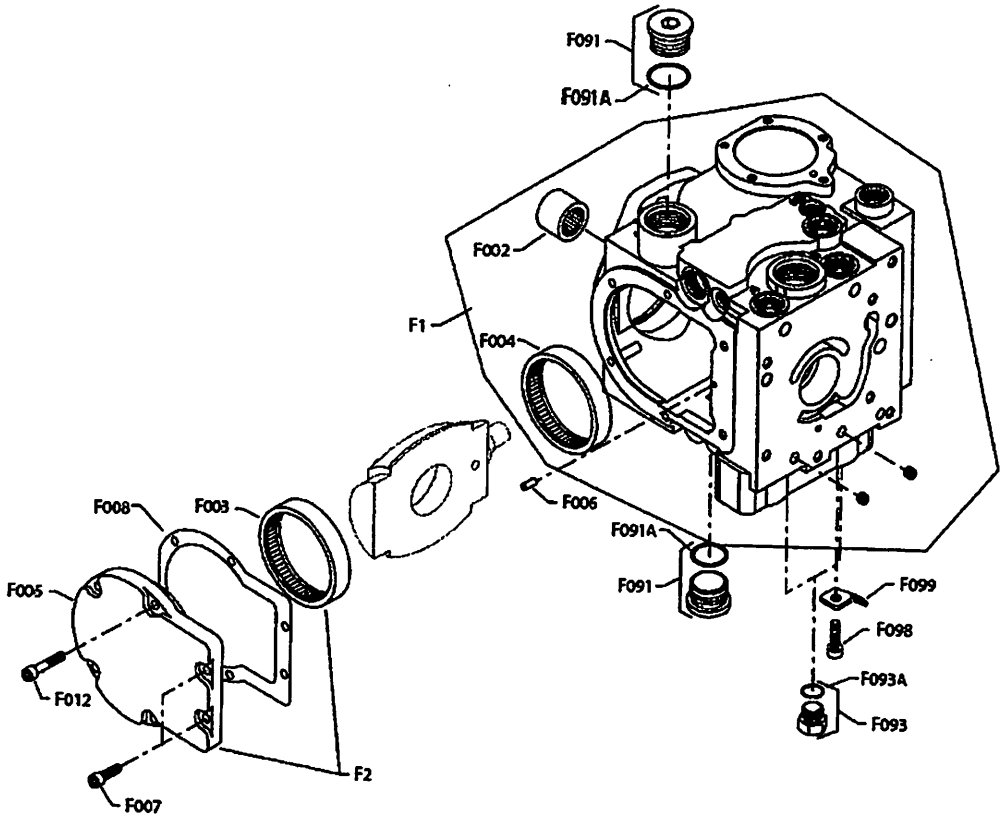

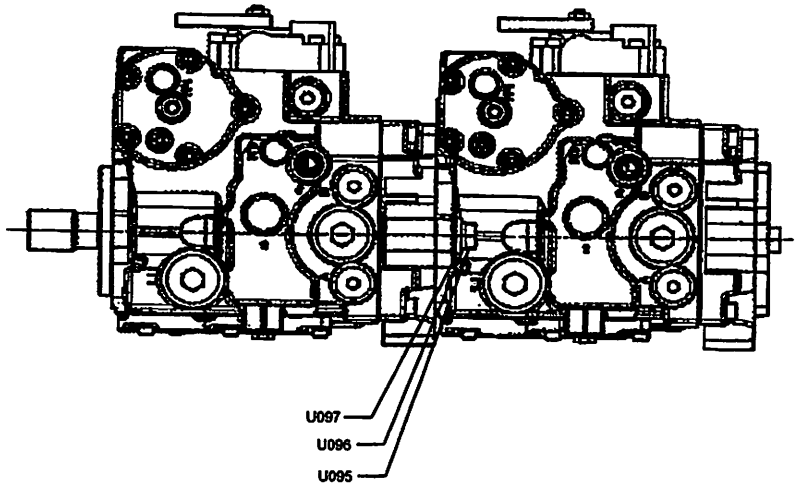

Sauer-Danfoss-Daikin Ltd.

SAUER SUNDSTRAND

Series 42

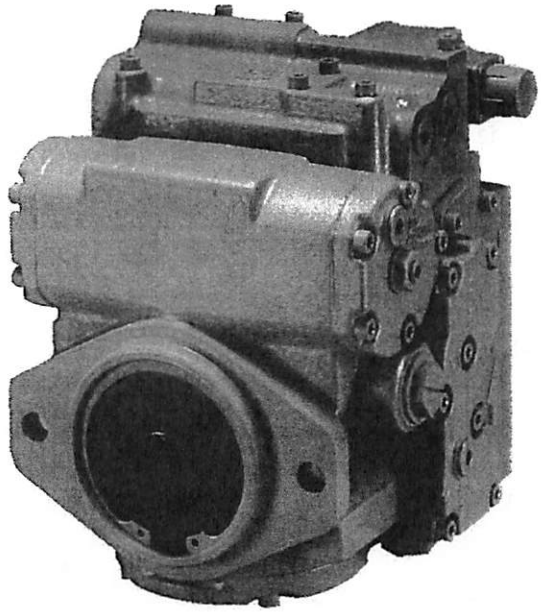

Axial Piston Pumps Service Instructions

1. Introduction

1.1 Using This Manual

The Adjustment and Minor Repair procedures detailed herein may be performed by trained personnel without voiding the unit warranty.

Cleanliness is a primary means of assuring satisfactory transmission life. Cleaning parts by using a clean solvent wash and air drying is usually adequate. As with any precision equipment, all parts must be kept free of foreign materials and chemicals. When performing service activities, protect all exposed sealing surfaces and open cavities from damage and foreign material.

Whenever removing a service component, it is recommended that any gaskets and O-rings be replaced. Lightly lubricate all O-rings with clean petroleum jelly prior to assembly. All gasket sealing surfaces must be cleaned prior to installing new gaskets.

All exploded view drawings depict the 28cc frame size. For variances in the 41cc frame size, see the outline drawings in section 3. Differences in wrench size and torquing for the two frame sizes are noted in the text. Note that exterior housing screws are mostly Torx-type T30 or T45.

These symbols are used within drawings:

Apply petroleum jelly.

Lubricate with clean hydraulic oil.

1.2 Safety Precautions

Always consider safety precautions before beginning a service procedure. Protect yourself and others from injury. The following general precautions should be taken into consideration whenever servicing a hydrostatic system.

Loss of Hydrostatic Braking Ability

WARNING
When Series 42 units are used in vehicular hydrostatic drive systems, the loss of hydrostatic drive line power in any mode of operation (e.g. acceleration, deceleration or "neutral" mode) may cause a loss of hydrostatic braking capacity. A braking system which is independent of the hydrostatic transmission must, therefore, be provided which is adequate to stop and hold the system should the condition develop.

Disable Work Function

WARNING
Certain service procedures may require the vehicle/machine to be disabled (wheels raised off the ground, work function disconnected, etc.) while performing them in order to prevent injury to the technician and bystanders.

Fluid Under High Pressure

WARNING
Use caution when dealing with hydraulic fluid under pressure. Escaping hydraulic fluid under pressure can have sufficient force to penetrate your skin causing serious injury. This fluid may also be hot enough to burn. Serious infection or reactions can develop if proper medical treatment is not administered immediately.

Flammable Cleaning Solvents

WARNING
Some cleaning solvents are flammable. To avoid possible fire, do not use cleaning solvents in an area where a source of ignition may be present.

Copyright 1996, Sauer-Sundstrand Company.
All rights reserved. Contents subject to change. Printed in U.S.A.

Contents

1. Introduction 2
1.1 Using This Manual 2
1.2 Safety Precautions 2

2. Model Code 4

3. Component and Port Locations 5
3.1 Component Locations 5
3.2 Ports and Pressure Gauges 6

4. Adjustment and Minor Repair Instructions 8
4.1 Size and Torque for Plugs and Fittings 8
4.2 Pump "Neutral" Adjustment 9
4.3 Control "Neutral" Adjustment for MDC/EDC Controls 10
4.4 MDC Control Module 11
4.5 EDC Control Module 12
4.6 MDC/EDC Control Spool, Control Linkage, and Control Neutral Adjustment Screw 13
4.7 MDC Neutral Start/Backup Alarm Switch 14
4.8 MDC Solenoid Override Valve 16
4.9 FNR, NFPE, and NFPH Controls 17
4.10 System Check Relief Valves (High Pressure Relief, Charge Check, & Bypass Valves) 18
4.11 Charge Relief Valve 19
4.12 Loop Flushing Valve 21
4.13 Shaft Seal and Shaft Replacement 22
4.14 Auxiliary Mounting Pads 24
4.15 Charge Pump 25
4.16 Filtration 28
4.17 Servo Piston Covers 29
4.18 Displacement Limiter Adjustment 30

5. Exploded View Parts Drawings 31
5.1 Shaft Options 31
5.2 Filtration, Charge Relief, System Relief, and Loop Flushing 32
5.3 Charge Pump, Auxiliary Pads, and Servo Covers 33
5.4 Control Options 34

2. Model Code

Refer to the model code exhibited on the unit's name plate for information regarding the configuration of the unit.

Model Code

Serial No.

Note: Some options listed here may not currently be available. Some options on your unit may not be listed here. This is not an order code. See the Series 42 Price Book for up-to-date ordering information.

X	XX	XX	XXXXX
Location	Year	Week	Sequence No.

A	B	C	D	E	F	G	H	J	K	L	M	N	P
	1 2		1 2 3 4		1 2 3	1 2 3 4							

A		Series	42
B	1	Rotation	L = CCW R = CW
	2	Displacement	28 = 28 cm³ (1.71 in³) 41 = 41 cm³ (2.50 in³)
C		Input Shaft Configurations	C = 13T 16/32P Spline D = 15T 16/32P Spline E = 19T 16/32P Spline G = 1.000 in. O.D. Straight Keyed K = 1.000 in. O.D. Tapered (1.5 in/ft)
D	1	Control Type	N = None A = MDC, Linear, Low Force C = MDC, Non-Linear, Low Force E = EDC (Electric Displacmt Contrl) F = FNR (3-Pos Forwrd-Neut-Revrs) G = NFP (Non-Feedback Proport'l)
	2	NSS for MDC or PCP for EDC or Connector for FNR or Style for NFP	N = None or Not Applicable 1 = NSS / Weatherpack for MDC, or PCP Style for EDC or 12V Electric for NFP 2 = 12 V DIN for FNR 3 = NSS+BAS / CW Handle Rot. / Weatherpack for MDC or Hydraulic for NFP 5 = NSS+BAS / CCW Handle Rot. / Weatherpack for MDC
	3	Solenoid Override with MDC or EDC Input or Inching/Braking for NFP	N = None or Not Applicable A = 12V Override / Weather Pack, or EDC Input = 14-85 mA or 400 - 1200 mA or 5-20 bar for NFP E = 12V Override / Brake Port
	4	Handle for MDC or Connector for EDC or Connector for NFP	N = None or Not Applicable 1,6 = Standard Handle fpr MDC or M/S Connector for EDC or Amp Connector for NFP 2,5 = Clevis Handle for MDC or Weather Pack for EDC

E		Control Response Time	x1 = Fast x2 = Medium x3 = Slow
F	1	Port Style	A,J,P = SAE Threaded O-Ring Boss
	2	Loop Flushing/Cooling	N = None 2,3 = Loop Flushing/Cooling Shuttle
	3	Filtration	N = None (Ext. Charge Supply) A = Suction (No Adapter Plate) C = Remote Pressure (Partial Flow) G = Suction (Adapter Plate)
G	1	Charge Pump	N = None 2 = 11 cm³/rev (0.67 in³/rev)
	2	Charge Relief Setting	C = 14 bar (205 psi) F = 20 bar (280 psi)
	3	Special Drive Features	N = None 1 = NFP
	4	Rear Auxilliary Mounting Pad	N = None A = SAE-A, 9 Tooth B = SAE-B, 13 Tooth T = SAE-A Special, 11 Tooth
H		High Pressure Relief Setting - Port "A"	NN = Check Valve only, No HPRV 14 = 140 bar (2030 psi) 17 = 175 bar (2450 psi) 19 = 190 bar (2755 psi) 21 = 210 bar (3045 psi) 23 = 230 bar (3330 psi) 25 = 250 bar (3625 psi) 28 = 280 bar (4060 psi) 30 = 300 bar (4350 psi) 34 = 345 bar (5000 psi) 00 = No HPRV, No Check Valves
J		High Pressure Relief Setting - Port "B"	
K		Loop Bypass Valve	N = None B = Yes
L		Displacement Limiters - Side 1	N, 0 = None A, 1 = Yes, Set at Max Disp
M		Displacement Limiters - Side 2	
N		Special Hardware Features	NNN = None
P		Special Non-Hardware Features	NNN = None

3. Component and Port Locations

3.1 Component Locations

A pump with a manual displacement control (MDC) and no filtration adapter is shown. With non-feedback and automotive controls, the positions of the case drains vary (shown in gray). With a filtration adapter, the porting in the "Filtration Options" area varies (see section 4.16).

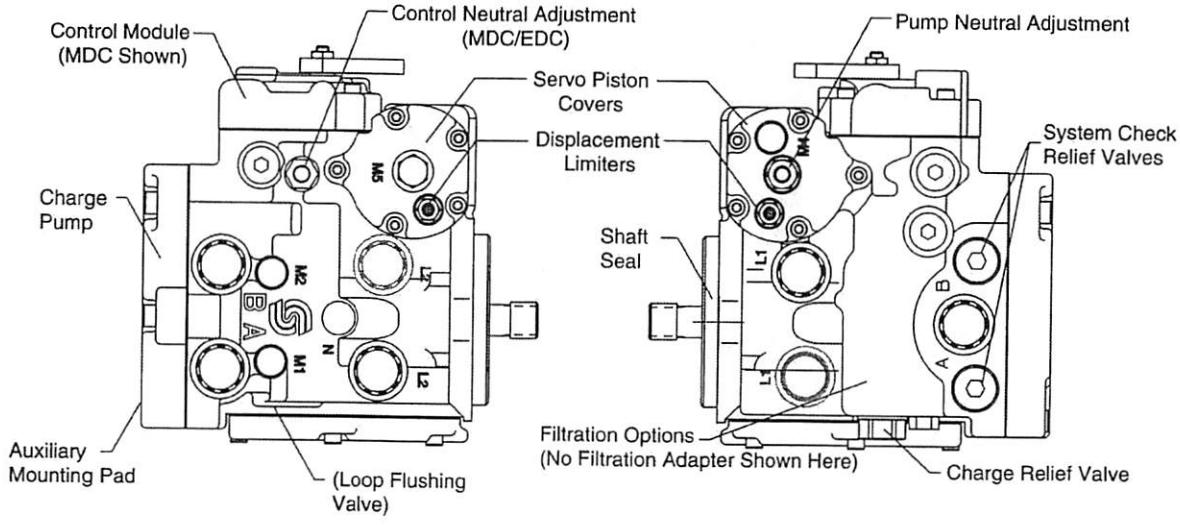

Series 42 28cc Variable Pump

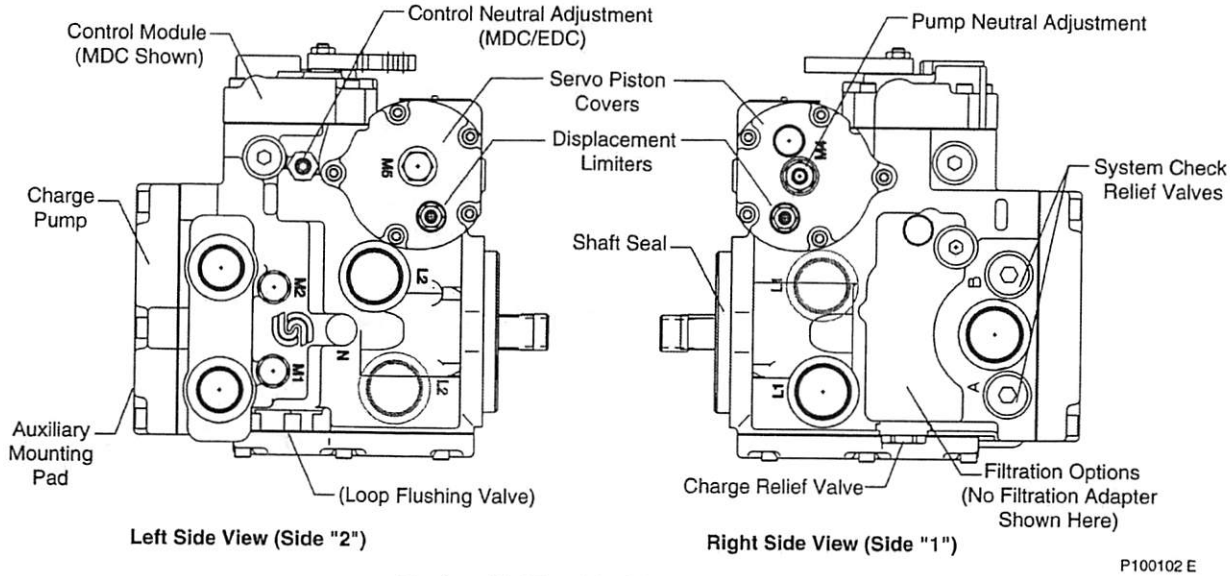

Series 42 41cc Variable Pump

4. Adjustment and Minor Repair Instructions

4.1 Size and Torque for Plugs and Fittings

Plug and fitting sizes are given here. Place a fresh O-ring, lightly lubricated with petroleum jelly, whenever a plug is removed. Each should be torqued as indicated. A 28cc unit with manual displacement control (MDC) is shown.

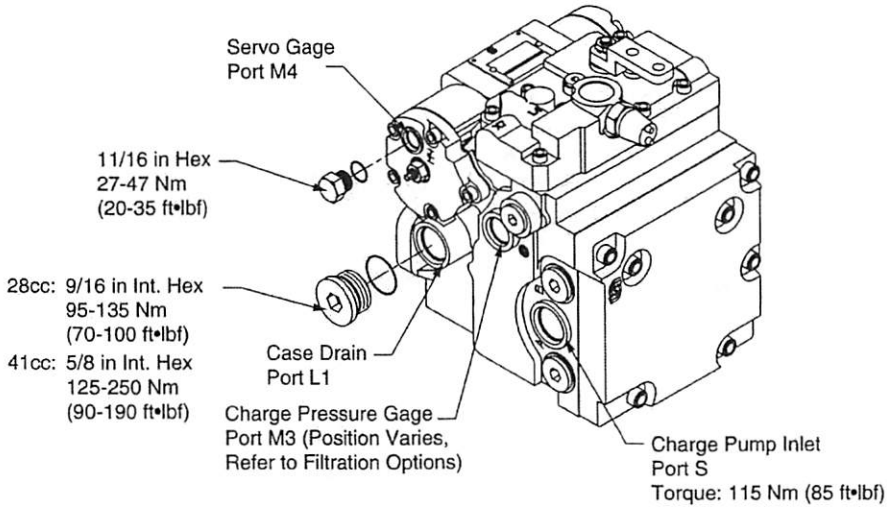

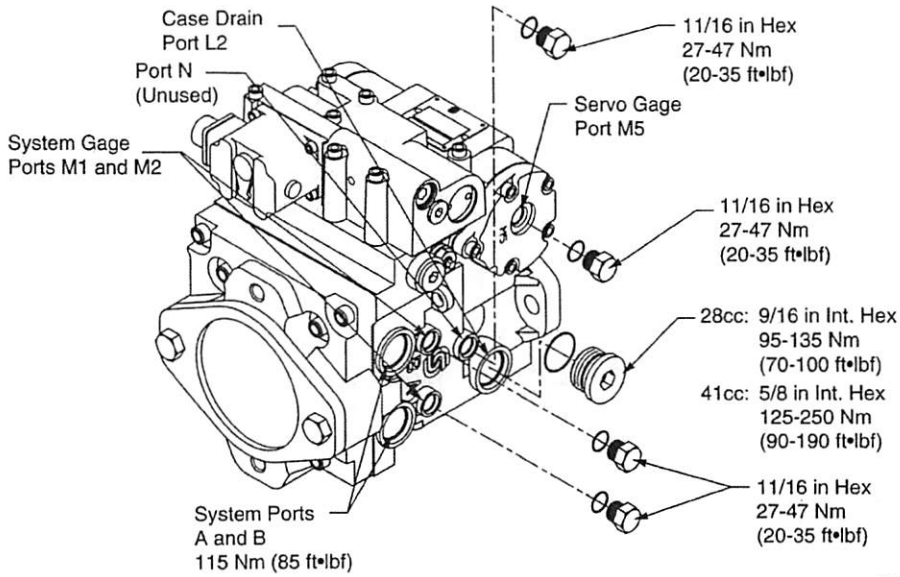

4.2 Pump "Neutral" Adjustment

The pump neutral adjustment sets the position of the servo piston and pump swashplate relative to the controlling mechanism.

WARNING
The following procedure requires the vehicle / machine to be disabled (wheels raised off the ground, work function disconnected, etc.) while performing the procedure in order to prevent injury to the technician and bystanders.

1. Disconnect machine function.
2. Connect a hose between gauge ports M4 and M5 to equalize the pressures on both ends of the pump servo piston.
3. Install pressure gauges in gauge ports M1 and M2 to measure system pressure.
4. Start the prime mover and operate at normal speed.
5. Loosen the pump "neutral" adjustment seal lock nut [28cc⇒13 mm Hex; 41cc⇒17 mm Hex]. Turn the pump "neutral" adjustment screw [28cc⇒5 mm Hex; 41cc⇒7 mm Hex] until the system pressure gauge readings are equal.
6. Turn the adjustment screw clockwise until one of the gauges registers an increase in system pressure. Note the position of the adjustment screw.

   Turn the screw counterclockwise until the other gauge registers an increase in system pressure. Note the position of the adjustment screw.
7. Turn the adjustment screw clockwise to a position halfway between the positions noted above. The system pressure gauges should indicate equal pressures.
8. While holding the adjustment screw in position, torque the seal lock nut [28cc⇒20-26 Nm (15-19 ft•lbf); 41cc⇒28-51 Nm (21-37 ft•lbf)] .
9. Stop the prime mover and remove the hose between gauge ports M4 and M5. Remove the pressure gauges installed in gauge ports M1 and M2. Reinstall the plugs in the gauge ports.
10. Reconnect work function.

IMPORTANT
If the pump is equipped with an MDC or EDC, the CONTROL "neutral" adjustment MUST also be performed before putting the pump into service (see next section).

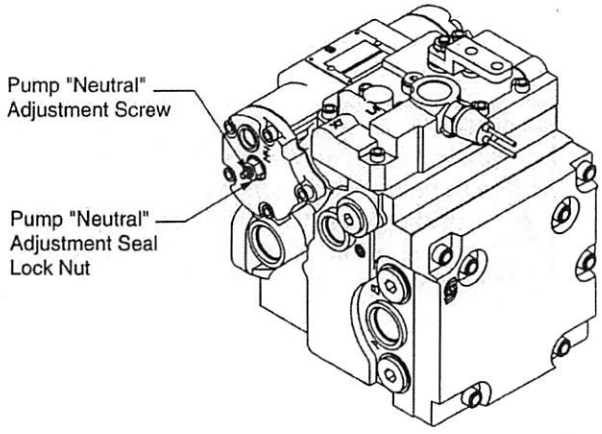

E100002 E

Pump Neutral Adjustment Screw (MDC Control Shown)

4.3 Control "Neutral" Adjustment for MDC/EDC Controls

The control neutral adjustment aligns the pump swashplate and the control spool so that a zero angle control setting provides a zero degree swashplate setting. This adjustment should be performed whenever any part of the control or swashplate mechanisms is adjusted or removed or after the pump neutral setting (previous section) is adjusted.

WARNING
The following procedure requires the vehicle / machine to be disabled (wheels raised off the ground, work function disconnected, etc.) while performing the procedure in order to prevent injury to the technician and bystanders.

1. Disconnect the work function. Disconnect the external control linkage (for MDC) or control signal input (for EDC) from the pump.
2. Install pressure gauges in gauge ports M4 and M5 to measure pressure on the pump servo piston.
3. Start the prime mover and operate at normal speed.
4. Loosen the CONTROL "neutral" adjustment seal lock nut (see drawing) [17 mm Hex] . Turn the control "neutral" adjustment screw [5 mm Int. Hex] until the servo piston pressure gauge readings are as close to equal as possible.
5. Turn the adjustment screw clockwise until one of the gauges registers an increase in pressure on the servo piston. Note the position of the adjustment screw.

   Turn the screw counterclockwise until the other gauge registers an increase in pressure on the servo piston. Note the position of the adjustment screw.
6. Turn the adjustment screw clockwise to a position halfway between the positions noted above. The servo piston pressure gauges should indicate nearly equal pressures.
7. While holding the adjustment screw in position, torque the seal lock nut [14-24 Nm (10-18 ft•lbf)].
8. Stop the prime mover and remove the pressure gauges installed in gauge ports M4 and M5. Reinstall the plugs in the gauge ports.
9. Reconnect the external control linkage (for MDC) or control signal input (for EDC) to the pump. Reconnect the work function.

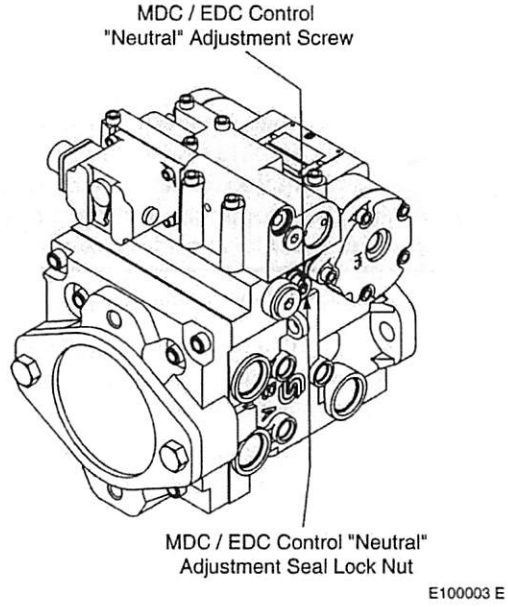

Control Neutral Adjustment Screw (EDC Control Shown)

4.4 MDC Control Module

The manual displacement control (MDC) module provides control of the pump servo piston through a connection to the summing link pin within the pump housing. The following procedure shows how to remove and install the control housing. Section 4.6 explains how to remove and install the control spool and linkage.

1. Clean the external surfaces of the pump. If necessary, remove the MDC handle.
2. Remove the seven (7) control retaining screws [Torx T30] that secure the control to the pump housing. Remove the control and control gasket from the pump.

   Note: See section 4.6 for instructions on removing/installing the control spool and linkage.
3. Clean the sealing surfaces of the control and the pump housing. Place a new gasket in position on the housing.

CAUTION
The control orifices are part of the control gasket. Refer to the appropriate Service Parts List to determine the correct gasket.

4. Hold the summing link pin in position while installing the control. (The spring on the control spool will tend to push the link to an extreme position.) The link pin MUST engage the slot in the control cam. A plug is provided on the MDC housing to permit visual inspection of linkage pin engagement.

   Note: It may be easiest to lay the servo piston side of the control down first, then watch the link pin engage from the charge pump side of the pump.
5. Install and torque the control screws [15-17 Nm (11-13 ft•lbf)]. Perform Control Neutral Adjustment (Section 4.3).

WARNING
Failure to properly engage the link pin with the control cam will result in incorrect control operation, which may lead to loss of control of the vehicle / machine.

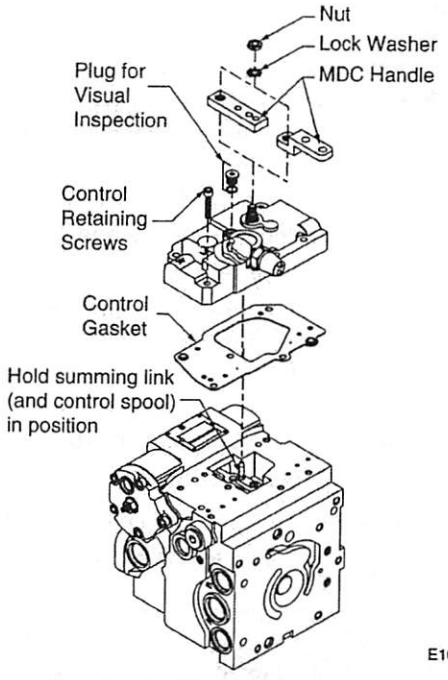

E100004 E

MDC Control Module Assembly

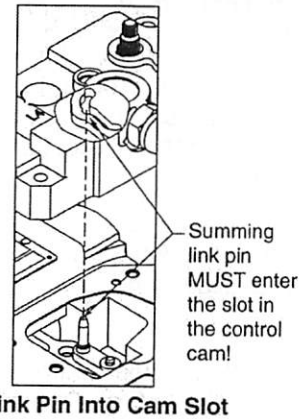

E100005 E

Link Pin Into Cam Slot

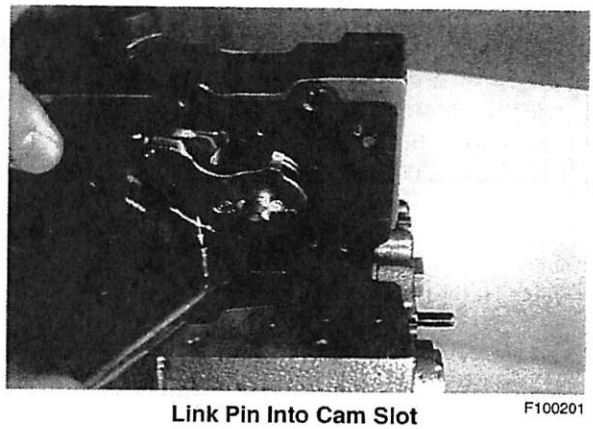

Link Pin Into Cam Slot F100201

4.5 EDC Control Module

The Electric Displacement Control (EDC) provides a control function through connections to the summing link pin within the pump housing. The following procedure shows how to remove and install the control housings. The next section explains how to remove and install the control spool and linkage.

1. Clean the external surfaces of the pump. If necessary, remove control input signal.
2. Remove the seven (7) control retaining screws [Torx T30] that secure the control to the pump housing. Note the position of the different length screws. Remove the control and control gasket from the pump.

   Note: See next section for instructions on removing/installing the control spool and linkage.
3. Clean the sealing surfaces of the control and the pump housing. Place a new gasket in position on the housing.

CAUTION
The control orifices are part of the control gasket. Refer to the appropriate Service Parts List to determine the correct gasket.

4. Hold the summing link pin in position while installing the control. (The spring on the control spool will tend to push the link to an extreme position.) The link pin MUST engage the hole in the control piston fork.

   Note: It may be easiest to lay the servo piston side of the control down first, then watch the link pin engage from the charge pump side of the pump.
5. Install and torque the control screws [15-17 Nm (11-13 ft•lbf)]. Perform Control Neutral Adjustment (Section 4.3).

WARNING
Failure to properly engage the link pin with control piston fork will result in incorrect control operation, which may lead to loss of control of the vehicle / machine.

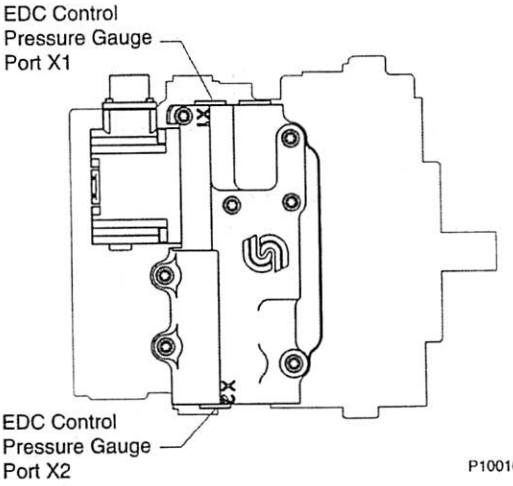

EDC Module Showing Port Locations

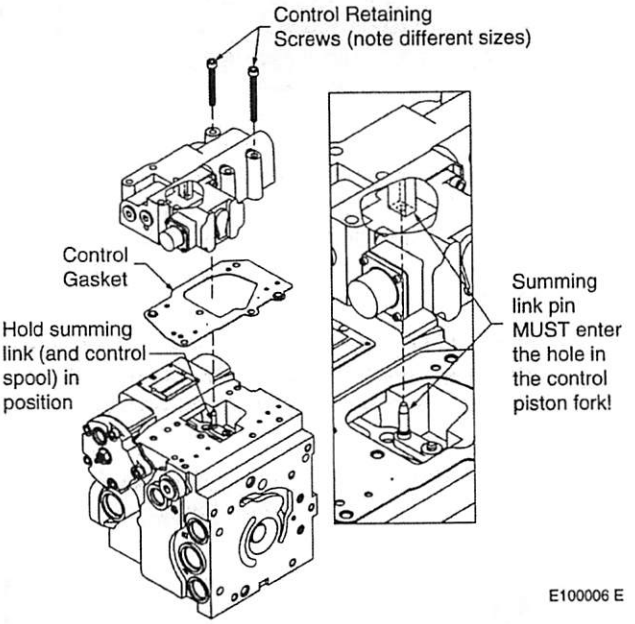

EDC Control Module Assembly

4.6 MDC/EDC Control Spool, Control Linkage, and Control Neutral Adjustment Screw

The control spool, control linkage, and control neutral adjustment screw can be removed for cleaning and to change the O-rings or the seal lock nut.

Removal of Spool, Linkage, and Adjustment Screw

1. Clean the external surfaces of the pump.
2. Remove the MDC or EDC module and the control gasket from the pump housing (see previous two sections).
3. Remove the summing link.
4. Remove the control spool bore plug [5/16 in Int. Hex] or screws [Torx T30], cover, and gasket. Remove the opposite bore plug [5/16 in Int. Hex], and remove the control spool and spring.
5. Remove the linkage pivot screw [4 mm Int. Hex], feedback link, and neutral adjustment link.
6. Remove the seal lock nut [17 mm Hex] and the control neutral adjustment screw [5 mm Int. Hex].

Installation of Spool, Linkage, and Adjustment Screw

1. Install the control neutral adjustment screw and seal lock nut. Do not tighten the nut.
2. Assemble the "neutral" adjustment link and feedback link, and install as shown. Install and torque the linkage pivot screw [8-15 Nm (6-11 ft•lbf)].
3. Lubricate and install the control spool and spring assembly noting proper orientation.

WARNING
The control spool and spring assembly MUST be oriented in the housing as shown for proper control operation.

4. Install and torque the control spool bore plug [41-94 Nm (30-70 ft•lbf)]. Or install the control spool cover (with a new gasket) or plug, and torque the screws [15-17 Nm (11-13 ft•lbf)].
5. Install the summing link. Hold the control spool in position while engaging the fork on the summing link with the flats on the spool. If necessary, rotate the spool to engage the summing link.
6. Install a new control gasket. Hold the summing link and control spool in position while reinstalling the MDC or EDC (see section 4.4 or 4.5). Perform Control Neutral Adjustment (section 4.3).

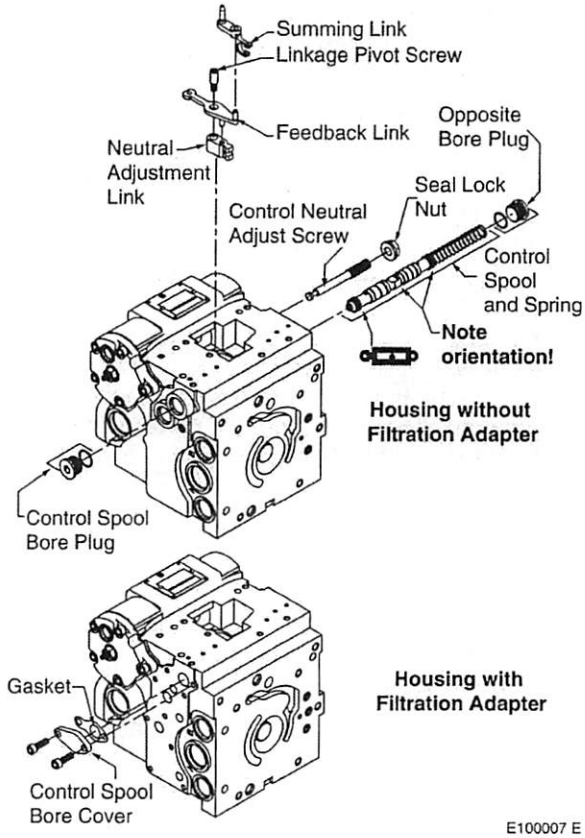

MDC/EDC Control Spool and Linkage

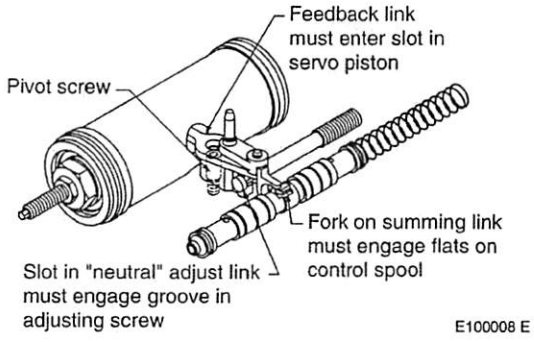

Servo Piston Linkage and Control Spool (Internal Parts Shown with Housing Removed)

4.7 MDC Neutral Start/Backup Alarm Switch

The Neutral Start Switch (NSS) prevents the engine and pump from being started when the pump is out of neutral. The NSS should be wired in series with the engine starting circuit. The switch contact is closed at the control handle's neutral position and opens when the control handle is rotated 1.5 to 2° from neutral.

The Backup Alarm Switch (BUA) outputs an electronic signal when the control handle is in a reverse position. This switch is normally wired in series with an audio output. The switch contact is open until the control handle is rotated 2.6 to 3.75° in the reverse direction.

CAUTION
The control handle's neutral position must agree with the pump's neutral position for the NSS/BUA to work effectively (see section 4.3).

The Neutral Start / Backup Alarm Switch assembly can be configured for three different settings.

i. A Neutral Start Switch only.

ii. A Neutral Start Switch with Backup Alarm for units where clockwise (CW) handle rotation results in "reverse" motion.

iii. A Neutral Start Switch with Backup Alarm for units where counterclockwise (CCW) handle rotation results in "reverse" motion.

The setting must be in accordance with the configuration of the unit. See the model code (section 2) if uncertain of the type of NSS you have.

Alignment of the NSS requires a special alignment tool. Dimensions are given at right.

(continued)

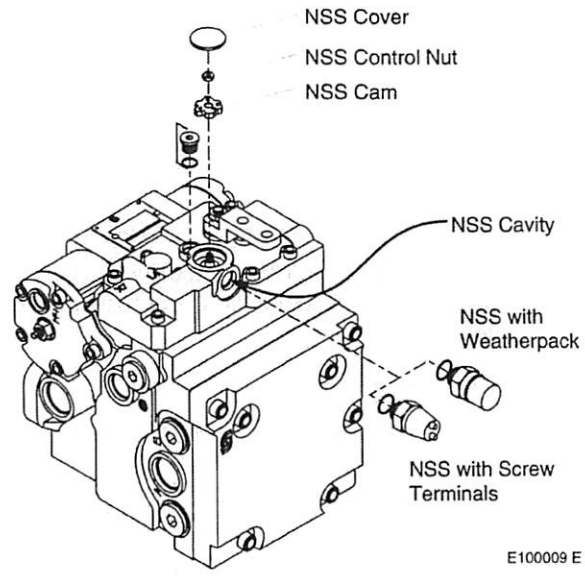

NSS Assembly on MDC

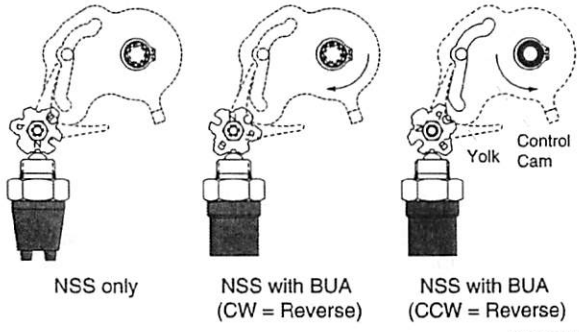

Top View of NSS Showing Cam Positions

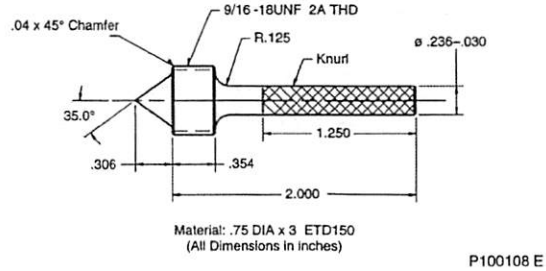

Alignment Tool

Adjustment is performed by setting the cam position within the NSS assembly.

1. The MDC module must be removed from the pump housing. Refer to section 4.4.
2. Remove NSS [7/8 in Hex].
3. Remove the NSS cover by inserting a screwdriver into the NSS cavity and popping off the cover with a hammer. Be careful not to damage the internal hardware.
4. Remove the control nut [8 mm Hex].
5. Use a screwdriver to pop off the cam.
6. Set cam in proper orientation according to the unit's configuration (i, ii, or iii above).
7. Screw special alignment tool in NSS cavity to hold cam in place.
8. On the underside of the MDC module, clamp a pair of locking pliers around the spring contacts of the control cam. The pliers should hold the nub on the control cam to the pin underneath. This will hold the control cam in neutral position.
9. Screw control nut on cam [4.1-6.8 Nm (3-5 ft•lbf)].
10. Press new cover on top of cam cavity. This requires either an arbor press or a full-sized punch (punch depth = 1.06 mm (0.0417 in), punch width = 23.3 mm (0.916 in)).
11. Remove the alignment tool and the locking pliers.
12. Place a new lubricated O-ring on NSS.
13. Reconnect the NSS [25-29 Nm (18-22 ft•lbf)] to the MDC.
14. Reinstall MDC module onto pump housing (refer to section 4.4).

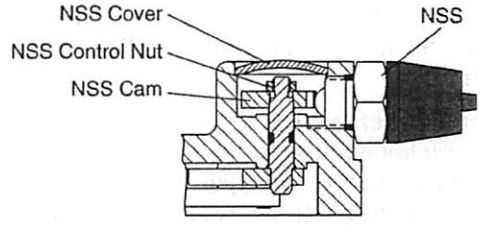

P100109 E

Side View of NSS and NSS Cavity

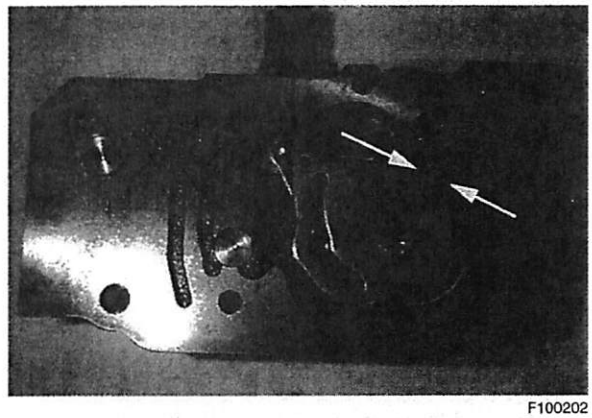

F100202

Underside of MDC Module Showing Where to Clamp Locking Pliers

4.8 MDC Solenoid Override Valve

The solenoid override valve is a safety feature that connects both ends of the servo control piston together when the solenoid is de-energized. Thus the pump can be put into stroke only when the solenoid is energized.

The solenoid override with brake release includes hydraulic control of a safety brake. When de-energized, a spring-applied, hydraulically-released brake is drained through port X7. For conditions where case back-pressure on the spring-applied brake is critical, an external drain to the reservoir can be connected through port L4.

The solenoid override valve can be removed to inspect and remove foreign matter.

Removal

1. Remove retaining nut [9/16 in Hex].
2. Remove solenoid housing.
3. Remove retaining ring at base of solenoid.
4. Remove solenoid. This should be connected to internal spool.

Installation

1. Replace O-ring.
2. Place spring and plunger inside of solenoid.
3. Attach spool (male notch) to plunger (female notch).
4. Insert solenoid/spool assembly in solenoid override bore.
5. Snap retaining ring over base of solenoid.
6. Place washer at base of solenoid.
7. Install housing and retaining nut [2-4 Nm (1.5-3.5 ft•lbf)].

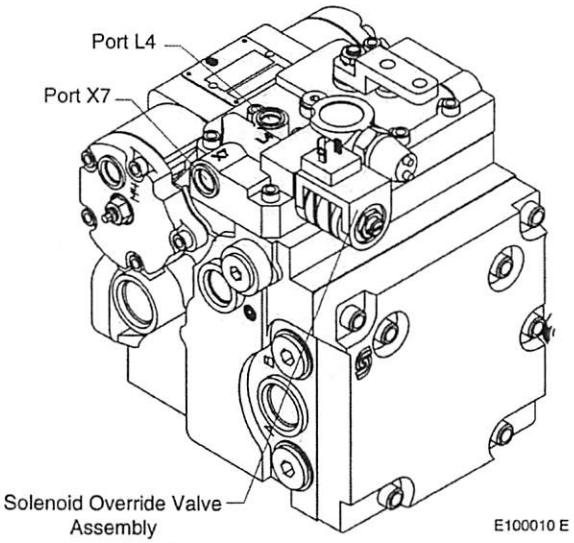

Solenoid Override Valve Assembly

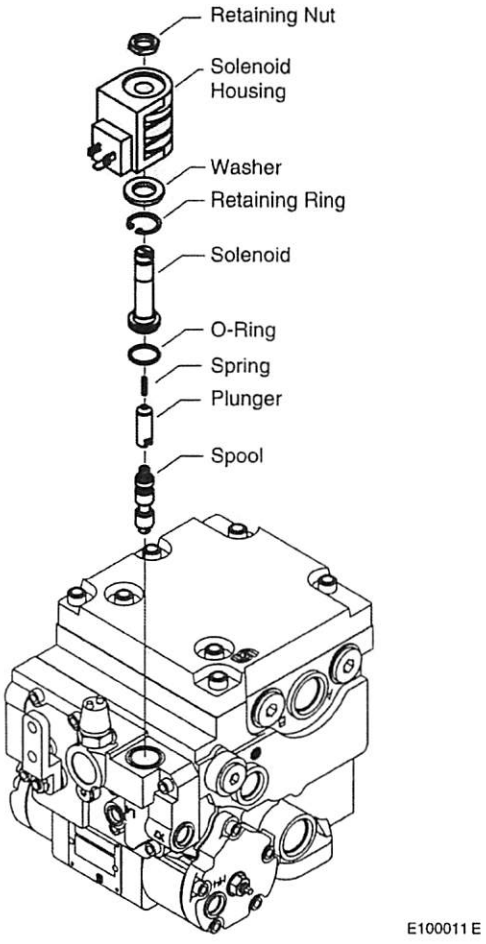

Exploded View of Solenoid Override Assembly

4.9 FNR, NFPE, and NFPH Controls

The 3-position FNR control and the electric and hydraulic non-feedback proportional (NFPE and NFPH) controls are non-feedback type controls. The FNR and NFPE controls consist of modules mounted on the pump housing. The hydraulic input for NFPH is received through ports on the top of the pump [9/16–18 SAE O-ring fitting].

The non-feedback controls are set at the factory. The control modules can be removed to clean the ports and change the O-rings.

The orifice plugs for the FNR and NFPE are located inside the servo piston covers. The orifice plugs for the NFPH are located in the NFPH ports. Orifice plugs may be cleaned or replaced.

Note: Future models may contain orifice plate between module and pump housing.

Removal and Installation of FNR and NFPE Modules

1. Clean pump and module housings.
2. Remove four (4) screws retaining module to housing [4 mm Int. Hex], and remove module from pump housing.
3. Remove O-rings from the control ports. Examine ports for cleanliness.
4. Clean sealing surfaces.
5. Replace locator pin.
6. Install new O-rings.
7. Replace screws [4.7-6.1 Nm (3.5-4.5 ft•lbf].

Removal and Installation of FNR and NFPE Control Orifices

Note: Future models may contain an orifice plate between module and pump housing. This will take the place of the orifice plugs beneath the servo piston cover.

1. Remove servo piston cover (see section 4.17).
2. Remove orifice plug [1/8 in Int. Hex].
3. Examine orifice and port for cleanliness.
4. Install orifice plug [2.0-3.4 Nm (1.5-2.5 ft•lbf)].

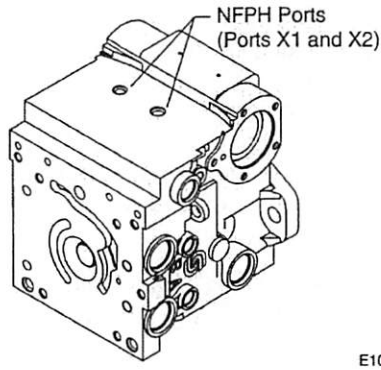

E100012 E

Position of NFPH Ports

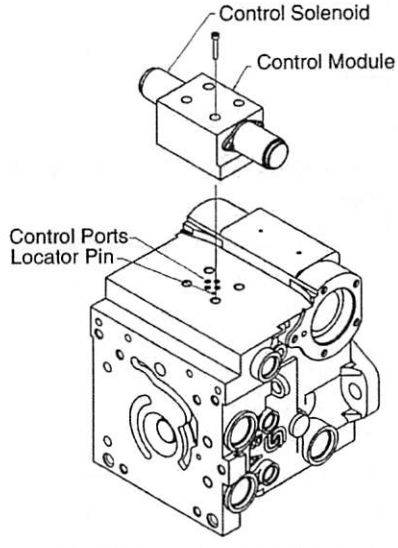

E100013 E

NFPE Assembly (FNR Similar)

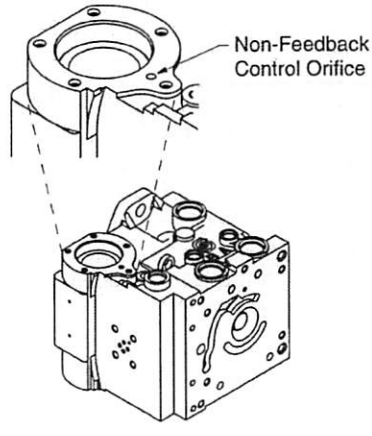

E100014 E

Location of Non-Feedback Control Orifice

4.10 System Check Relief Valves (High Pressure Relief, Charge Check, & Bypass Valves)

The charge check, high pressure relief, and the loop bypass functions are all contained within the system check relief (SCR) valve assembly. This assembly may be removed for cleaning and installation of fresh O-rings. The model code specifies whether high pressure relief valves, combination charge check/ high pressure relief valves, and/or loop bypass valves are present or not.

1. Remove the valve seat plugs [9 mm Int. Hex] or valve seat/bypass plugs [1 in Hex] from the pump housing.
2. Remove the check poppet or relief valve assemblies from the pump housing. The smaller end of each conical spring is crimped to retain it on the check poppet or relief valve. Do not remove.
3. Inspect the valves and mating seats in the special plugs for damage or foreign material.

CAUTION
The relief valves are factory set and should not be tampered with, except for replacing the entire valve.

4. The O-ring on the standard bypass plunger may be replaced by removing the retaining ring and removing the plunger from the special valve seat plug. Remove the O-ring from the plunger and install a new O-ring. Reinstall the plunger and retaining ring.
5. Install a new outer O-ring, new backup ring, and new inner O-ring on each valve seat plug.
6. Check that the conical springs are properly retained on the check poppets or relief valves. Install the check poppet or high pressure relief valve assemblies into the pump housing .

CAUTION
The conical springs MUST be correctly positioned on the check poppets or relief valves after installation for proper pump operation.

7. Install the valve seat plugs or valve seat/bypass plugs into the pump housing and torque [40-95 Nm (30-70 ft•lbf)].

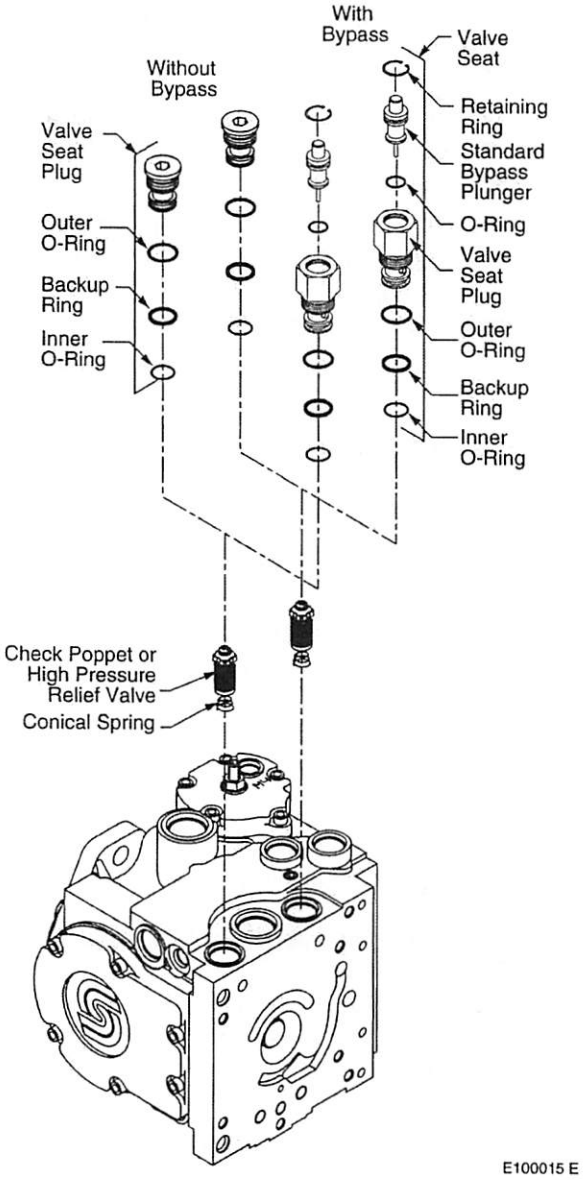

System Check Relief Valve Components

4.11 Charge Relief Valve

The charge relief valve may be removed for cleaning and installation of fresh O-rings. The pressure setting may be changed. However, note that the setting will vary for different charge flows which depends on charge pump size and pump speed. The factory setting is set relative to case pressure at 1800 rpm. The actual charge pressure will vary at different speeds.

Shim Adjustable Style

1. Remove the shim adjustable charge relief valve plug [1 in Hex] from the pump housing. Remove the O-ring from the plug.
2. Remove the spring and poppet from the housing.
3. Do not alter the shims which may be installed between the spring and valve plug, or interchange parts with another valve. Inspect the poppet and mating seat in the housing for damage or foreign material.
4. If desired, the charge relief valve setting can be changed. An *approximate* rule of thumb is 4 bar / 1.25 mm (58 psi / 0.050 in). The effective setting will vary.

   To confirm the charge relief valve setting, measure charge pressure (port M3) with the pump in stroke. The charge pressure should level off when the relief setting is reached.
5. Install a new O-ring on the valve plug. Reinstall the poppet, spring, and plug (with shims and O-ring) into the pump housing [55-135 Nm (40-100 ft•lbf)].

(continued)

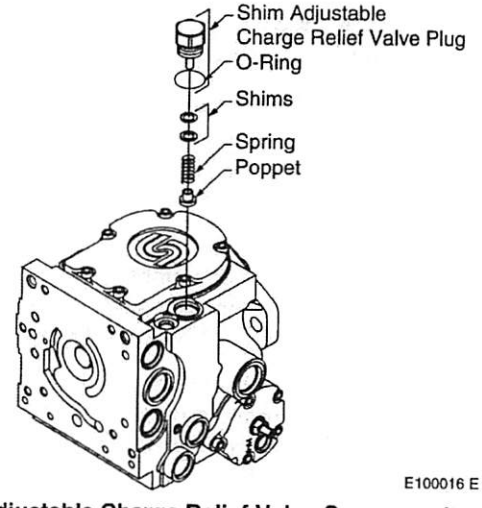

Shim Adjustable Charge Relief Valve Components

Approximate Relief Setting vs Shim Thickness	
4 bar / 1.25 mm	(58 psi / 0.050 in)

Screw Adjustable Style

1. Before removing the screw adjustable relief valve plug, mark the plug, lock nut, and housing so as to approximately maintain the original adjustment when assembling, Remove the screw adjustable charge relief valve plug by loosening the lock nut [1-1/16 in Hex] and unscrewing the plug [8 mm Int. Hex]. Remove the O-ring from the plug.
2. Remove the spring and poppet from the housing.
3. Inspect the poppet and mating seat in the housing for damage or foreign material.
4. Install a new O-ring on the valve plug. Reinstall the poppet and spring. Reinstall the plug with its lock nut [47-57 Nm (34-42 ft•lbf)], aligning the marks made at disassembly.
5. Check and adjust, if necessary, the charge pressure. For screw adjustable "anti-stall" charge relief valves, an approximate rule of thumb is 2.8 bar / quarter turn (40 psi / quarter turn).

   To confirm the charge relief valve setting, measure charge pressure (port M3) with the pump in stroke. The charge pressure should level off when the relief setting is reached.

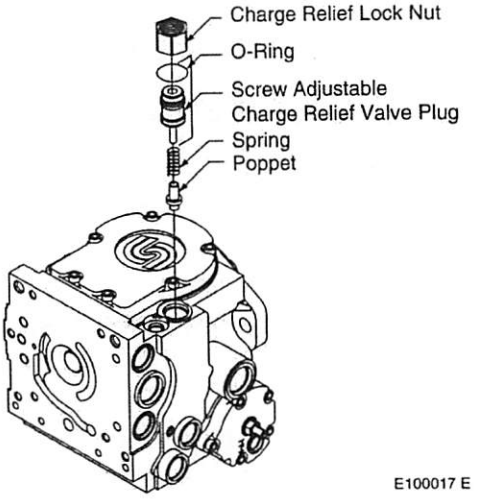

Screw Adjustable Charge Relief Valve Components

Approximate Relief Setting vs Screw Revolution	
2.8 bar / 1/4 turn	(40 psi / 1/4 turn)

4.12 Loop Flushing Valve

The loop flushing function consists of the loop flushing shuttle valve and the loop flushing relief valve. The assemblies may be removed for cleaning and installation of new O-rings. The relief valve poppet may be exchanged for one with a different flow rating, but the relief valve shims should not be changed out unless specifically instructed so by Sauer-Sundstrand. The function also can be defeated.

Loop Flushing Valve

1. Remove the loop flushing valve plug from the pump housing [11/16 in Hex]. Remove the O-ring from the plug.
2. Remove the loop flushing valve spool assembly from the housing.
3. Inspect the parts for damage or foreign material. The centering spring must be securely retained to the spool by the washer.
4. Install the loop flushing valve spool assembly into its bore. Install a new O-ring on the loop flushing plug and install [27-47 Nm (20-35 ft•lbf)].

Loop Flushing Relief Valve

1. Remove the loop flushing relief valve internal hex plug [5/8 in Hex] from the pump housing. Remove the O-ring from the plug.
2. Remove the spring and poppet from the housing.
3. Do not alter the shims which are installed between the spring and valve plug, or interchange parts with another valve. Inspect the poppet and mating seat in the housing for damage or foreign material. Inspect the orifice in the valve poppet.
4. Install a new O-ring on the valve plug. Reinstall the poppet, spring, shims, and plug (with O-ring) into the pump housing [15-34 Nm (15-25 ft•lbf)].

Defeating Loop Flushing

1. Remove the loop flushing valve from the pump housing.
2. Install the defeat spool into the spool bore in the housing. Install the plain plug with O-ring into the housing [11/16 in Hex], and torque [27-47 Nm (20-35 ft•lbf)].
3. Remove the charge relief valve (these parts are not necessary).
4. Install the plain hex plug with O-ring into the end cap [5/8 in Hex], and torque [15-34 Nm (15-25 ft•lbf)].

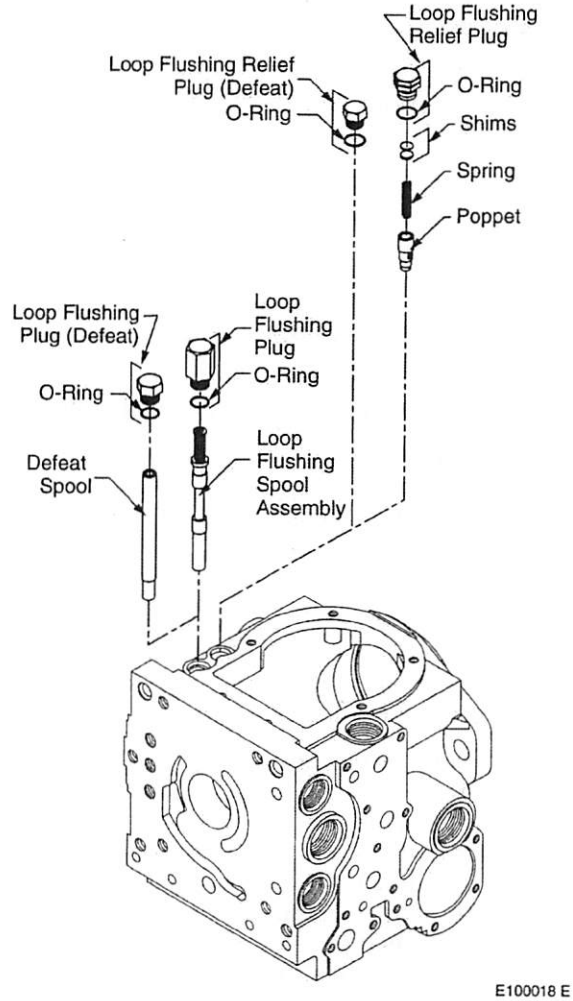

Loop Flushing Valve and Loop Flushing Defeat Components

4.13 Shaft Seal and Shaft Replacement

A lip type shaft seal is used in Series 42 pumps. This seal and/or the shaft can be replaced without major disassembly of the unit. Replacement generally requires removal of the pump from the machine.

1. Position the pump with the shaft facing up.

   NOTE: If the unit is positioned horizontally when the shaft is removed, the cylinder block could move out of place, making shaft installation difficult.

2. Remove the retaining ring from the housing.
3. Pull out seal carrier assembly.
4. Remove the O-ring from the seal carrier. To install a new shaft only, proceed to step 8.
5. Place the seal carrier in an arbor press with the shaft bearing side down, and press out the old seal. An appropriately sized pipe spacer or socket wrench can be used as a press tool. Once removed, the seal is not reusable.
6. Inspect the seal carrier and the new seal for damage. Inspect the sealing area on the shaft for rust, wear, or contamination. Polish the sealing area on the shaft if necessary.
7. Press the new seal into the shaft bearing side of the seal carrier. The seal lip must face the outside of the pump. Be careful not to damage the seal. The outside diameter of the seal may be coated with a sealant (e.g. Loctite High Performance Sealant #59231) prior to installation. This aids in preventing leaks caused by damage to the seal bore in the seal carrier.

   (continued)

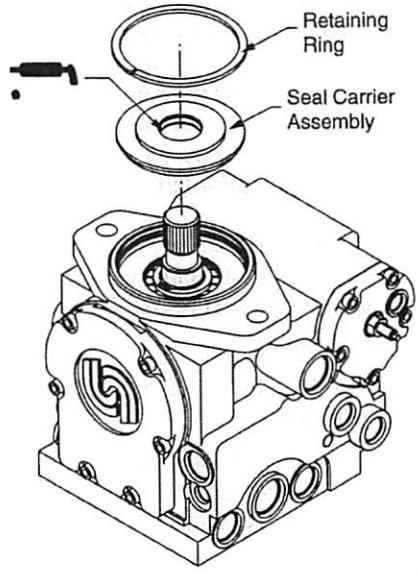

E100019 E

Shaft Seal Components

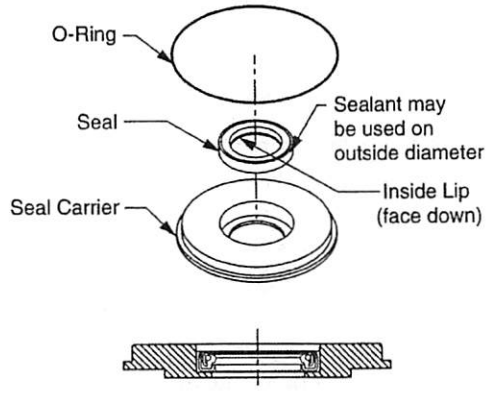

E100020 E

Installation of Shaft Seal

If the shaft is not being replaced proceed to step 11.

8. Remove the shaft and roller bearing assembly from the pump or motor. The bearing assembly can be transferred to the new shaft (steps 9 and 10).
9. Remove the retaining ring that secures roller bearing assembly with a snap ring plier. Remove the roller bearing assembly.
10. Place roller bearing assembly on new shaft and secure with the retaining ring.
11. Wrap the spline or key end of shaft with thin plastic to prevent damage to the seal lip during installation. Lubricate the inside diameter of the shaft seal with petroleum jelly.
12. Place the O-ring onto the shaft bearing and lubricate with petroleum jelly.
13. Slide the seal carrier assembly over the shaft and into the housing bore. Press against O-ring. Hold inward pressure against the shaft to compress the cylinder block spring while pressing the seal carrier into place.
14. Install the retaining ring.

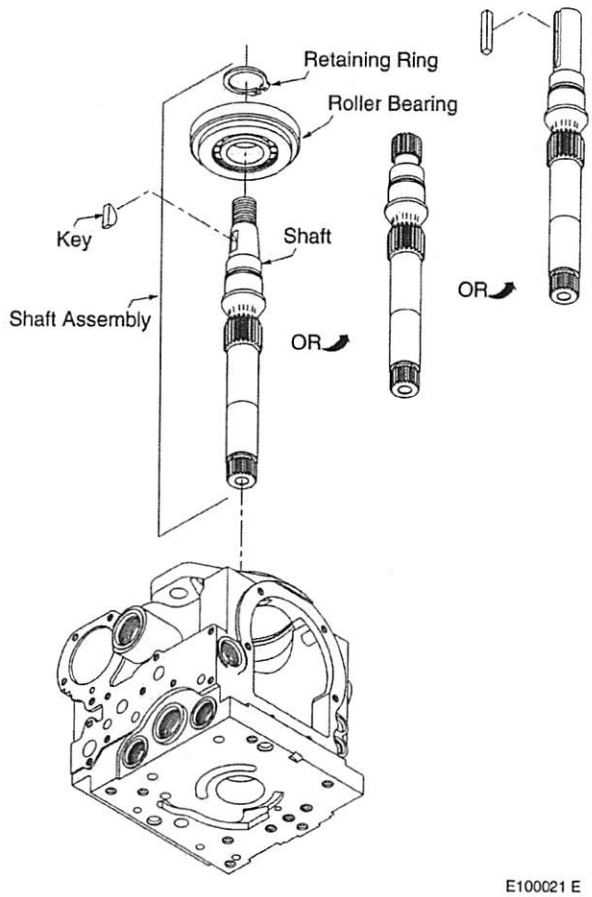

Shaft Components

4.14 Auxiliary Mounting Pads

The following procedure can be used to remove and install a new auxiliary mounting pad or to install a fresh O-ring for the current auxiliary mounting pad. Several auxiliary mounting pads are available.

Auxiliary mounting pads are integrated into the charge pump cover. When nothing is mounted on the pads, a flange cover is attached to protect the mounting flange. This cover is removed when mounting a pump.

Removal of Auxiliary Mounting Pad

1. Remove the auxiliary pump or remove the two screws retaining the flange cover ["A" Pad⇒9/16 in Hex; "B" Pad⇒3/4 in Hex]. Remove the O-ring.
2. Orient pump so that charge pump cover (auxiliary pad) is facing up.
3. Remove the charge pump cover. The auxiliary pad is integrated into the charge pump cover. Use a Torx T45 male driver to remove the screws.

   Note: If a different auxiliary pad is being installed, then a new drive coupling must be installed. To do this follow the instructions in the section on removing and installing the charge pump (next section).

   Note: If the charge pump components come out with the charge pump cover refer to section 4.15 on how to properly reinstall them.
4. Install a new charge pump cover gasket.
5. Install the charge pump cover (auxiliary pump mounting pad is integrated in cover).

   NOTE: The threaded screw holes in the auxiliary pump mounting pad used on very early production pumps with the SAE "A" pad option are drilled through into the area between the gerotor cover and charge pump cover. Any of these holes which are not used to attach the flange cover or auxiliary pump should be plugged with internal hex set screws installed hand tight to prevent the entrance of water or dirt into this area.
6. Attach the auxiliary pump. If no pump is to be attached on an auxiliary mounting pad, the pad should be protected with a flange cover and O-ring to prevent leakage.

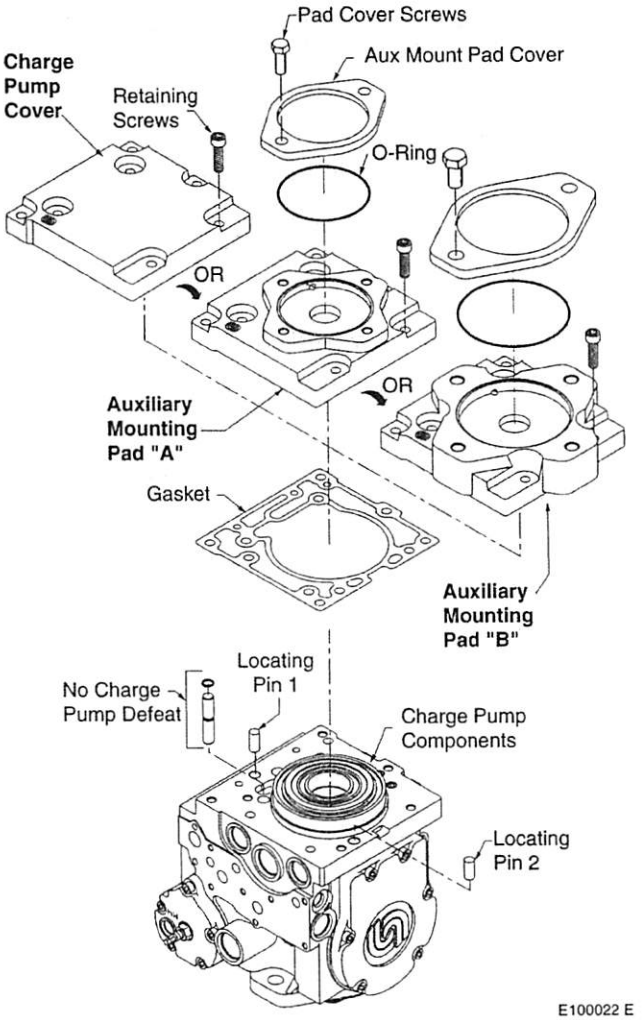

Auxiliary Pad Options and Components

4.15 Charge Pump

The charge pump may be disassembled to inspect and clean, or to change the auxiliary shaft drive coupling.

Note: For units without integral charge pumps see the last page of this section for additional information.

1. Remove auxiliary pump, if necessary.
2. Remove the screws retaining the charge pump cover to the pump housing [Torx T45] (seven (7) screws are used with the "no pad" or SAE "A" auxiliary mounting pad charge pump cover, while six (6) screws are used with the SAE "B" auxiliary mounting pad charge pump cover). Remove the charge pump cover, gasket, and the cover locating pins.
3. Remove the gerotor cover assembly from the charge pump cover or the back of the pump housing. Remove the gerotor cover O-rings. Two (2) O-rings are used on the gerotor cover of all pumps. (An additional O-ring was used on the gerotor cover of very early production pumps with the SAE "A" pad option.)
4. Remove the gerotor assembly from the gerotor cover or pump housing.
5. Remove the gerotor drive pin and drive coupling. Remove the gerotor cover locating pin from the pump housing.
6. Each part should be inspected separately if they are to be reused. If either of the gerotor assembly parts needs to be replaced, they must both be replaced. Always replace the O-rings and charge pump cover gasket. Inspect the journal bearing in the gerotor cover for excessive wear.
7. Prior to assembly, lubricate the gerotor assembly with clean hydraulic oil.
8. Install the gerotor drive pin into the hole in the drive coupling, and retain with grease or petroleum jelly.
9. Install the drive coupling onto the pump shaft with the smaller outside diameter oriented away from the pump shaft. **Different couplings are used with the different auxiliary pad options.**
10. Install the gerotor assembly onto the coupling.

(continued)

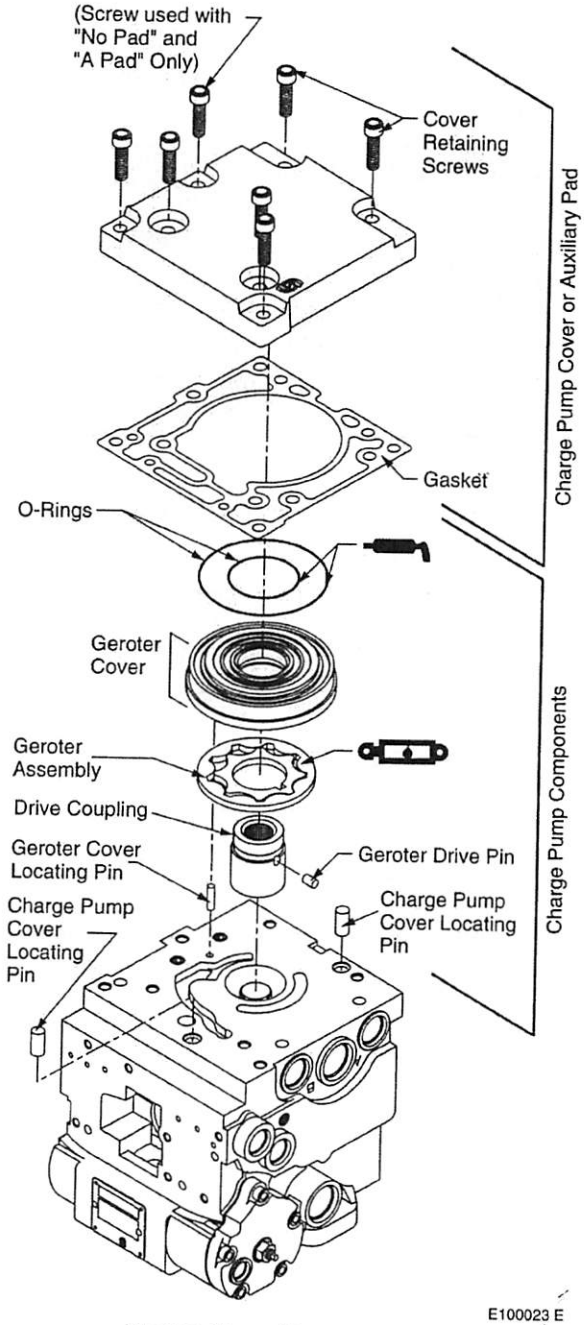

Charge Pump Components

4.18 Displacement Limiter Adjustment

Displacement limiters can limit the maximum swashplate position. For Series 42 pumps, displacement limiters are available on one or both sides of the servo piston.

Adjustment of the displacement limiters should be performed on a test stand.

WARNING
Care should be taken in adjusting displacement limiters to avoid undesirable speed conditions. The limiter screw must have full thread engagement in the servo piston cover, and the seal lock nut must be retorqued after every adjustment to prevent unexpected changes in operating conditions and external leakage during unit operation.

1. Mount pump on test stand.
2. Loosen displacement limiter seal lock nut [13 mm Hex]. Do not remove.
3. Adjust displacement limiter [4 mm Int. Hex]. **Tighten the seal lock nut every time the pump is to be tested** [20-26 Nm (15-19 ft•lbf)].

   One full turn of the displacement limiter adjustment screw will change the displacement of the pump *approximately* as follows.

28cc	3.6 cc/rev	0.22 in³/rev
41cc	5.0 cc/rev	0.31 in³/rev

4. After reaching proper displacement tighten the seal lock nut [20-26 Nm (15-19 ft•lbf)].

If necessary, repeat procedure for displacement limiter on other side.

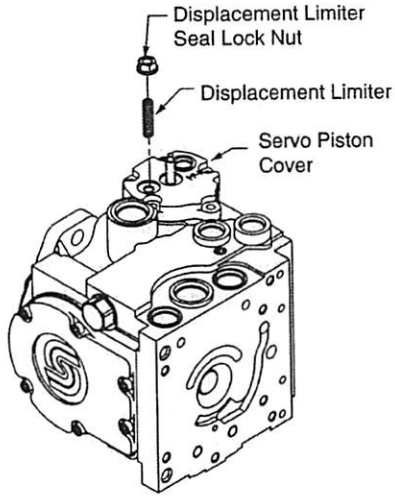

Displacement Limiter – Right Side (Side "1")
(Exploded View, No Need to Remove Limiter or Nut)

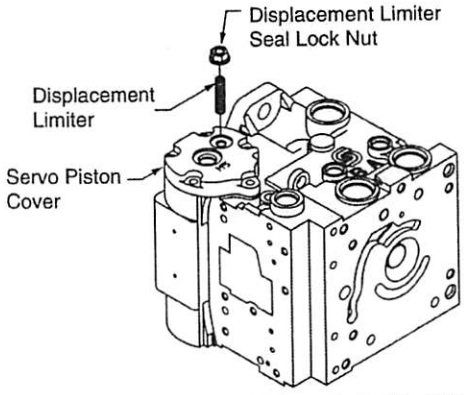

Displacement Limiter – Left Side (Side "2")
(Exploded View, No Need to Remove Limiter or Nut)

E100027 E

Displacement Limiters

5. Exploded View Parts Drawings

5.1 Shaft Options

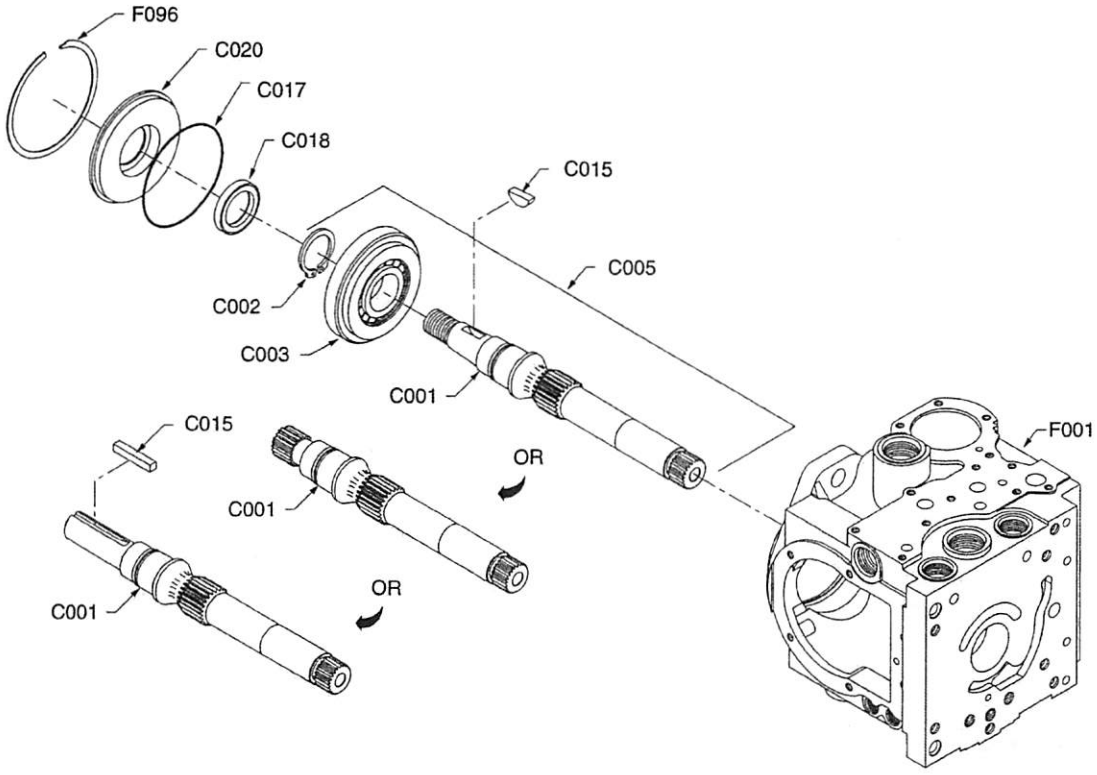

E100028

5.4 Control Options

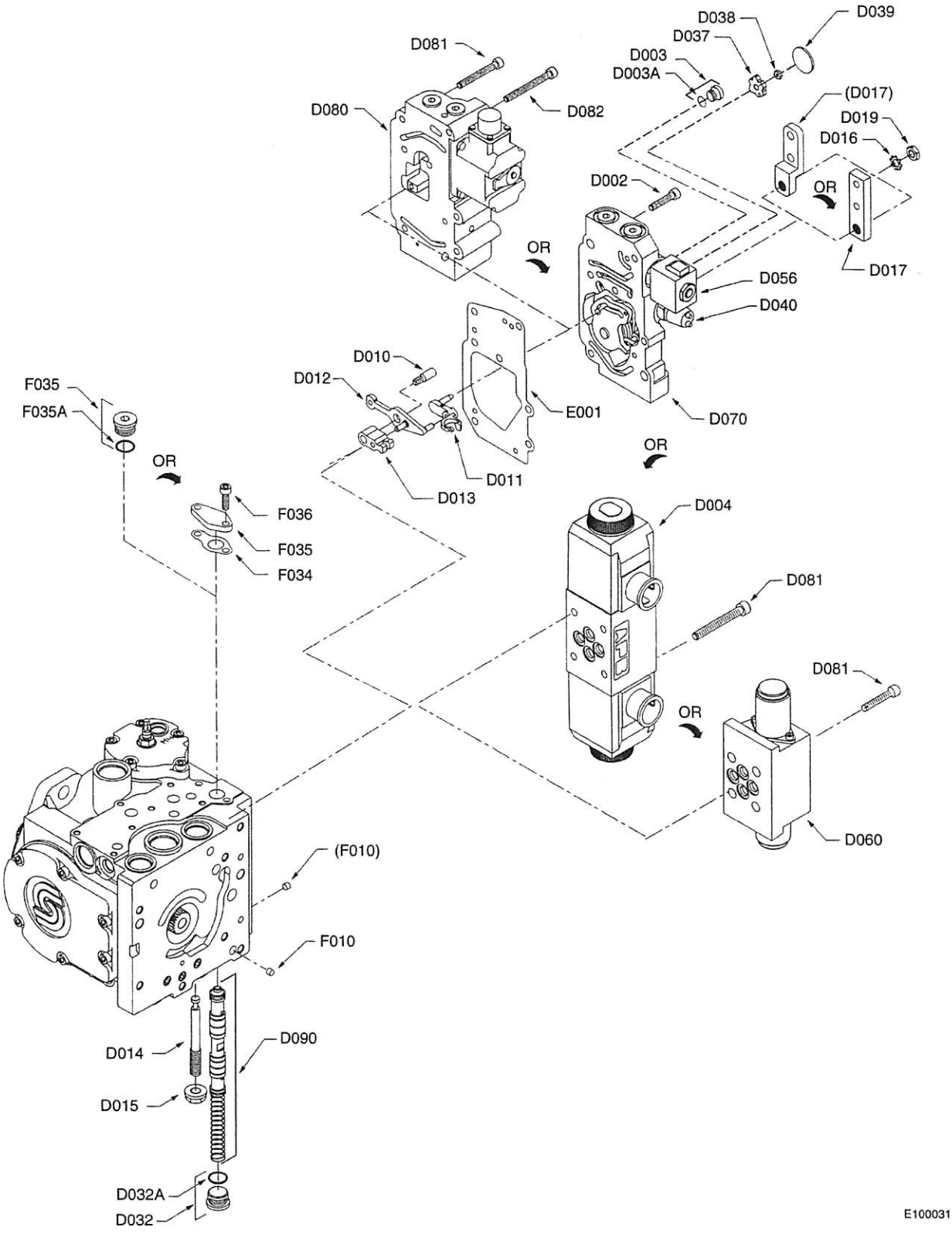

Notes

SAUER SUNDSTRAND

Hydraulic Power Systems

SAUER-SUNDSTRAND Hydraulic Power Systems - Market Leaders Worldwide

SAUER-SUNDSTRAND is a world leader in the design and manufacture of Hydraulic Power Systems. Research and development resources in both North America and Europe enable SAUER-SUNDSTRAND to offer a wide range of design solutions utilizing hydraulic power system technology.

SAUER-SUNDSTRAND specializes in integrating a full range of system components to provide vehicle designers with the most advanced total-design system.

SAUER-SUNDSTRAND is Your World Source for Controlled Hydraulic Power Systems.

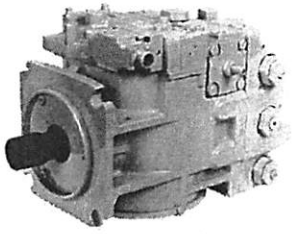

Heavy Duty Axial Piston Pumps and Motors

Heavy Duty Bent Axis Variable Motors

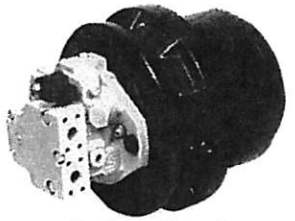

Cartridge Motors/ Compact Wheel Drives

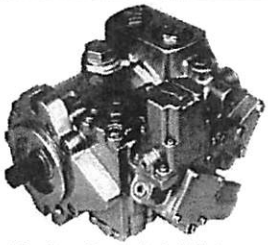

Medium Duty Axial Piston Pumps and Motors

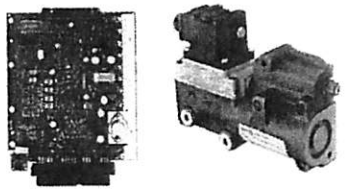

Microcontrollers and Electrohydraulic Controls

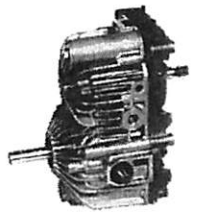

Hydrostatic Transmission Packages

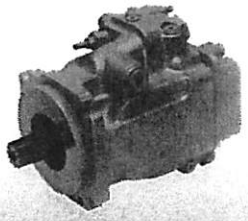

Open Circuit Axial Piston Pumps

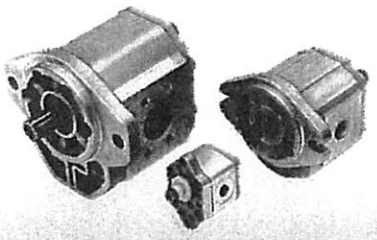

Gear Pumps and Motors

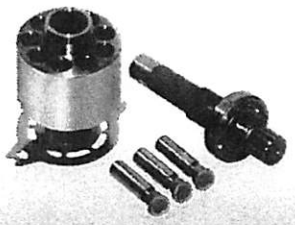

Genuine Service Parts

Worldwide Service Support

SAUER-SUNDSTRAND provides comprehensive worldwide service for its products through an extensive network of Authorized Service Centers strategically located in all parts of the world.

Look to SAUER-SUNDSTRAND for the best in WORLDWIDE SERVICE.

SAUER SUNDSTRAND

SAUER-SUNDSTRAND COMPANY
2800 East 13th Street
Ames IA 50010 • U.S.A.
Phone: (515) 239-6000 • FAX: (515) 239-6618

SAUER-SUNDSTRAND GMBH & CO.
Postfach 2460 • D-24531 Neumünster
Krokamp 35 • D-24539 Neumünster • Germany
Phone: (04321) 871-0 • Fax: (04321) 871 122

SI-SPV42 E • 06/96 • 300093A
BLN-10093 • Rev A • June 1996

CHAPTER 5

Hydraulic Overload Protection Calibration Procedure

(Electric Version)

SUPER 5000, SUPER 6000, & PATRIOT 40/50 units only!

Requirements for test:

2,000 lbs. plus 200 lbs. is required for this procedure.

- **STEP 1.** Set main control valve pressure to 3,000 PSI at full throttle.
- **STEP 2.** Set outriggers.
- **STEP 3.** Rotate boom 90° to side of machine at 0° level.
- **STEP 4.** Extend boom 2 (Steel) until winch line reaches 20' from center of turret.
- **STEP 5.** Adjust main lift relief valve to lift 2,000 lbs. at full throttle.
- **STEP 6.** Add 200 lbs. proceed to lift; main lift relief valve will prevent lift function. If main lift relief valve does not prevent lift function, readjust.
- **STEP 7.** Initial setting of hydraulic overload protection pressure switch 1,900 set, 1,100 reset.
- **STEP 8.** Adjust hydraulic overload protection pressure switch to lift 2,000 lbs. with winch function at full throttle.
- **STEP 9.** Adjust reset pressure 800 PSI lower than set pressure.
- **STEP 10.** Add 200 lbs. proceed to winch up, hydraulic overload protection will prevent winch up, boom 1 extend, boom 2 extend, and boom down. If pressure switch does not prevent previous functions readjust. Ensure locking ring is in lock position on switch.
- **STEP 11.** Winch down to relieve hydraulic overload protection system.
- **STEP 12.** Remove weights, return boom to boom stow position.

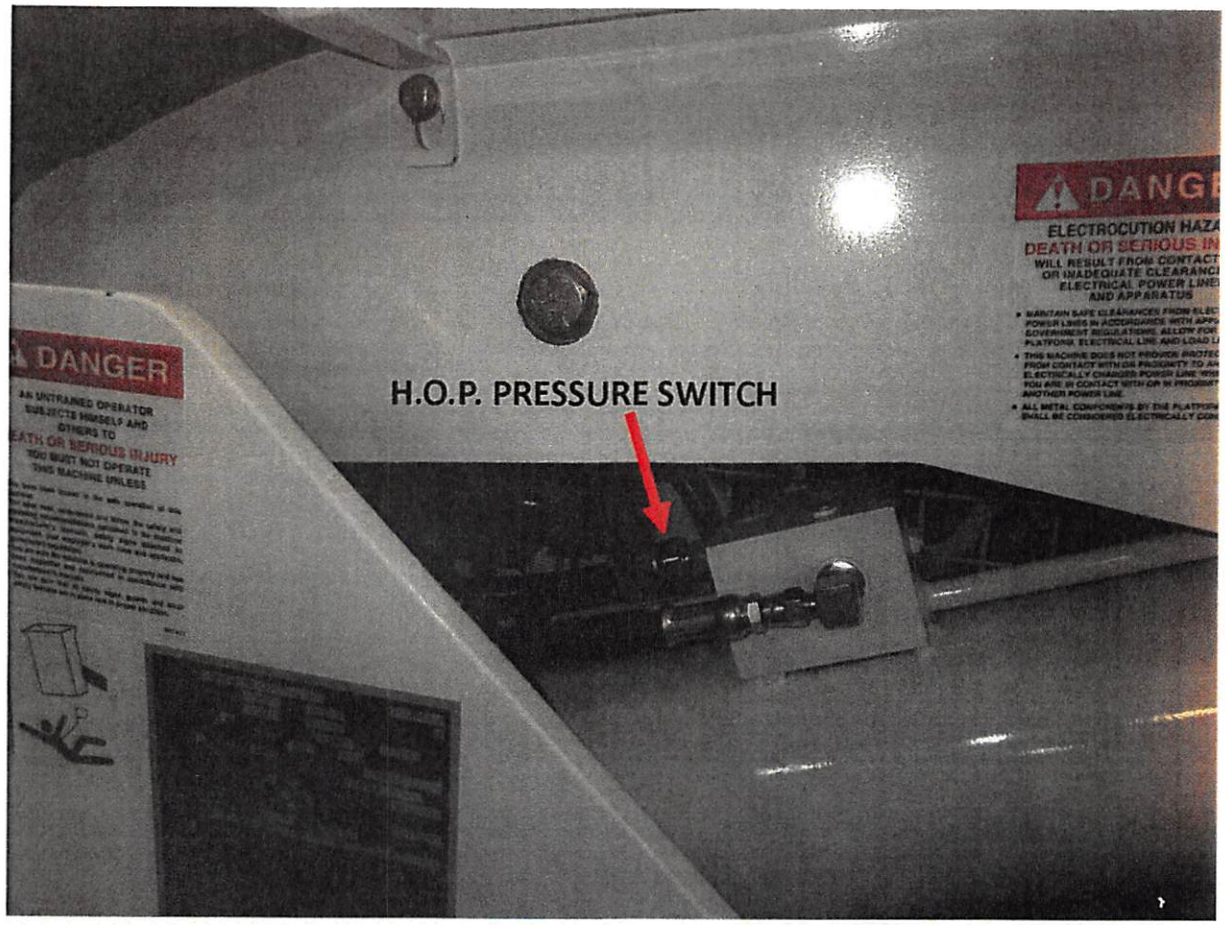
H.O.P. PRESSURE SWITCH
DANGER
DANGER

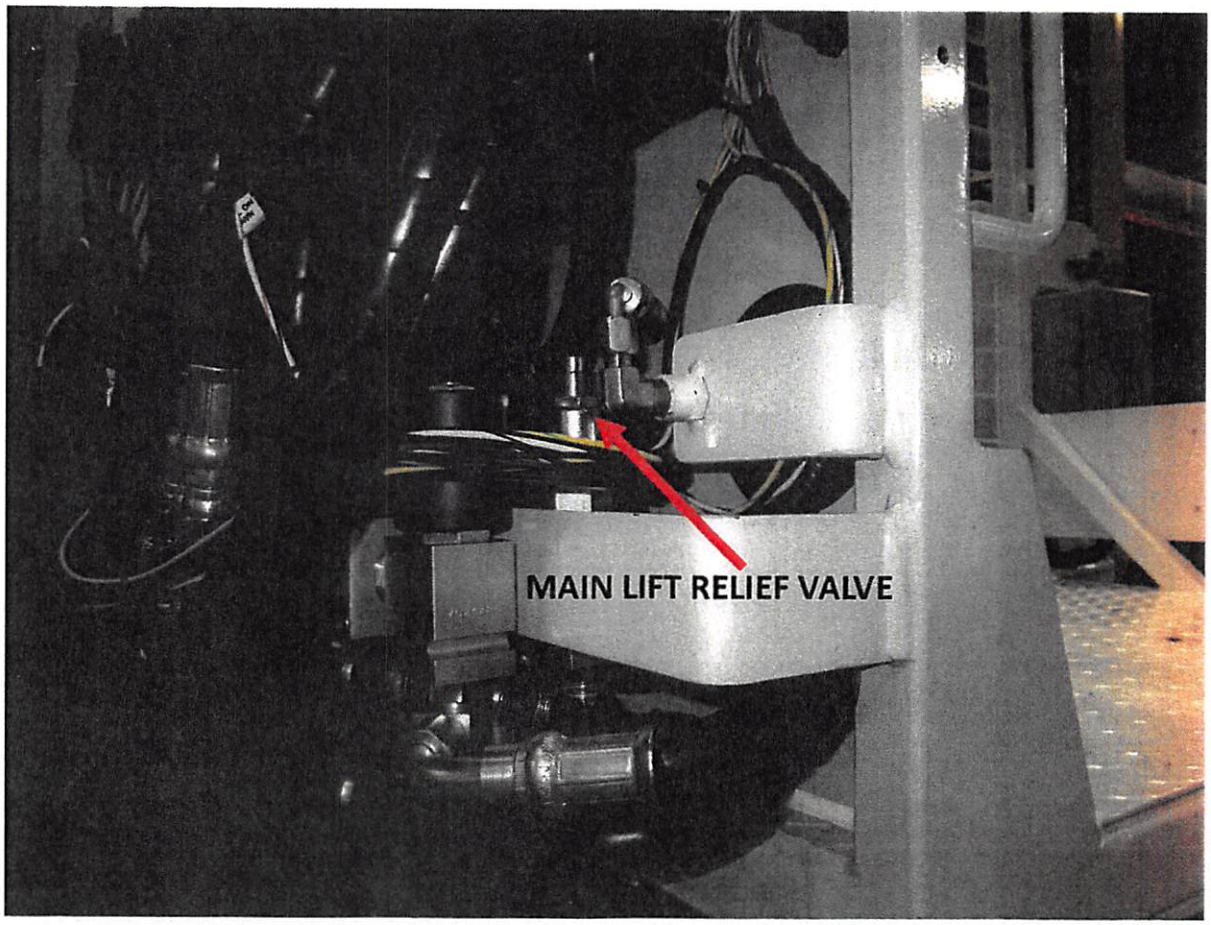
MAIN LIFT RELIEF VALVE

ROTZLER TITAN

TC2

OWNER'S MANUAL

INSTALLATION, OPERATION AND MAINTENANCE INSTRUCTIONS FOR ROTZLER TITAN PLANETARY HYDRAULIC WINCHES

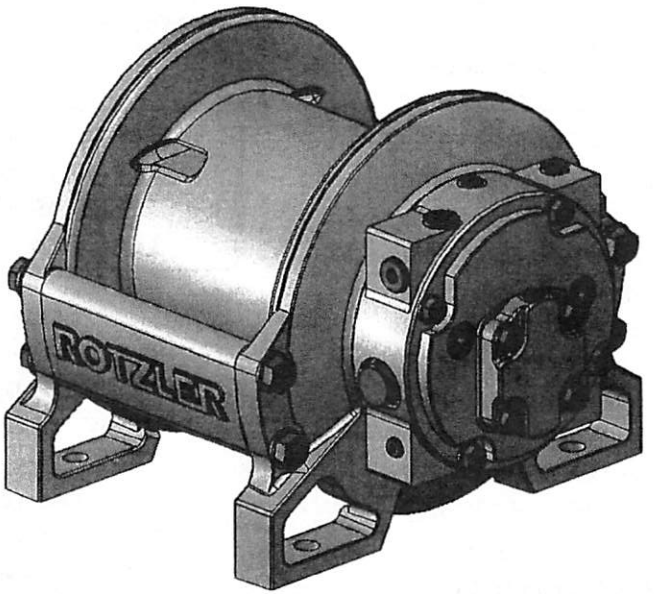

THIS MANUAL CONTAINS IMPORTANT INFORMATION FOR THE SAFE USE OF THIS WINCH. READ AND UNDERSTAND ALL INSTRUCTIONS BEFORE INSTALLING, OPERATING OR MAINTAINING THIS WINCH. MAKE THIS MANUAL AVAILABLE TO RESPONSIBLE PERSONNEL.

WARRANTY - INTRODUCTION

The Identification Label, located on the outside of the winch Final Base, lists important operating specifications for the particular winch. This Label must not be removed, altered or have its technical data obscured. If the data becomes illegible, contact the factory for a replacement Label.

The cable and other load lifting attachments are not part of the winch. Subsequently, Rotzler Inc. cannot be held responsible for any damages resulting from their failure.

WARRANTY

IMPORTANT: ROTZLER TITAN WINCHES ARE NOT DESIGNED NOR INTENDED TO MOVE PERSONNEL. ROTZLER INC. CANNOT BE HELD RESPONSIBLE FOR ACCIDENTS OCCURRING FROM SUCH USE.

I.) Rotzler Inc. warrants each new Titan winch, assemblies and components thereof, to be free from defects in materials and workmanship for a period of two years from the date of the original purchase by Rotzler Inc.'s original customer, provided the unit is installed, operated and maintained in accordance with the instructions given in the Owner's Manual.

II.) Wearable or consumable components such as O-rings, Shaft Seals, Brake Discs and Brake Separators are excluded from this warranty unless a material or workmanship defect is detected in these components at the time of the initial winch installation.

III.) The obligation of Rotzler Inc. under this warranty is exclusively limited. Rotzler Inc. reserves the option of either replacing all components, supplied and manufactured by Rotzler Inc. and found to be defective by reason of faulty material or workmanship, or furnishing a complete replacement winch. In either case, the replacement components or winch will be supplied freight collect, Free Carrier, the factory.

IV.) Rotzler Inc. shall not be liable for any consequential damages or expenses of disconnecting or removing a unit or components thereof, nor any cost incurred in diagnosing a failure.

V.) Rotzler Inc. neither assumes nor authorizes any person to assume on their behalf, any other liabilities in connection with the sale of Rotzler Inc. products.

VI.) This warranty shall not apply to any units which have been repaired or altered without express written consent from Rotzler Inc.

VII.) This warranty shall not apply to winches subjected to misuse or neglect or operated or maintained other than in strict accordance with the specifications provided and the instructions given in this Owner's Manual.

1. INTRODUCTION PAGE
DESCRIPTION OF WINCH FUNCTION 2
MODEL CODE 3
AVAILABLE OPTIONS 3
AVAILABLE ACCESSORIES 3
PERFOMANCE DATA 3

2. TECHNICAL DATA
TECHNICAL DATA – TC2.XX.31.XX.0 4

3. HYDRAULIC SYSTEM
HYDRAULIC SYSTEM 6

4. INSTALLATION
WINCH INSTALLATION 7
ADDING GEAR LUBRICATING OIL 7
HYDRAULIC SYSTEM CONNECTION 8
CABLE SELECTION AND INSTALLATION 8
INSTALLATION INSPECTION 9

5. OPERATION
SAFETY INSTRUCTIONS 10
OPERATING INSTRUCTIONS 10
ALLOWABLE OPERATING TEMPERATURE 10
CABLE HANDLING INSTRUCTIONS 10
SPECIAL INSTRUCTIONS – EXTERNAL BRAKE RELEASE 13

6. MAINTENANCE PAGE
INTRODUCTION 12
CABLE MAINTENANCE 12
PREVENTIVE MAINTENANCE 12
HYDRAULIC SYSTEM TROUBLE SHOOTING 13
WINCH TROUBLE SHOOTING 14
GENERAL SERVICE INSTRUCTIONS 17
SERVICE INSTRUCTIONS 18
SPECIAL INSTRUCTIONS – STAINLESS STEEL SCREWS 19

7. ORDERING
TECHNICAL INFORMATION 19
SEAL AND SERVICE KITS 19
ORDERING REPLACEMENT COMPONENTS 19

8. DRAWINGS
WINCH DRAWING 20
M11C-31 STANDARD MOTOR ASSEMBLY DRAWING 22
PRIMARY ASSEMBLY DRAWING 24
CLUTCH ASSEMBLY DRAWING 26
FINAL ASSEMBLY DRAWING 28

1. INTRODUCTION

⚠ WARNING

FAILURE TO FOLLOW RECOMMENDATIONS CONTAINED IN THIS MANUAL COULD RESULT IN WINCH FAILURE AND ALLOW THE LOAD TO DROP, CAUSING PROPERTY DAMAGE, SEVERE INJURY OR DEATH. READ AND UNDERSTAND THIS MANUAL BEFORE INSTALLING, OPERATING OR MAINTAINING THIS WINCH.

Be familiar and comply with all local rules and regulations governing winches, hoisting and pulling units.

Rotzler Inc. Titan winches are not designed, nor intended to lift or move personnel.

Do not hesitate to contact Rotzler Inc. for assistance regarding the installation, operation and maintenance of the winch.

Rotzler Inc. reserves the right to change the design and documentation of the winch without notice and without obligation.

The copyright of this manual and other documentation belongs to Rotzler Inc. The contents are not to be copied in whole or in part, communicated to others or used for competitive purposes.

DESCRIPTION OF WINCH FUNCTION

- **DESCRIPTION OF WINCH FUNCTION - HOISTING**

Hydraulic pressure applied at the Motor hoisting port rotates the primary sun gear. The high speed sun gear rotation is reduced through a two stage planetary gear reduction to provide high torque rotation of the Cable Drum.

The Sprag Clutch allows the Brake Shaft to turn freely in the hoisting direction, independent of the winch brake system.

Hydraulic pressure, proportional to the load that is being lifted, develops at the Motor hoisting port.

Increasing the volume of oil supplied to the Motor increases the hoisting speed. When the oil supply is halted, the winch stops hoisting. The Sprag Clutch then locks the Brake Shaft to the brake system and prevents the load from lowering.

- **DESCRIPTION OF WINCH FUNCTION - LOWERING**

When the winch is not moving, the Sprag Clutch locks the Brake Shaft to the spring applied, pressure released brake system and secures the load.

Some of the hydraulic fluid supplied to the Motor is diverted to the Brake Piston. As the operator increases pressure at the Motor lowering port, pressure also develops at the Brake Piston and partially releases the brake. When the diminished brake is no longer able to sustain the combined torque of the motor and load, the Brake Discs slip and the winch begins to lower the load.

The Motor regulates pressure at the Brake Piston to control the speed of the lowering load. The force of gravity on the lowering load attempts to turn the winch Drum faster than the operator requires. The motor is then forced to turn faster than the hydraulic supply can satisfy and consumes oil, reducing pressure at the Brake Piston. The brake torque then increases and slows the load. In this manner, the Motor continuously regulates the Brake Piston pressure and positively controls the lowering load without using a counter-balance or holding valve.

Increasing the volume of oil supplied to the hydraulic motor increases the lowering speed. When the oil supply is halted, the winch stops lowering and the brake fully applies and secures the load.

When lowering a load, heat is generated as the Brake Discs slip through the Brake Separators. An orifice in the Brake Piston restricts the volume of oil permitted to circulate through the brake plate stack and dissipate this heat.

MODEL CODE

A model code describes the winch configuration as follows:

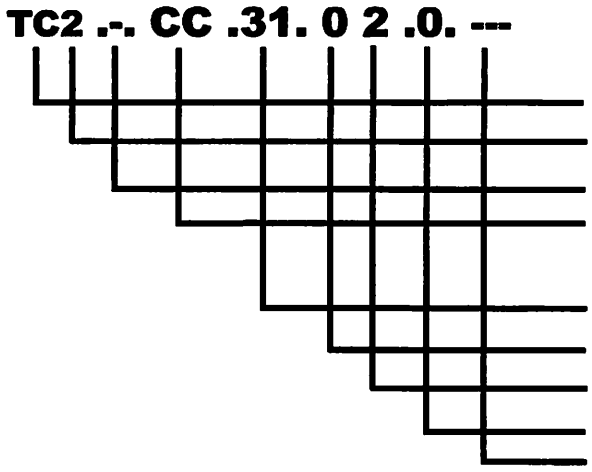

SERIES: Rotzler Titan TC Series Winch
SIZE: Nominal Bare Drum Line Pull Capacity (tonnes)
REVISION: Revision level indicates design changes for internal use only
ROTATION: Direction of Cable Drum rotation when hoisting (looking at the motor):
CC = Counterclockwise (standard) CW = Clockwise
MOTOR: Hydraulic Motor displacement: 31cc (standard)
VALVE: Optional counterbalance valve: 0 = no valve (standard) V = CB valve
MOTOR PORT POSITION: Direction of Motor ports: 2 = horizontal right (standard)
CABLE DRUM: Cable Drum configuration: 0 = Standard
SPECIAL OPTIONS: Used for options not described above.

AVAILABLE OPTIONS

Rotzler Titan TC2 winches are available with the following options:

- CC or CW Cable Drum rotation when hoisting.
- Other motors to suit special hydraulic systems.
- Special paint finish.
- Stainless steel screws for improved corrosion resistance.

AVAILABLE ACCESSORIES

Accessories for use with Rotzler Titan TC2 winches are available as follows:

- External Brake Release Kit allows releasing the brake and lowering a load with an auxiliary hydraulic supply capable of delivering at least 2 USGPM [7.5L/min] at 1000 psi [70 bar].

PERFORMANCE DATA

Performance data follows for winches with standard cable and optional motors. When other options are supplied, the particular performance data is inserted as required.

- **IDENTIFICATION LABEL**

An Identification Label is located on the outside of the Final Base, identifying the specific winch serial number and important technical data critical for the safe operation model configuration, of the winch. An area is provided at the back of this manual to record this data for future reference.

This Label must not be removed, altered or have its technical data obscured. If the data becomes illegible, contact Rotzler Inc. for a replacement label.

2. TECHNICAL DATA – TC2.XX.31.XX.0

#TC2.**.31.**.0 REV C

To safely support the load, maintain at least three wraps of rope on the Cable Drum at all times.

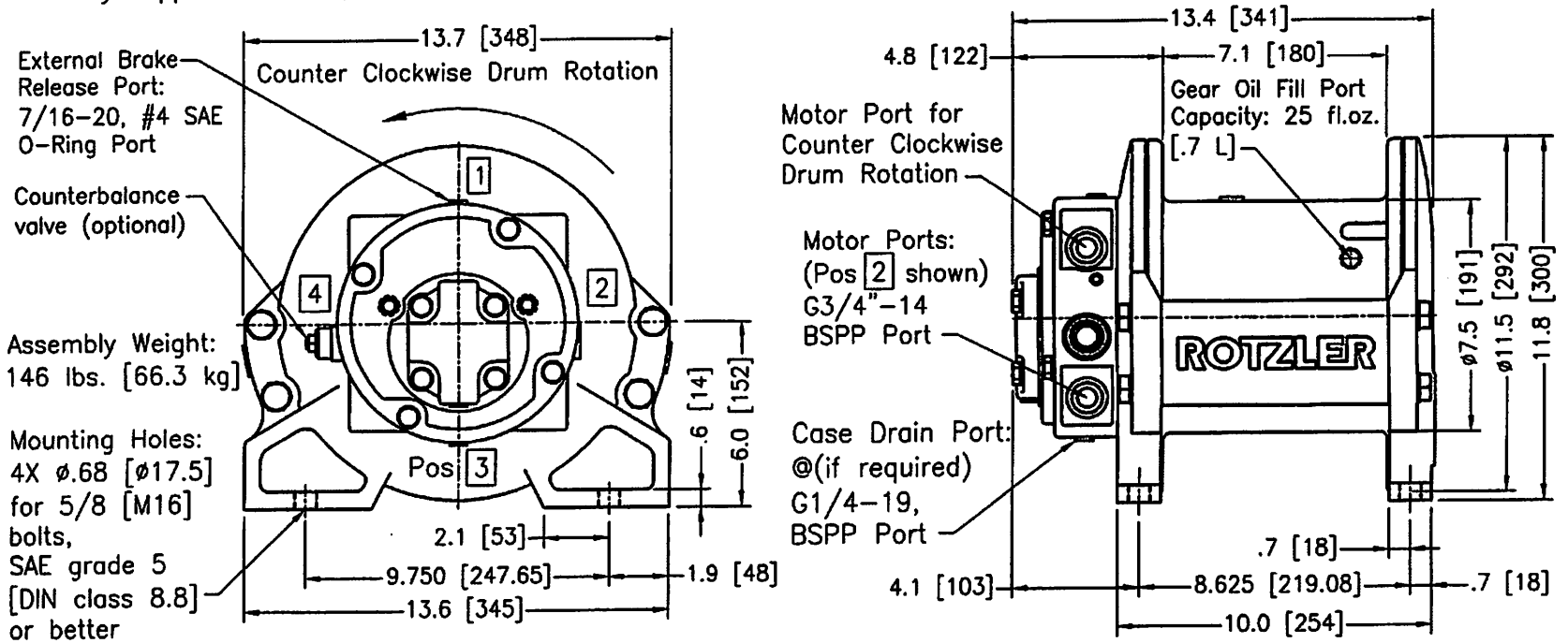

Dimensions are in inches [millimeters]. Cable Wedge accomodates 1/4" to 7/16" [6mm to 11mm] diameter wire rope.
@ A Case Drain line is recommended when Return Line back pressure exceeds 200 psi [14 bar].

- **CABLE DRUM STORAGE CAPACITY**

CABLE SIZE	1/4"	5/16"	3/8"	7/16"	6 mm	8 mm	9 mm	10 mm	11 mm
STORAGE CAPACITY	447'	308'	212'	142'	169 m	93 m	68 m	62 m	44 m

- **LINE PULL –TC2.XX.31.XX.0**

SYSTEM PRESSURE	DRUM TORQUE	LINE PULL AT SYSTEM PRESSURE
Maximum system pressure: 3000 psi [207 bar]	23653 in-lb [2673 N·m]	Bare Drum: 6000 lb [26.7 kN]
		Full Drum: 4500 lb [20 kN]
Minimum System Pressure: 1000 psi [70 bar]	7884 in-lb [891 N·m]	Bare Drum: 2000 lb [9 kN]
		Full Drum: 1500 lb [6.7 kN]

- **LINE SPEED – TC2.XX.31.XX.0**

SYSTEM VOLUME	DRUM SPEED	LINE SPEED AT SYSTEM VOLUME
Maximum System Volume: 22 USGPM [83 L/min]	64 RPM	Bare Drum: 132 ft/min [40 m/min]
		Full Drum: 176 ft/min [54 m/min]
Minimum System Volume: 5 USGPM [20 L/min]	15 RPM	Bare Drum: 30 ft/min [9 m/min]
		Full Drum: 40 ft/min [12 m/min]

- **PERFORMANCE GRAPHS – TC2.XX.31.XX.0**

The following graphs show the winch performance with 3/8" diameter cable on various layers of the Cable Drum.

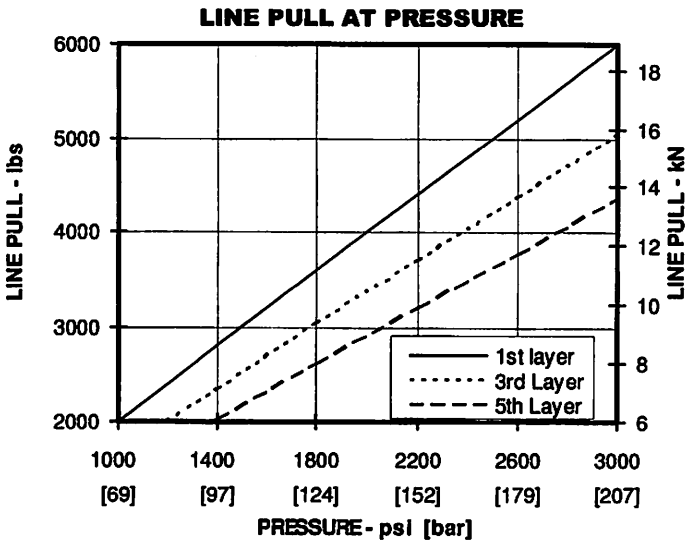

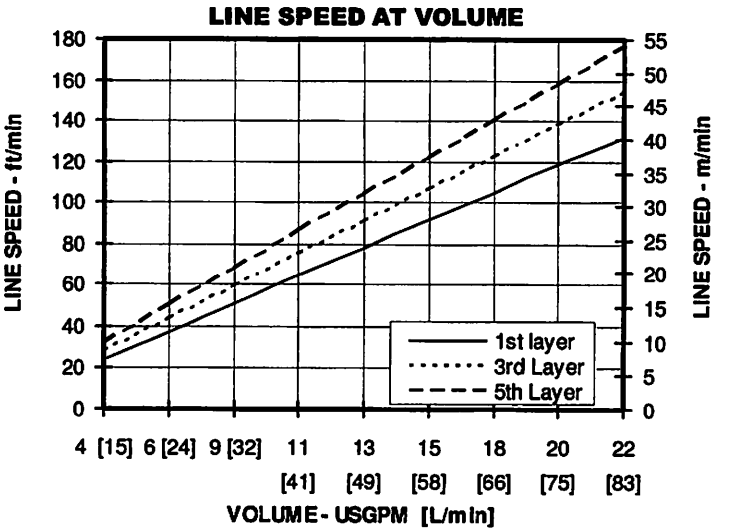

3. HYDRAULIC SYSTEM

To achieve the specified line pull and line speed performance, the hydraulic power unit must be capable of delivering the specified hydraulic pressure and flow.

The maximum allowable return line back pressure is 200 psi [14 bar]. If system back pressure cannot be limited to 200 psi [14 bar], remove Motor Plug #293 and connect a hose to drain the excess brake cavity pressure directly to tank. Do not connect to a common return line.

- **HYDRAULIC SYSTEM FLUID** - Use premium grade petroleum based hydraulic fluid. For optimum performance the fluid viscosity should be maintained between 60 and 1400 SUS [10 and 300 cSt]. The operating viscosity in extreme conditions, for short periods of time, should not exceed 45 and 4545 SUS [10 and 1000 cSt]. The recommended operating temperature range of the hydraulic fluid is between 5 and 150 deg F [-15 and 66 deg C].
- **CONTROL VALVE** - A four-way three position, spring centered control valve with motor spool is recommended. For optimum winch performance, work ports should be connected to tank in neutral position. If a control valve with cylinder spool must be used, remove Motor Plug #240 and connect a hose to drain the excess brake cavity pressure directly to tank. Do not connect to a common return line. To provide smooth control at low speeds, a valve with good metering capability is required.
- **RELIEF VALVE** - A pressure relief valve is required to limit the maximum system pressure supplied to the winch and avoid possible over load damage.
- **RESERVOIR** - A well designed and manufactured reservoir is important. Ensuring return lines enter the reservoir below the fluid level and using baffles to divert the oil path reduces air entrapment. To prevent oil contamination, the reservoir must be constructed and maintained in a clean condition. The reservoir must have sufficient surface cooling capacity to dissipate the heat generated in the oil by the brake during lowering.
- **FILTER** - A high quality, well maintained filter is an important component in any hydraulic system. Typically, other system components will dictate the required filtration level. The recommended minimum requirement is a 10 micron filter.
- **HOSES** - Size hydraulic hoses and fittings to accommodate the winch maximum hydraulic pressure and flow. The following minimum recommendation is made for the Rotzler Titan TC2 winch:
  - Standard Motor pressure hoses: 1" [25 mm] diameter, 3000 psi [207 bar] operating pressure, grade SAE 100R9 or better. Use larger diameter hoses when extra long lines are required. Refer to factory for hose recommendations when using optional motors.

When rigid tube or pipe is used to plumb the control valve, minimize vibration damage by using short flexible jumper hoses immediately at the winch.

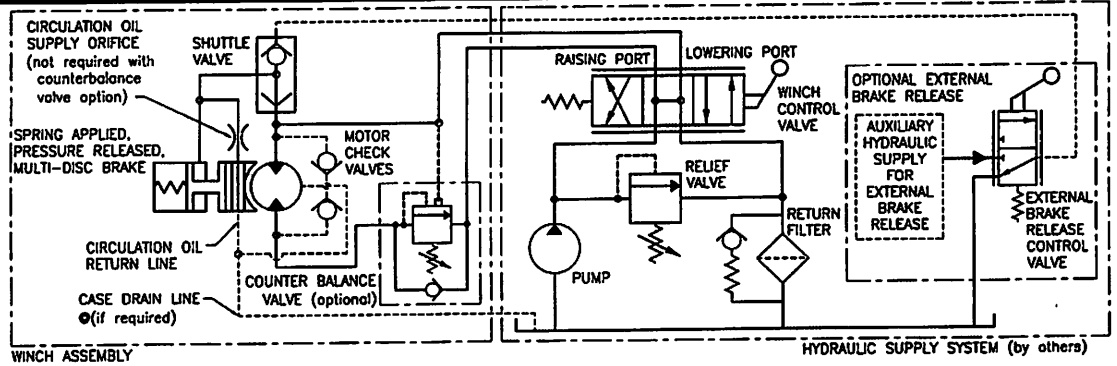

TC2.**.31.**.0 REV C

4. INSTALLATION

Rotzler Titan winches are to be installed by trained and authorized personnel who have read and understand the installation instructions in this manual. This manual is to be kept near the winch and made accessible to installation personnel.

⚠ WARNING

FAILURE TO FOLLOW WINCH MOUNTING INSTRUCTIONS COULD RESULT IN WINCH FAILURE AND ALLOW THE LOAD TO DROP, CAUSING PROPERTY DAMAGE, SEVERE INJURY OR DEATH. READ AND UNDERSTAND THE FOLLOWING INSTRUCTIONS BEFORE INSTALLING THIS WINCH.

IMPORTANT: FOR PROPER LUBRICATION OF THE INTERNAL GEAR COMPONENTS, MOUNT THE WINCH HORIZONTALLY.

WINCH INSTALLATION

Initial winch mounting is critical for safe operation and optimum performance. Prevent distortion of the winch's centerline by mounting as follows:

- Verify that the winch mounting support structure is adequately designed and constructed to withstand the intended loads with minimal deflection.
- Verify that the mounting surface and the underside of the winch are clean of rust, scale, loose paint, dirt, oil and grease.
- Position the winch on the mounting structure.
- Use hardened steel Structural flat washers between the mounting bolt and the cast Base.
- Inspect each of the four winch feet for contact with the mounting surface. If one of the feet does not contact the mounting surface, correct as follows:
  - o Install the recommended mounting bolts (refer to **GENERAL DIMENSIONS** for required size and grade) on the three mounting feet that are in contact with the mounting surface. Lightly tighten until snug.
  - o Use shim stock to securely fill the gap beneath the fourth mounting foot.
  - o Install the fourth mounting bolt.
  - o Fully tighten all four mounting bolts to torque recommended for particular connection design.

ADDING GEAR LUBRICATING OIL

IMPORTANT: THE WINCH IS SHIPPED FROM THE FACTORY WITHOUT GEAR LUBRICATING OIL. TO PREVENT MAJOR WINCH COMPONENT FAILURE, ADD GEAR LUBRICATING OIL PRIOR TO RUNNING THE WINCH.

Add gear lubricating oil as follows:

- Remove the Pipe Plug located on the Cable Drum barrel and the Relief Valve located on the outside of the Final Base.
- Pour high quality SAE 90 gear lubricant oil into the Cable Drum through the Plug port (refer to **GENERAL DIMENSIONS** for required volume). In severe applications, gear tooth wear can be reduced by using a high performance gear lubricant such as Swepco #201 Multi-Purpose Gear Lube.
- Fill the Cable Drum until gear oil appears at the Final Base Relief Valve port. The Cable Drum is now properly half filled with gear oil.
- Install the Relief Valve and Cable Drum Pipe Plug, using Loctite #565 Thread Sealant to seal threads.

HYDRAULIC SYSTEM CONNECTION

Recommendations for the selection and arrangement of hydraulic system components are given in the **HYDRAULIC SYSTEM** section of this manual.

Before connecting the winch, verify that the hydraulic system produces the required hydraulic fluid pressure and volume. The Motor hoisting and lowering ports are identified in **GENERAL DIMENSIONS**.

Run the winch without load in both directions using the hydraulic system control valve. Ensure that the brake is effective in the appropriate direction of rotation by verifying that the motor develops significantly higher pressure when lowering than when hoisting.

CABLE SELECTION AND INSTALLATION

The cable and other load lifting attachments are not part of the winch and are not covered by this manual. Refer to the manufacturer's recommendations for proper cable selection, handling, inspection and maintenance.

It is the responsibility of the user to identify and follow applicable local regulations governing lifting operations and equipment, including the selection and allowable loading of cable.

- **CABLE INSTALLATION - FLEET ANGLE**

For proper spooling onto the Cable Drum, the cable angle must not exceed the maximum allowable fleet angle as indicated below. To satisfy this requirement, the distance from the drum to the first sheave must exceed 14 times the distance between the drum flanges.

#720-004 REV C

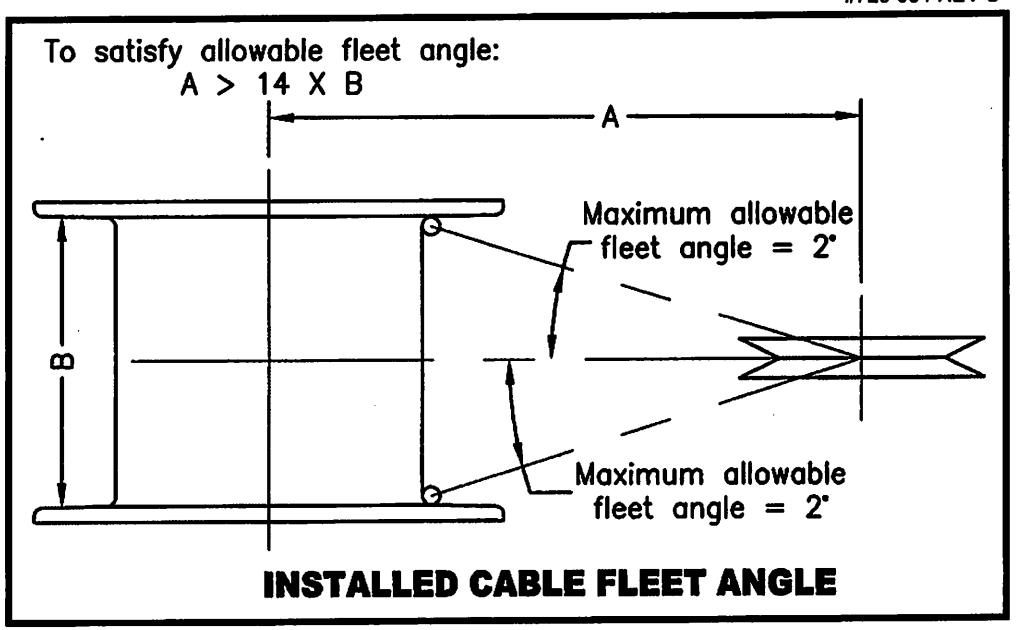

INSTALLED CABLE FLEET ANGLE

- **CONNECTING THE CABLE**

⚠ WARNING

IMPROPER CABLE CONNECTION COULD ALLOW THE LOAD TO DROP, CAUSING PROPERTY DAMAGE, SEVERE INJURY OR DEATH. READ AND UNDERSTAND THE FOLLOWING INSTRUCTIONS BEFORE CONNECTING THE CABLE.

The winch brake can support the load in one direction only. It is therefore critical to ensure that the cable is correctly connected to the Drum.

The Cable Drum has a single pocket which allows the cable to be connected for either counter clockwise or clockwise hoisting. When shipped from the factory, a Rotation Label indicating direction of hoisting and connection instructions is attached to the Cable Drum.

Connect the cable to the Drum as follows (refer to diagram):

- o Identify the appropriate direction of rotation from the Rotation Label.
- o Pass the cable through the cable slot as shown. Bring the loose end around and back into the slot to form a large loop.
- o Push the loose end of the cable through the slot until it is even with the opening. Do not let it protrude from the Drum barrel.
- o Insert the Cable Wedge tapered end first, into the slot at the center of the cable loop. Tighten the cable while maintaining the Wedge in position.
- o As the cable is pulled tight, ensure that the end of the cable stays even with the slot opening as shown.
- o Wind at least three complete wraps of cable onto the Cable Drum before connecting the load.

INSTALLATION INSPECTION

⚠ WARNING

HOISTING THE LOAD WITH AN IMPROPERLY INSTALLED WINCH COULD RESULT IN WINCH FAILURE AND ALLOW THE LOAD TO DROP, CAUSING PROPERTY DAMAGE, SEVERE INJURY OR DEATH.
INSPECT AND TEST WINCH INSTALLATION BEFORE HOISTING HEAVY LOADS TO POTENTIALLY DANGEROUS HEIGHTS.

Verify proper winch installation by slowly lifting and lowering a full test load to a safe height several times before lifting a heavy load to a potentially dangerous height.

#720-004 REV C

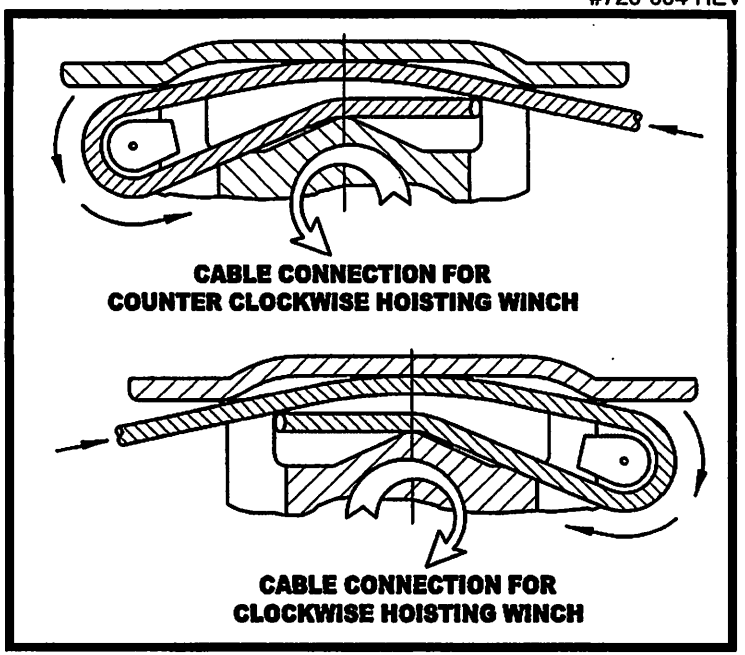

5. OPERATION

SAFETY INSTRUCTIONS

⚠ WARNING

IMPROPER WINCH OPERATION COULD ALLOW THE LOAD TO DROP, CAUSING PROPERTY DAMAGE, SEVERE INJURY OR DEATH. READ AND UNDERSTAND THE FOLLOWING INSTRUCTIONS BEFORE OPERATING THIS WINCH.

Rotzler Titan winches are to be operated by trained and authorized personnel who have read and understand the operating instructions in this manual. This manual is to be kept near the winch and made accessible to the operating personnel.

Rotzler Titan winches are not designed, nor intended to lift or move personnel.

Rotzler Titan winches must be installed and operated according to instructions given in this manual.

Operating and safety recommendations made by the manufacturers of other related equipment must also be followed.

It is the operator's responsibility to know and ensure that all local regulations governing hoisting operations are followed.

OPERATING INSTRUCTIONS

The hydraulic control valve controls the direction and speed of the winch. A valve with good metering characteristics will provide good low speed control of the load. Returning the valve to neutral allows the brake to apply and secure the load.

The Cable Wedge pocket is not intended to support the full load. To safely support the load, maintain at least three wraps of rope on the Cable Drum at all times.

The winch must be operated within the load and speed limits stated on the Final Base Identification Label.

When hoisting a load, the operator must maintain visual contact with the load and the immediate operating area. If the operator does not have clear sight of the load, auxiliary personnel or equipment must be used to ensure that the load is lifted safely.

Spooling is improved by maintaining tension on the wire rope.

ALLOWABLE OPERATING TEMPERATURE

Operate the winch only when the hydraulic fluid temperature is within the recommended operating temperature range specified in the **HYDRAULIC SYSTEM** section of this manual.

Operate the winch only when ambient temperature is between 5 and 140 deg F [-15 and 60 deg C].

Contact Rotzler Inc. if it is required to operate the winch in extreme temperatures, vibration, sand, dust or other detrimental environmental conditions.

CABLE HANDLING INSTRUCTIONS

When working with steel cable, always wear gloves. Never use your hands to guide a tight cable.

Do not allow the cable to pass over sharp edges.

Clean and check the cable after every use. Be familiar and comply with all local rules and regulations governing cable inspection and replacement criteria. Replace damaged cable immediately.

SPECIAL INSTRUCTIONS - EXTERNAL BRAKE RELEASE

Refer to the following instructions to release the winch brake and lower a load using an auxiliary hydraulic supply system and the optional External Brake Release Kit #220-091.

• DESCRIPTION OF EXTERNAL BRAKE RELEASE FUNCTION

The External Brake Release Kit is comprised of a Steel Ball #220-051 and an External Brake Release Fitting #220-050. These parts are positioned inside the external brake release port of the Motor Shaft End Cover.

The Steel Ball acts as a shuttle valve and prevents auxiliary hydraulic oil supplied at the External Brake Release Fitting from dumping to tank through the Motor. When auxiliary oil is supplied to the Brake Piston, pressure develops and partially releases the Brake. When the diminished brake can no longer hold the load, the Brake Discs slip and the load begins to lower.

Oil passes through the Brake Piston orifice and circulates through the Brake Discs to dissipate heat generated when slipping. This oil then passes through the Motor and back to tank.

⚠ WARNING

FAILURE TO VENT THE EXTERNAL BRAKE RELEASE FITTING TO TANK DURING NORMAL WINCH OPERATION COULD TRAP PRESSURE AT THE BRAKE PISTON AND ALLOW THE LOAD TO DROP, CAUSING PROPERTY DAMAGE, SEVERE INJURY OR DEATH. ENSURE THAT THE EXTERNAL BRAKE RELEASE FITTING IS VENTED TO TANK WHEN NOT IN USE.

• AUXILIARY HYDRAULIC SUPPLY SYSTEM

The auxiliary system must continuously supply at least 2 USGPM [7.5 L/min] at 1000 psi [70 bar] through a three way, two position, spring returned, control valve to the External Brake Release Fitting. The valve work port must be connected to tank in the neutral position. A very sensitive control valve is required to control the speed of the lowering load.

The auxiliary system can be permanently plumbed to the External Brake Release Fitting or connected as required. In either case, the Fitting must be vented to tank when not in use and never capped.

• INSTALLATION

When installed at the factory, the External Brake Release Fitting comes installed in the Motor Shaft End Cover port and protected by a Plastic Cap #220-092.

When installing the External Brake Release Kit into an existing winch, remove the Motor Shaft End Cover Plug #220-072 and insert the Steel Ball into the Motor Shaft End Cover external brake release port. Then install and tighten the External Brake Release Fitting.

• OPERATION

Supply oil through the auxiliary control valve to the External Brake Release Fitting. Increase the flow of oil to increase pressure and allow the load to drop faster. Return the valve to neutral to reduce the flow of oil and slow or stop the lowering load. A valve with very fine metering capability can be carefully modulated to allow some speed control.

Oil passing through the Brake Piston orifice removes heat from the Brake Discs and must be allowed to vent to tank through the Motor hoses.

IMPORTANT: CIRCULATION OIL MUST BE ALLOWED TO RETURN TO TANK THROUGH THE MOTOR HOSES. ENSURE THAT THE MOTOR PORTS ARE NOT PLUGGED WHEN SUPPLYING AUXILIARY OIL AT THE EXTERNAL BRAKE RELEASE FITTING.

6. MAINTENANCE

⚠ WARNING

FAILURE TO PROPERLY MAINTAIN AND SERVICE THE WINCH COULD RESULT IN A MAJOR MECHANICAL FAILURE AND ALLOW THE LOAD TO DROP, CAUSING PROPERTY DAMAGE, SEVERE INJURY OR DEATH. READ AND UNDERSTAND THE FOLLOWING INSTRUCTIONS BEFORE MAINTAINING THIS WINCH.

INTRODUCTION

Rotzler Titan winches are to be maintained by trained and authorized personnel who have read and understand the maintenance instructions in this manual. This manual is to be kept near the winch system and made accessible to the maintenance personnel.

Safe operation and optimum performance can only be assured when maintenance intervals are strictly followed. Be familiar and comply with all local rules and regulations governing the maintenance of hoisting equipment.

When maintaining the winch, ensure that the control system is deactivated and appropriate protective lock out devices are in place to prevent inadvertent winch start up during service.

CABLE MAINTENANCE

⚠ WARNING

CABLE WEARS OUT. FAILURE TO DETECT CABLE DAMAGE CAN LEAD TO UNEXPECTED CABLE FAILURE AND ALLOW THE LOAD TO DROP, CAUSING PROPERTY DAMAGE, SEVERE INJURY OR DEATH.

The cable is supplied independent of the winch and is not covered in this manual. Refer to manufacturer's recommendations for inspection and maintenance instructions.

Be familiar with and adhere to any local or national regulations governing the replacement of wire ropes used in hoisting operations.

- **REPLACING A DAMAGED CABLE**

Replace damaged cable as follows:

- Spool the cable off of the Drum until only the end secured in the Cable Wedge remains.
- Rotate the Drum until the Cable Wedge socket is easily accessible.
- Dislodge the Cable Wedge by pushing the cable rope into the Cable Wedge socket.
- Remove the Cable Wedge and pull the free end of the cable through the socket.
- Discard damaged cable and install new cable according to instructions in **CABLE SELECTION AND INSTALLATION.**

PREVENTIVE MAINTENANCE

Perform a basic inspection of the winch daily, monitoring for unusual noise or hydraulic leaks. Clean and check the cable for damage daily. Verify the tension of all mounting bolts weekly.

- **MAINTAINING GEARBOX LUBRICATING OIL**

Inspect the gearbox lubricating oil level through the Final Base Relief Valve port every two months. Maintain the oil level at the half-full point. Repeated loss of lubricating oil indicates a leak and should be investigated.

After the initial 100 hours of operation or two months, whichever comes first, drain the lubricating oil, flush the Cable Drum and add new oil. Subsequently, change the lubricating oil after every 1000 hours of operation or every two years, whichever comes first.

- **MAINTAINING HYDRAULIC SYSTEM FLUID**

Inspect and maintain the hydraulic system filter and other components according to the manufacturers' recommendations. Once a year, verify the condition of the hydraulic system fluid by having it analyzed for cleanliness, oxidation, color and viscosity. Increase this frequency in severe operating or environmental applications. Clean or replace fluid as required.

- **PERIODIC PERFORMANCE VERIFICATION**

Verify the performance of the winch every two months. In critical applications, this frequency should be increased. Major service problems are avoided by careful monitoring and early fault detection.

Hoist and lower a full test load at full hydraulic volume. Record the following measurements for evaluation and retain for future reference:

	NO LOAD		FULL LOAD	
	HOIST	LOWER	HOIST	LOWER
Pressure at motor port A				
Pressure at motor port B				
Cable Drum RPM				

Refer to **WINCH TROUBLE SHOOTING** if:

- o Winch does not smoothly hoist and lower the full test load.
- o Any abnormal noises are detected.
- o Test measurements vary from specifications listed in **PERFORMANCE DATA** or from previously recorded measurements
- o Motor does not develop at least 200 psi [14 bar] at the lowering port when lowering full test load at full hydraulic volume.
- o Any hydraulic fluid or gear box lubricating oil leaks are detected.

- **PERIODIC OVERHAUL AND INSPECTION**

A complete disassembly and internal inspection of the winch should be performed after every 1000 hours of operation or every two years, whichever comes first.

- o Remove winch to a clean, well lit shop area.
- o Disassemble, inspect and service winch as required according to **DISASSEMBLY INSTRUCTIONS**. Discard all O-Rings and Shaft Seals.
- o Thoroughly clean all components.
- o Assemble the winch according to **ASSEMBLY INSTRUCTIONS**, replacing all O-rings and Shaft Seals.
- o Remount and test the winch according to **INSTALLATION INSTRUCTIONS**.

HYDRAULIC SYSTEM TROUBLE SHOOTING

Before trouble shooting an apparent winch fault, ensure that the hydraulic system is delivering the specified hydraulic pressure and volume. Hydraulic system problems are frequently incorrectly diagnosed as winch problems.

An in-line flow meter installed immediately at the winch can be used to confirm adequate hydraulic system supply volume through the winch motor. A faulty hydraulic system pump, relief valve or control valve could divert the hydraulic supply and reduce the winch speed.

Pressure gauges installed immediately at the winch motor ports can be used to confirm adequate hydraulic system supply pressure. A faulty hydraulic system pump, relief valve or control valve could reduce the hydraulic supply pressure and diminish the winch pulling capacity.

If the fault persists and the hydraulic system performance has been verified, refer to **WINCH TROUBLE SHOOTING**.

WINCH TROUBLE SHOOTING

SYMPTOM	POSSIBLE CAUSE	CORRECTIVE ACTION
1. Winch will not hoist/pull rated load.	a) Inadequate hydraulic system supply pressure.	a) Install gauges at motor ports to verify hydraulic system supply pressure and correct as required.
	b) Damaged winch motor.	b) Replace or repair winch motor.
	c) Winch centerline is distorted due to uneven mounting surface.	c) Refer to **INSTALLATION INSTRUCTIONS** for proper winch mounting.
	d) Binding load carrying sheaves.	d) Inspect and repair or lubricate sheaves as required.
2. Winch will not turn at rated speed.	a) Inadequate hydraulic system supply volume.	a) Use an in-line flow meter at the motor to verify hydraulic system supply volume and correct as required.
	b) Damaged winch Motor.	b) Replace or repair winch Motor.
	c) Winch centerline is distorted due to uneven mounting surface.	c) Refer to **INSTALLATION INSTRUCTIONS** for proper winch mounting.
	d) Binding load carrying sheaves.	d) Inspect and repair or lubricate sheaves as required.
3. Winch will not hold the load.	a) Wire rope is wound onto the cable drum in the wrong direction.	a) Install wire rope according to **INSTALLATION INSTRUCTIONS**.
	b) Hydraulic system is trapping pressure at external brake release port.	b) Vent the external brake release port to tank when in neutral.
	c) Hydraulic system control valve is equipped with the wrong spool and traps pressure at the motor lowering port when returned to the neutral position.	c) Install a control valve spool that connects both work ports to tank in the neutral position.
	d) Clutch assembly is damaged.	d) Disassemble and inspect the Sprag Clutch, Brake Shaft and Brake Hub according to **SERVICE INSTRUCTIONS**. Replace worn or damaged components.
	e) Brake Friction or Separator Plates are worn or damaged.	e) Disassemble and inspect the Brake Discs and Brake Separators according to **SERVICE INSTRUCTIONS**. Replace as required.
	f) Hydraulic fluid contamination is causing Brake Piston to bind in Primary Base.	f) Disassemble and inspect the bore of the Primary Base for contamination or abrasion damage according to **SERVICE INSTRUCTIONS**. Repair or replace as required.

WINCH TROUBLE SHOOTING (continued)

SYMPTOM	POSSIBLE CAUSE	CORRECTIVE ACTION
4. Winch will not turn in the lowering direction.	a) Inadequate hydraulic system supply pressure.	a) Install gauges at motor ports to verify hydraulic system supply pressure. Correct as required.
	b) Brake release pressure does not develop at Brake Piston due to damaged O-Rings.	b) Disassemble and inspect Brake Piston and Brake Conduit O-Rings according to **SERVICE INSTRUCTIONS**. Replace as required.
	c) Brake release pressure is prevented from reaching Brake Piston due to blocked Brake Conduit.	c) Disassemble and inspect Brake Conduit center bore is clear according to **SERVICE INSTRUCTIONS**. Repair as required.
	d) Damaged winch Motor.	d) Replace or repair winch Motor.
	e) Winch centerline is distorted due to uneven mounting surface.	e) Refer to **INSTALLATION INSTRUCTIONS** for proper winch mounting
5. Winch vibrates when lowering the load.	a) Inadequate hydraulic system supply volume.	a) Use an in-line flow meter at the motor port to verify hydraulic system supply volume is greater than the minimum volume specified in **PERFORMANCE DATA**. Correct as required.
	b) Air in hydraulic fluid.	b) Ensure that the hydraulic fluid is clear. If appearance is milky or cloudy, air is being introduced into the hydraulic system. Diagnose and correct as required.
	c) Cooling oil supply to Brake Discs is blocked by a plugged Brake Piston orifice.	c) Remove Brake Piston and inspect orifice according to **SERVICE INSTRUCTIONS**. Clear if plugged.
	d) Brake Discs or Separators are damaged or worn.	d) Disassemble and inspect the Brake Discs and Separators according to **SERVICE INSTRUCTIONS**. Replace as required.
	e) Clutch assembly is damaged.	e) Disassemble and inspect the Sprag Clutch, Brake Shaft and Brake Hub according to **SERVICE INSTRUCTIONS**. Replace worn or damaged components.

WINCH TROUBLE SHOOTING (continued)

SYMPTOM	POSSIBLE CAUSE	CORRECTIVE ACTION
6. Winch leaks oil.	a) Hydraulic fluid leaks from between the Motor Shaft End Cover and the Primary Base due to a damaged O-ring.	a) Disassemble and inspect the Motor Shaft End Cover O-ring and sealing surfaces according to **SERVICE INSTRUCTIONS**. Replace or repair as required.
	b) Hydraulic fluid leaks from the Motor Gear Housing due to damaged Motor Housing Seal.	b) Disassemble and inspect the Motor Shaft Seals and sealing surfaces according to **SERVICE INSTRUCTIONS**. Replace or repair as required.
	c) Gear lubricating oil leaks from between the Final Base and Cable Drum flange due to a damaged final end Cable Drum Seal.	c) Disassemble and inspect the final end Cable Drum Seal according to **SERVICE INSTRUCTIONS**. Ensure that the sealing surface of the Seal Sleeve is smooth and that the Seal Sleeve connection to the Final Base is intact. Replace seal and repair sealing surface or connection as required.
	d) Gear lubricating oil leaks from the Final Base Relief Valve due to one of the following faults: I) Relief Valve is damaged or blocked open. II) The Brake Shaft Seal is leaking hydraulic fluid into the Cable Drum and relieving through the Relief Valve. Inspect both areas between the Cable Drum flanges and Bases for oil leakage resulting from damaged Cable Drum Seals.	d) I) Remove and inspect Relief Valve. Clear any contamination or replace Valve as required. II) The Cable Drum cavity fills with hydraulic system fluid if the Brake Shaft Seal has failed. If this occurs, disassemble and inspect the Brake Shaft Seal according to **SERVICE INSTRUCTIONS**. Replace as required. If damaged, replace Cable Drum Seals also.
	e) Gear lubricating oil leaks from between the Primary Base and Cable Drum flange due to a damaged primary end Cable Drum Seal or Bearing Holder O-ring.	e) Disassemble and inspect the primary end Cable Drum Seal and Bearing Holder O-ring according to **SERVICE INSTRUCTIONS**. Inspect the corresponding sealing surfaces. Ensure that the Seal Sleeve connection to the Primary Base is intact. Replace seal, repair sealing surface or connection as required.

GENERAL SERVICE INSTRUCTIONS

• INTRODUCTION

Rotzler Titan winches are designed for easy field repair. If a fault is isolated to one of the three major assemblies, that assembly can be immediately replaced in its entirety and the failed assembly repaired when time permits or returned for factory service.

Perform service of internal components in a clean, well lit, shop area. Discard all O-Rings and Shaft Seals when servicing the winch. Do not attempt to re-use seals.

• SERVICING CRITICAL COMPONENTS

Due to their important function, several internal components are identified as CRITICAL COMPONENTS. CRITICAL COMPONENTS are tracked by the winch Serial Number located on the Final Base Identification Label.

Return Fax forms are provided when CRITICAL COMPONENTS are supplied as spare parts. Return this form to Rotzler Inc. when a CRITICAL COMPONENT is replaced and the manufacturing records for that winch Serial Number will be updated and the component history maintained. This service is offered to protect the end user and participation is left to the discretion of the end user.

• SERVICE RECORDS

Maintain a winch Service Log, identifying Serial Number, service performed, preventive maintenance and service dates.

• ADHESIVE PROCEDURE

Adhesive technology is used throughout Titan winches to structurally secure fasteners and other components. Cleanliness is critical for the successful application of adhesives. Oily contamination from a dirty work area, tools or hands will reduce the strength of adhesive bonds.

SECURING FASTENERS WITH ADHESIVES

1. Use Loctite #262 Threadlocker to secure fasteners.
2. Ensure that fasteners and threaded holes are clean and dry.
3. Apply a bead of Threadlocker axially along the bottom portion of the screw thread that will engage the female thread. Use a single bead approximately 1/8-3/16" [3-5mm] in diameter, depending on screw size.
4. Initially, install screws only finger tight. When a tightening sequence is required, the specified tightening order assumes that the screws are numbered in sequence around the bolt pattern. Screws are then tightened according to the defined order.
5. Wipe away excess Threadlocker.
6. Allow 24 hours for adhesive to cure before applying full service load.
7. Although considered to be a permanent bond, screws can be readily removed using normal hand tools.

SECURING BEARINGS WITH ADHESIVES

1. Use Loctite #648 Retaining Compound to secure bearings as required.
2. Ensure that the bearing and the machined bore are clean and dry.
3. Apply a single bead of Retaining Compound approximately 1/8" [3mm] in diameter around the inside perimeter of the bearing bore. Locate this bead at approximately the same distance from the bottom step as the bearing width.
4. Push bearing into bore until it rests against stop.
5. Wipe away excess compound.
6. Allow 24 hours for adhesive to cure before applying full service load.
7. Although considered to be a permanent bond, bearings can be removed using normal hand tools.

SERVICE INSTRUCTIONS

REFER TO ROTZLER INC. FOR:

- DISASSEMBLY INSTRUCTIONS
- ASSEMBLY INSTRUCTIONS
- SPECIAL INSTRUCTIONS – REVERSING DIRECTION OF ROTATION

SPECIAL INSTRUCTIONS - STAINLESS STEEL SCREWS

- **GENERAL INFORMATION**

Standard Rotzler Titan TC series winches are equipped with plated alloy steel screws. Stainless steel screws are optionally available for use in highly corrosive environments. The stainless screw option consists of replacement Stainless Steel Screws for the winch as indicated in the **ASSEMBLY DRAWINGS.** Stainless steel screws are identified with "A4" on the head of the screw.

7. ORDERING

TECHNICAL INFORMATION

An Identification Label is located on the outside of the Final Base and identifies the winch model and serial numbers. Record the numbers below and retain for future reference:

MODEL: _____
SERIAL NUMBER: _____

The Identification Label must not be removed, altered or have its technical data obscured. If the data becomes difficult to read, contact Rotzler Inc. for a replacement Label.

SEAL AND SERVICE KITS

It is recommended that Winch and Motor Seal (or Service) Kits be available before beginning service as follows:

- **#22C-093 TC2 WINCH SEAL KIT** (contains seals as indicated in **ASSEMBLY DRAWINGS**)
- **#22C-086 TC2 WINCH SERVICE KIT** (contains Loctite adhesives in addition to the seals contained in the Seal Kit)
- **#22C-094K 511 MOTOR SEAL KIT** (contains seals as indicated in **MOTOR ASSEMBLY DRAWINGS**)
- **#22C-080K 511 MOTOR SERVICE KIT** (contains Loctite adhesives in addition to the seals contained in the Seal Kit)

ORDERING REPLACEMENT COMPONENTS

When ordering replacement components for the winch or when making technical inquiries, refer to the Model and Serial Number listed on the winch Identification Label.

The winch model number does not distinguish what types of screws are installed on the winch. When ordering parts, it is therefore important to specify what type of screws is required.

WINCH DRAWING

#EW.TC2 REV C

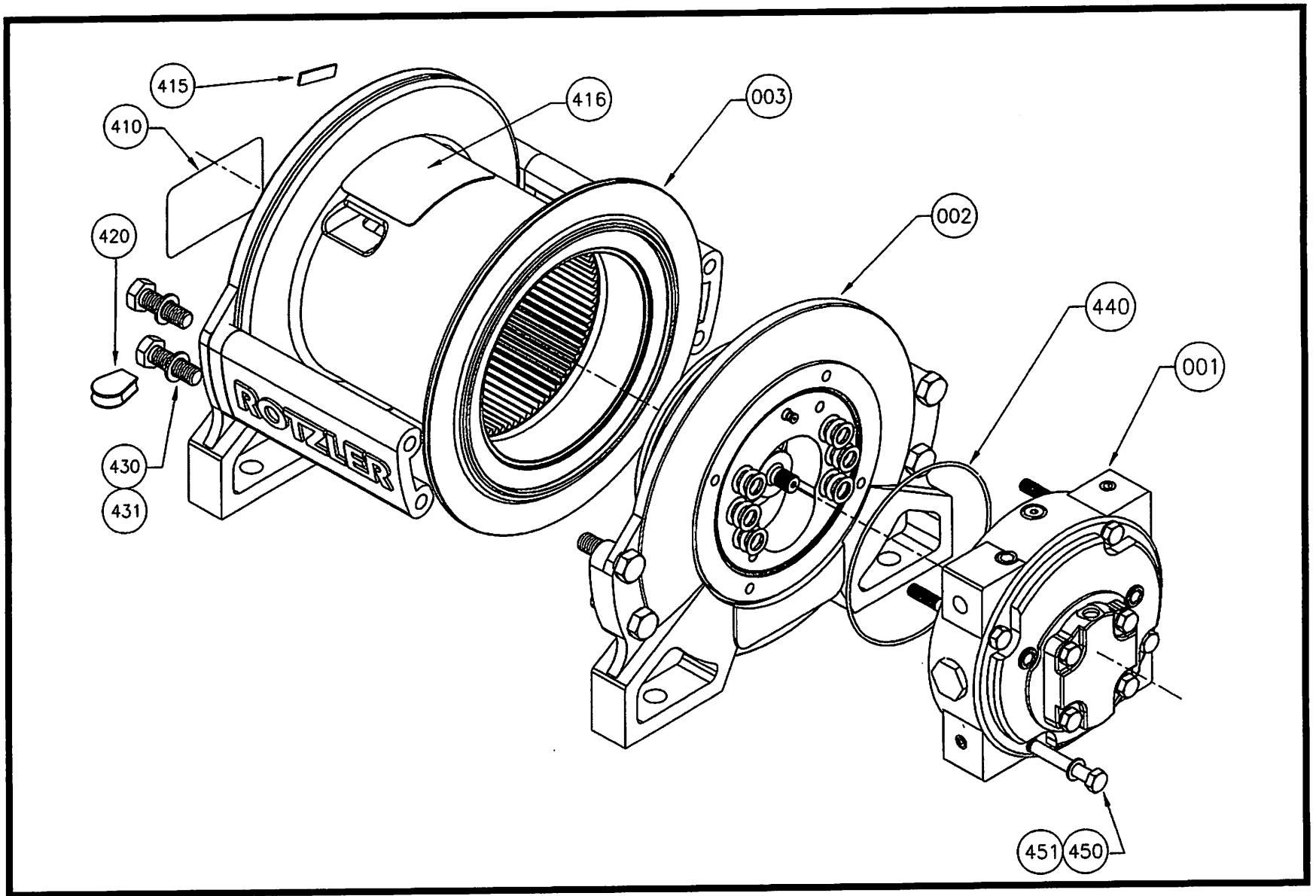

WINCH COMPONENT LIST

#EW.TC2 REV C

REF.	COMPONENT	QTY.	DESCRIPTION	
001	See Table 1	1	Assembly, Motor, M11C	
002	See Table 1	1	Assembly, Primary, TC2	
003	F.TC2	1	Assembly, Final, TC2	
004	H.TC2	1	Assembly, Hardware, TC2. Includes:	
410	220-065	1	Label, Identification	
415	220-077	1	Label, Number	STAINLESS STEEL SCREW OPTION
416	See Table 1	1	Label, Rotation	
420	220-067	1	Cable Wedge, .44"	
430	220-062	8	Screw, Hex Head Cap, M14-2.00x40mm, DIN 933, Gr.8.8, Plated	220-098
431	220-022	8	Washer, M14, DIN 433, Plated	220-099
* 440	22C-044	1	Seal, O-Ring, #2-162	
450	See Table 1	4	Screw, Hex-Head Cap, M10-1.50, DIN 931, Gr.8.8, Plated	See Table 1
451	220-029	4	Washer, M10, DIN 433, Plated	220-101

* TC2 Winch Seal Kit #22C-093, includes item #440.

TABLE 1

VARIANCE	REF 001	REF 002	REF 416	REF 450	REF 450-SS
Counter clockwise hoisting, -31 motor	M.TC2.CC.31.0	P.TC2.CC	220-078 CC	22C-028 65mm	22C-102
Clockwise hoisting, -31 motor	M.TC2.CW.31.0	P.TC2.CW	220-079 CW	22C-028 65mm	22C-102
Counter clockwise hoisting, -16 motor	M.TC2.CC.16.0	P.TC2.CC	220-078 CC	21C-028 50mm	21C-102
Clockwise hoisting, -16 motor	M.TC2.CW.16.0	P.TC2.CW	220-079 CW	21C-028 50mm	21C-102

NOTE: The winch model number is located on the Identification Label #410 and identifies rotation code (CC, CW) and motor code.

Weight =

511-31 STANDARD MOTOR ASSEMBLY DRAWING

#EM.TC2.**.31.* REV E

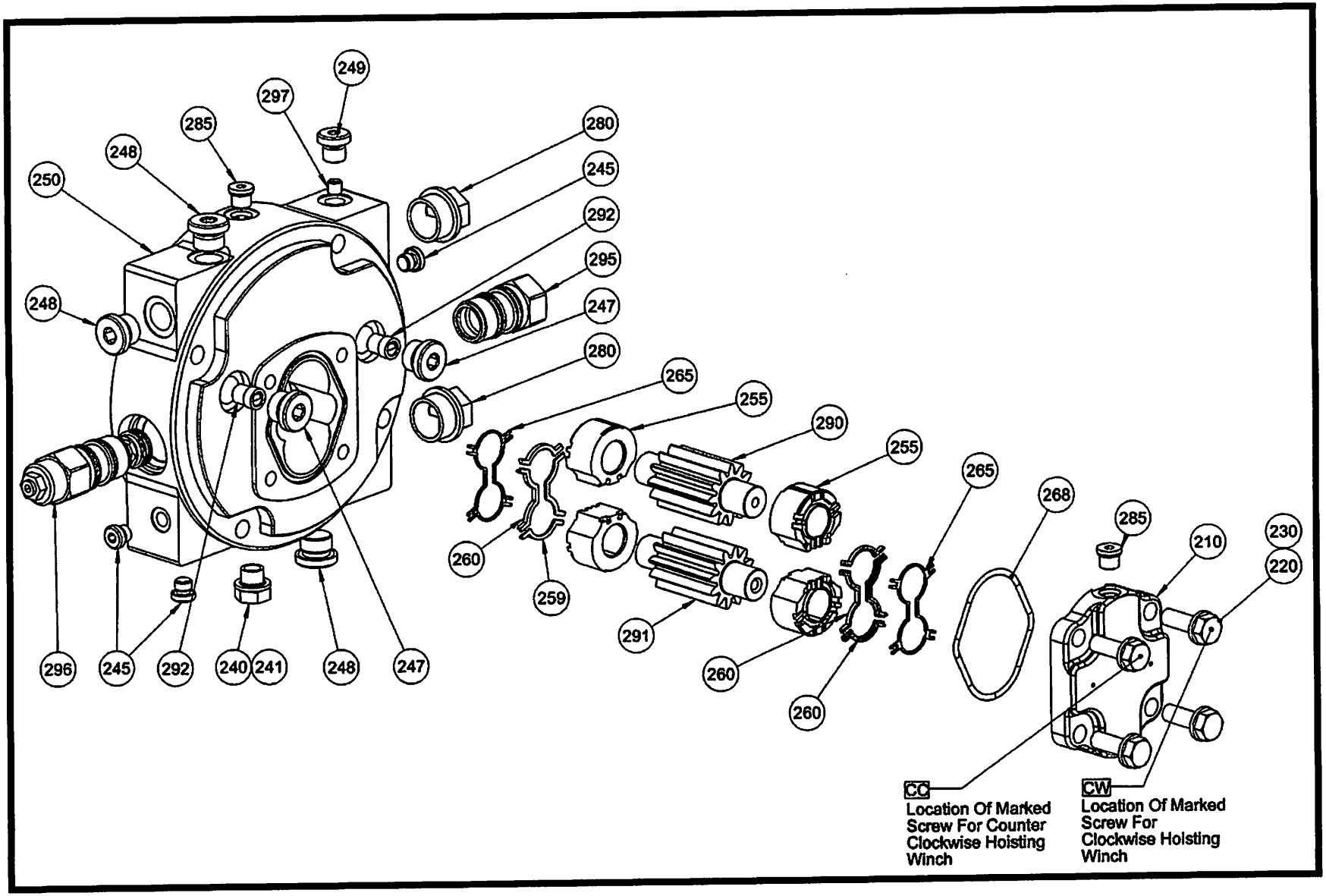

511-31 STANDARD MOTOR COMPONENT LIST

#EM.TC2.**.31.* REV E

M11C-31 MOTOR ASSEMBLY			Weight: 15.2lbs
REF	COMPONENT	QTY	Description
210	22C-019	1	Motor Cover, Port End, M11C
220	210-062	4	Screw, Hex Hd Cap, M10-1.50x30mm, Steel, Gr.8.8, Plated, DIN 933
230	4000000707	4	Washer, M10, Steel, Plated, DIN 433, PH #391 3782 245
240	22C-166	1	Fitting, Plug, BSPP-1/4
241	22C-167	1	Fitting, Seal Ring, BSPP-1/4
245	22C-153	3	Fitting, Plug, Metric, M10x1.0, E Seal, Adaptall # 9029-10x1.0
247	22C-152	2	Fitting, Plug, Metric, M18x1.5, E Seal, Adaptall # 9029-18x1.5
248	22C-152	3	Fitting, Plug, Metric, M18x1.5, E Seal, Adaptall # 9029-18x1.5
249	22C-151	1	Fitting, Plug, BSPP, G1/4, E Seal, Adaptall # 9028-04
250	9272180001	1	Motor Housing, M/C, TC2, 511C-31R
* 255	220-020K	4	Motor Bushing, Thrustblock, 511, PH #8301 207 00L
* 259	220-052K	4	Motor Seal, Channel, Top, 511, PH #8301 016 0B9
* 260	220-053K	4	Motor Seal, Channel, Side, 511, PH #8301 016 0AB
* 265	220-055K	2	Motor Seal, Backup, 511, PH #8301 015 006
* 268	220-056K	1	Motor Seal, Section, 511, PH #9313 145 00B
280	22C-071	2	Fitting, Plug, Plastic, BSPP-3/4, Niagara #BT-0750
285	220-072	2	Fitting, Plug, SAE #4, Airway #6409-4
290	22C-021KA	1	Motor Gear, Drive, 511C-31, PH #334 2631 000
291	22C-021KB	1	Motor Gear, Driven, 511C-31, PH #334 2731 000
292	230-126	2	Valve, Check, M330, PH #391 3681 001
295	See Table 1	1	Depends on Variance
296	See Table 1	1	Depends on Variance
297	See Table 1	1	Depends on Variance

* 511C Motor Seal Kit #22C-094K includes #255, #259, #260, #265, and #268

TABLE 1

VARIANCE	MOTOR	REF 295	REF 296	REF 297
Counter clockwise hoisting	M.TC2CC310	22C-164	22C-161	013 111 0000
Clockwise hoisting	M.TC2CW310	22C-161	22C-161	Not required
Counter CW hoisting, CB Valve	M.TC2CC31V	22C-164	22C-160	013 111 0000
Clockwise hoisting, CB Valve	M.TC2CW31V	22C-160	22C-161	Not required

22C-160	Valve, Counterbalance, Sun #CBDL-LJN
22C-161	Fitting, Plug, T-2A Cavity, Sun #XBOA-XXN
22C-164	Fitting, Plug, T-2A Cav, Mod
013 111 0000	Fitting, Plug,Metric, M8x1.00, Taper Pipe, DIN906

PRIMARY ASSEMBLY DRAWING

#EP.TC2 REV C

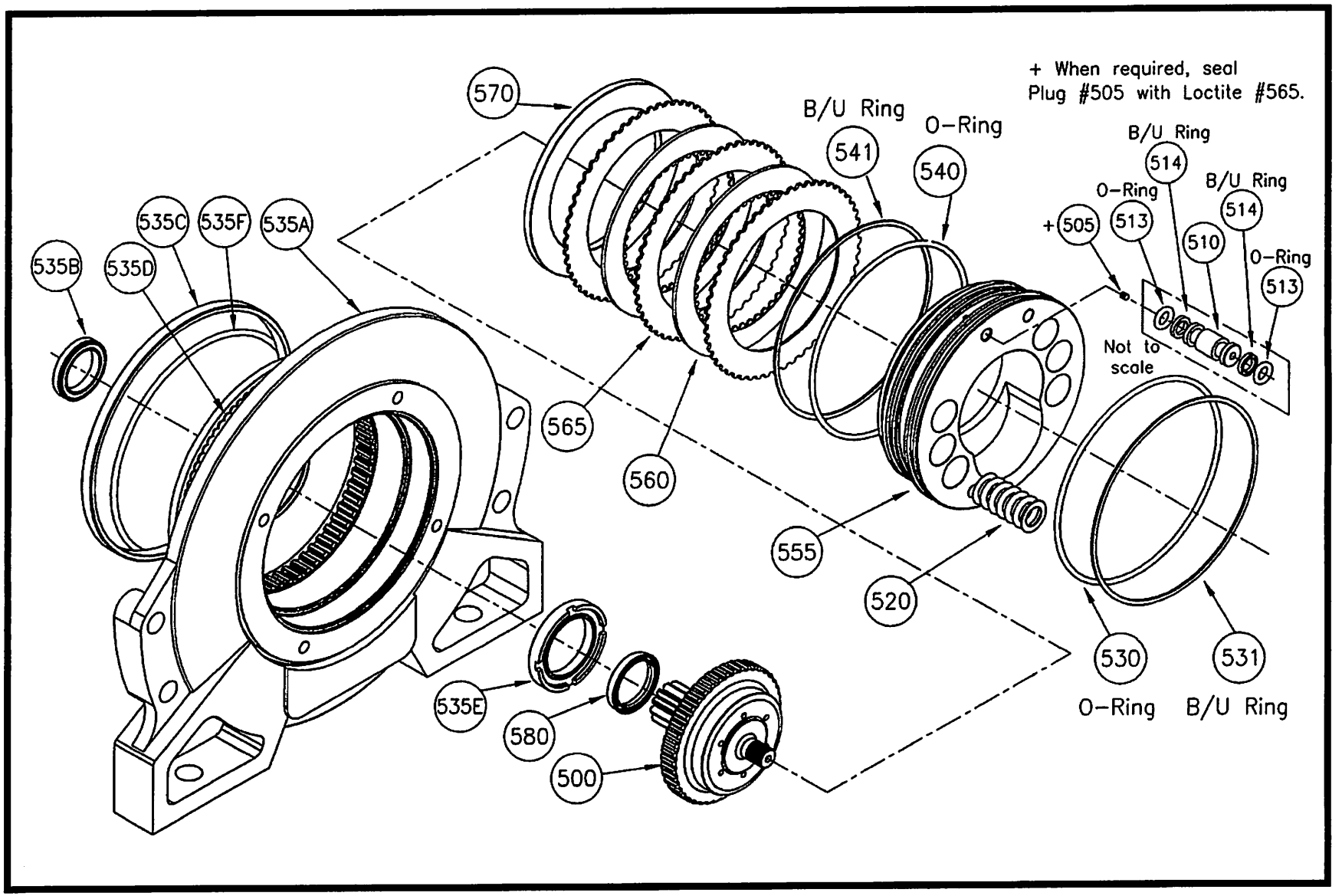

PRIMARY COMPONENT LIST

#EP.TC2 REV C

	REF.	COMPONENT	QTY	DESCRIPTION
	500	See table 1	1	Assembly, Clutch, TC2
	505	See table 1	1	Depends on variance.
	510	220-045	1	Brake Conduit
*	513	220-047	2	Seal, O-Ring, #2-008
*	514	220-048	2	Seal, Backup Ring, #8-008
	520A	21C-016	6	Outer Spring, .148 x .863
	520B	22C-126	6	Inner Spring, .105 x .527
*	530	22C-043	1	Seal, O-Ring, #2-254
*	531	22C-042	1	Seal, Backup Ring, #8-254
	535	22C-076	1	Base, Primary, Assembled, TC2. Includes:
	535A	22C-PP2	1	Base, Primary, TC2PP
	535B	22C-066	1	Bearing, Ball, #16006
	535C	22C-058	1	Sleeve, Rotary Shaft Seal, TC2
	535D	22C-059	1	Bearing, KMF #KKS 1309
	535E	22C-082	1	Base, Primary, Insert, TC2
	535F	220-064	1	Seal, O-Ring, #2-165
*	540	22C-041	1	Seal, O-Ring, #2-252
*	541	22C-040	1	Seal, Backup Ring, #8-252
	555	22C-011	1	Brake Piston, TC2
	560	220-039	2	Brake Disc, TH2
	565	220-038	3	Brake Separator, TH2
	570	220-015	1	Brake Locator, TH2
*	580	220-035	1	Seal, Brake Shaft, TH2

Weight = 33.0#

When Primary Assembly is sold separately, package with:
- #800-008 Shipping Plate
- #220-173 (x3) M10x20mm Screws
- #220-068 (x2) M10 Washers

(Brake Shaft is secured with x1 Screw installed with Loctite #262)

TC2 Winch Seal Kit #22C-093 includes #513 (x2), #514 (x2), #530, #531, #540, #541 and # 580.

TABLE 1

VARIANCE	ASSEMBLY	REF 500	REF 505
Counter clockwise hoisting	P.TC2.CC.0	C.TC2.CC	Not required.
Clockwise hoisting	P.TC2.CW.0	C.TC2.CW	Not required.
Counter clockwise hoisting, with CB valve	P.TC2.CC.V	C.TC2.CC	22C-165 Plug +
Clockwise hoisting, with CB valve	P.TC2.CW.V	C.TC2.CW	22C-165 Plug +

CLUTCH ASSEMBLY DRAWING

#EC.TC2 REV B

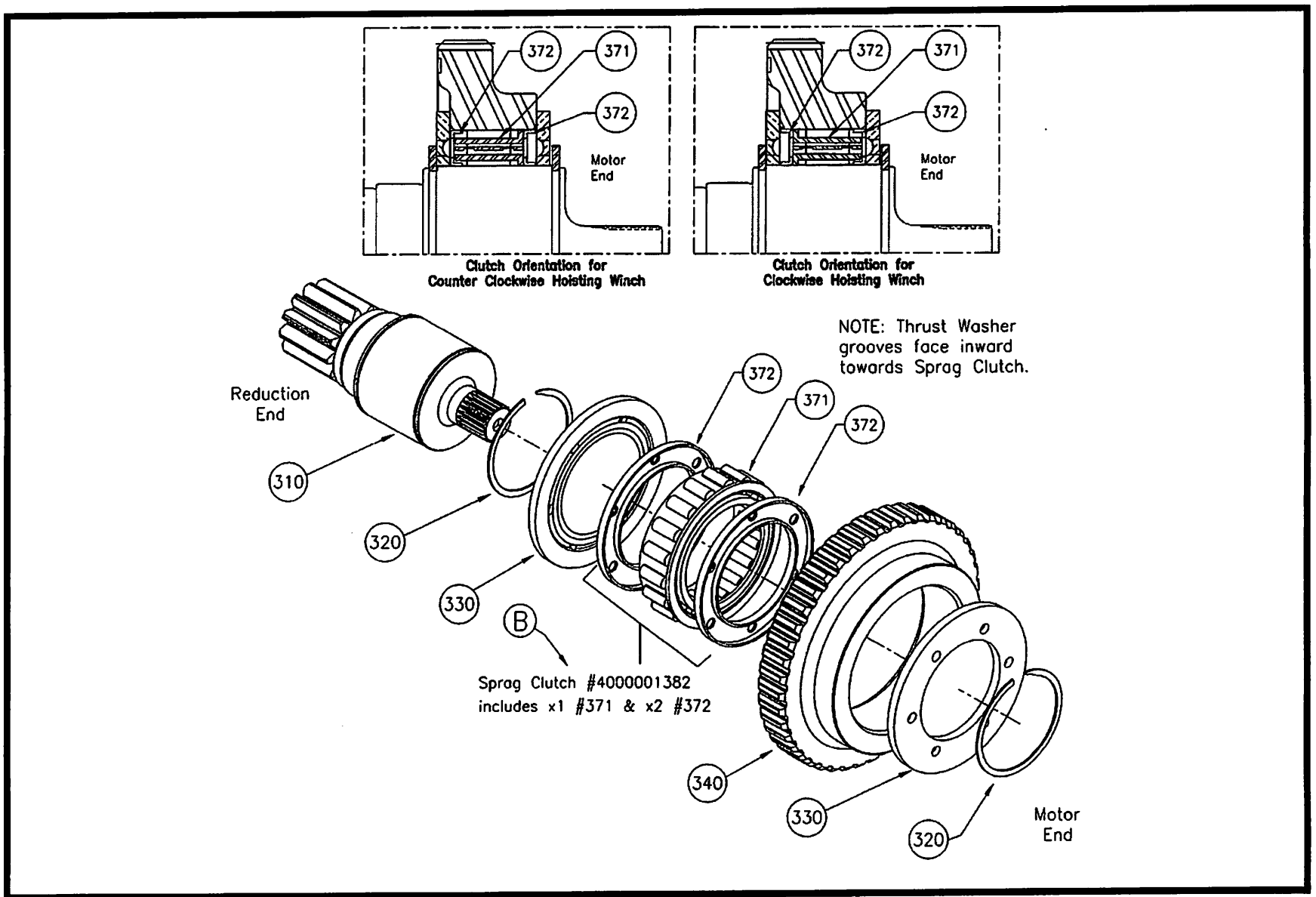

CLUTCH COMPONENT LIST

#EC.TC2 REV B

	REF.	COMPONENT	QTY.	DESCRIPTION
⊕	310	22C-014	1	Brake Shaft, TC2
	320	4000000708	2	Retainer, Spiralox #US-150
	330	4000000709	2	Brake Clutch Thrust Washer
⊕	340	220-010	1	Brake Hub, 0.91"
⊕	371	4000000711	1	Brake Sprag Clutch Cage
	372	4000000712	2	Brake Sprag Clutch End Bearing

⊕ Refer to SERVICING CRITICAL COMPONENTS for special instructions.

FINAL ASSEMBLY DRAWING

#EF.TC2 REV C

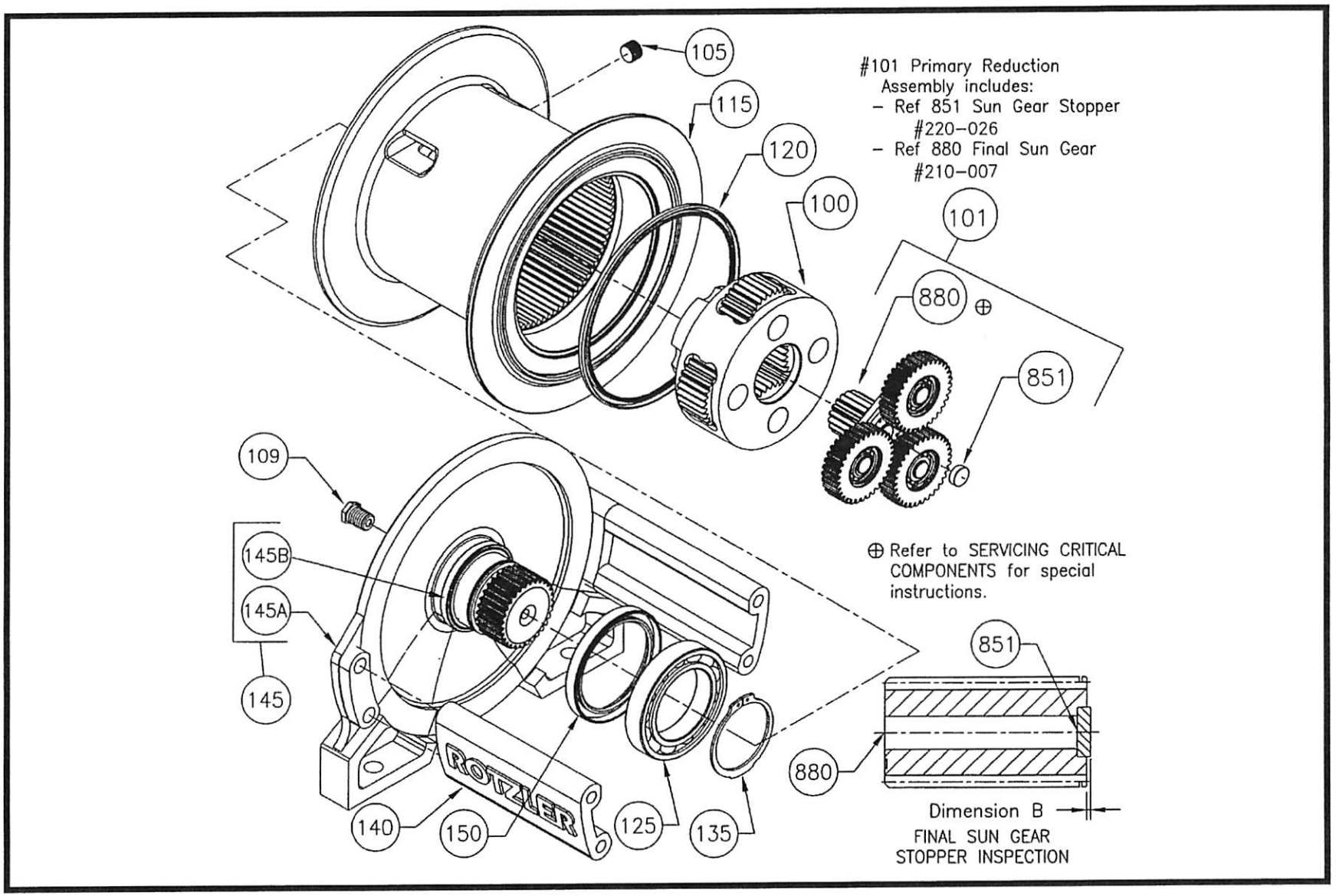

FINAL ASSEMBLY COMPONENT LIST

#EF.TC2 REV C

	REF	COMPONENT	QTY	DESCRIPTION
	100	RF.TC2	1	Assembly, Reduction, Final, TC2
	101	RP.TC2	1	Assembly, Reduction, Primary, TC2
	105	220-134	1	Fitting, Plug, Pipe, 3/8, SS 316, Seaway #D432
	109	220-063	1	Valve, Relief
	115	22C-013	1	Cable Drum, TC2
*	120	22C-060	1	Seal, Rotary Shaft,DIN 3760,WA Style, 200X180X7mm
	125	220-059	1	Bearing, Ball, SKF #6014
	135	22C-031	1	Retainer, DIN 471, American Ring #471-0700
	140	220-030	2	Spacer Bar, TH2
	145	220-074	1	Base, Final, Assembled, TH2. Includes:
	145A	220-001	1	Base, Final, TH2
	145B	220-058	1	Sleeve, Rotary Shaft Seal, TH2
*	150	220-060	1	Seal, Rotary Shaft, DIN3760, WA Style, 85X110X12mm

* TC2 Winch Seal Kit #22C-093 includes item #120 and #150.

ROTZLER TITAN®

ROTZLER INC.
Unit 122, 7350 – 72 Street
Delta, British Columbia, Canada V4G 1H9
PH: (604) 940-7134 • FX: (604) 940-7135
Website: www.rotzler.com
Email: rotzlercanada@rotzler.de

PRINTED IN CANADA

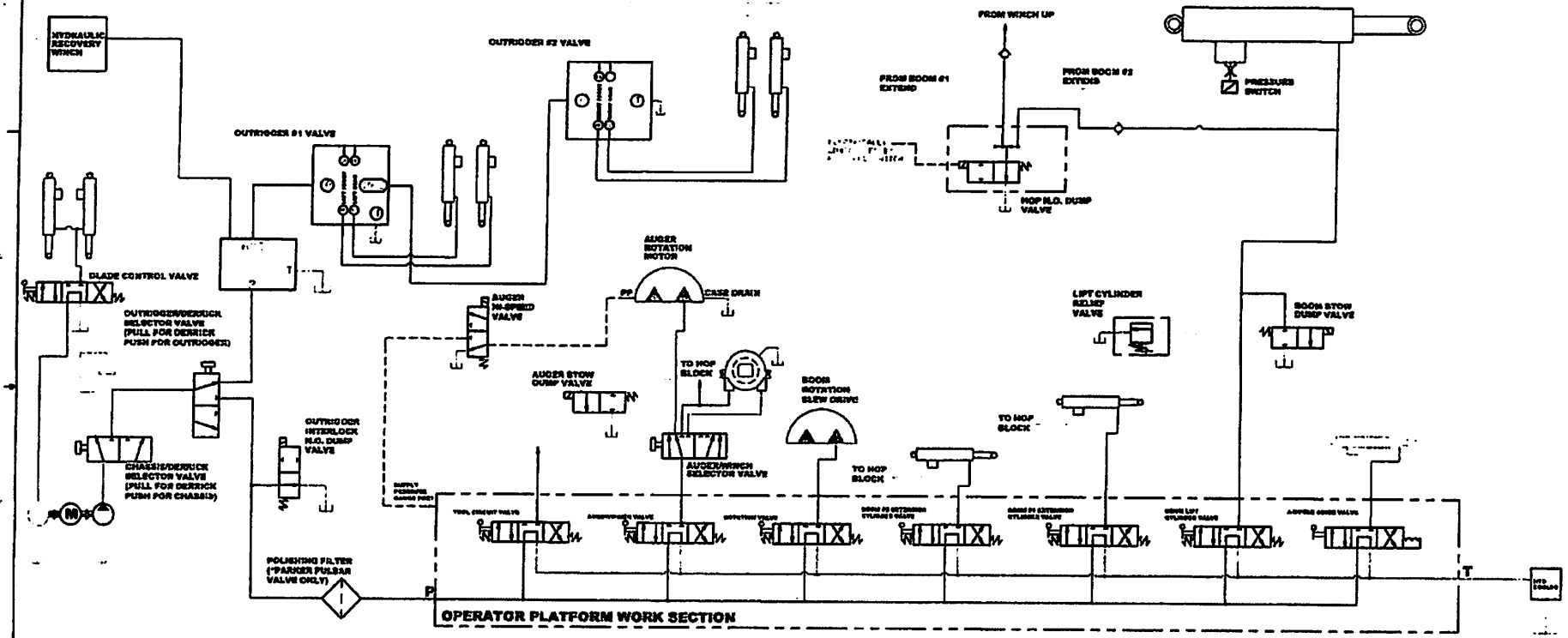

ALL TANK LINES RETURN TO TANK THRU FILTER

NOTES:

VALVE INLET PRESSURE RELIEF SETTING- 2900PSI
- -OUTRIGGER CONTROL VALVE
- -BOOM CONTROL VALVE

WORK SECTION RELIEF SETTING
- -BOOM ROTATION- 1600 PSI
- -TOOL CIRCUIT- 2000PSI

HYDRAULIC OIL - APPROX 23GALLONS

USED ON: PATRIOT

THE INFORMATION CONTAINED IN THIS DRAWING IS THE SOLE PROPERTY OF SKYLIFT, INC.
ANY REPRODUCTION IN PART OR AS A WHOLE WITHOUT THE WRITTEN PERMISSION OF SKYLIFT, INC. IS PROHIBITED.

SKYLIFT

TITLE: PATRIOT HYDRAULIC SCHEMATIC ELECTRIC HOP

SIZE	DWG. NO.	REV
B	2001-HYD	A

STANDARD

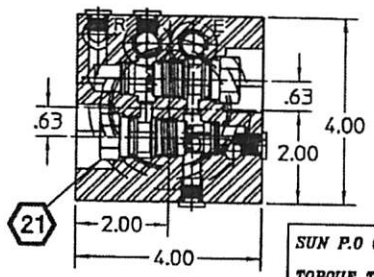

STAMP "E" & "R" AS SHOWN.

SUN P.O CHECK VALVE CKCB-XCN
TORQUE TO 30-40 FT.LBS.
(EXTEND AND RETRACT)

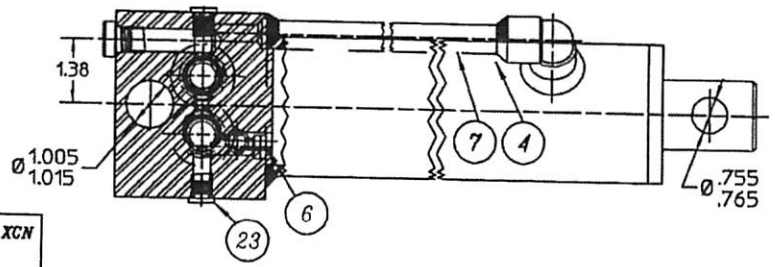

HALF SCALE

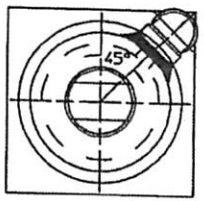

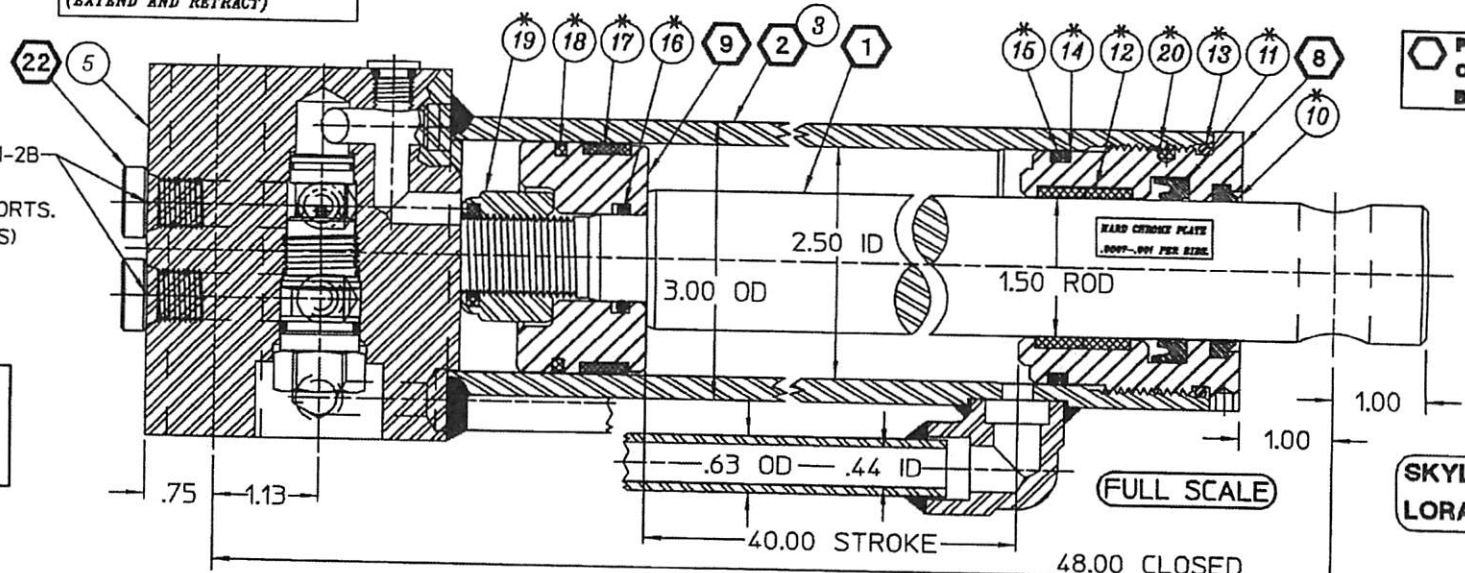

PARTS MARKED OAN BE PURCHASED BY CUSTOMER.

This drawing is confidentia
and shall not be copied o
disclosed to anyone excep
by written consent of V&P
Hydraulic Products.
Signed:
Dated:

FULL SCALE

SKYLIFT
LORAIN, OHIO

FINAL DRAWING.

0.	PART NO.	QUAN.	DESCRIPTION
2	059-26916	1	WEAR RING
1	044-32263	1	ROD SEAL
0	055-36382	1	ROD WIPER
?	506-252681B	1	PISTON
3	502-252677B	1	PACK HEAD
7	519-255094A	1	OIL LINE
6	545-85157	1	WELD PLUG
5	523-253598C	1	VALVE END COVER
4	534-13038A	1	ELBOW
3	505-255080B	1	CYLINDER WALL
2	524-255099B	1	WALL ASSEMBLY
	501-255076B	1	PISTON ROD

NO.	PART NO.	QUAN.	DESCRIPTION
23	03224-61672	4	STEEL PLUG
22	03213-300392	2	PLASTIC PLUG
21	057-401182	2	P.O. CHECK VALVE
20	546-41983	1	LOCK
19	034-22546	1	LOCK NUT
18	04356-250866	1	PISTON SEAL
17	059-26063	1	WEAR RING
16	036-22541	1	O-RING
15	036-02019	1	O-RING
14	028-75304	1	BACK-UP RING
13	036-105016	1	O-RING

QUAN	PART NO.	DESCRIPTION
1	546-41983	LOCK
1	034-22546	LOCK NUT
1	04356-250866	PISTON SEAL
1	059-26063	WEAR RING
1	036-22541	O-RING
1	036-02019	O-RING
1	028-75304	BACK-UP RING
1	036-105016	O-RING
1	059-26916	WEAR RING
1	044-32263	ROD SEAL
1	055-36382	ROD WIPER
*	549-252675	SEAL KIT

ENGINEERING DATA:
EFFECTIVE AREA EXTEND 4.91 SQ.IN.
EFFECTIVE EXTEND FORCE AT:
2000 PSI OPERATING PRESSURE 9,816 LBS.
2000 PSI SYSTEM RELIEF PRESSURE 9,816 LBS.
EFFECTIVE AREA RETRACT 3.14 SQ.IN.
EFFECTIVE RETRACT FORCE AT:
2000 PSI OPERATING PRESSURE 6,282 LBS.
2000 PSI SYSTEM RELIEF PRESSURE 6,282 LBS.
DISPLACEMENT IN EXTEND 0.92 GAL.
DISPLACEMENT IN RETRACT 0.60 GAL.
TEST PRESSURE 2500 PSI

ANGLES ±2°
2 PLACE DEC. ±.02
3 PLACE DEC. ±.002

Int.	No.	Change Date

500-255075

OUTRIGGER JACK CYLINDER

2.50 DIA.X 40.00 STROKE
D/A HYDRAULIC CYLINDER

DRAWN BY
SCHLANGER

SCALE
NOTED

DATE
01/16/09

V & P HYDRAULIC PRODUCT
DELAWARE OHIO

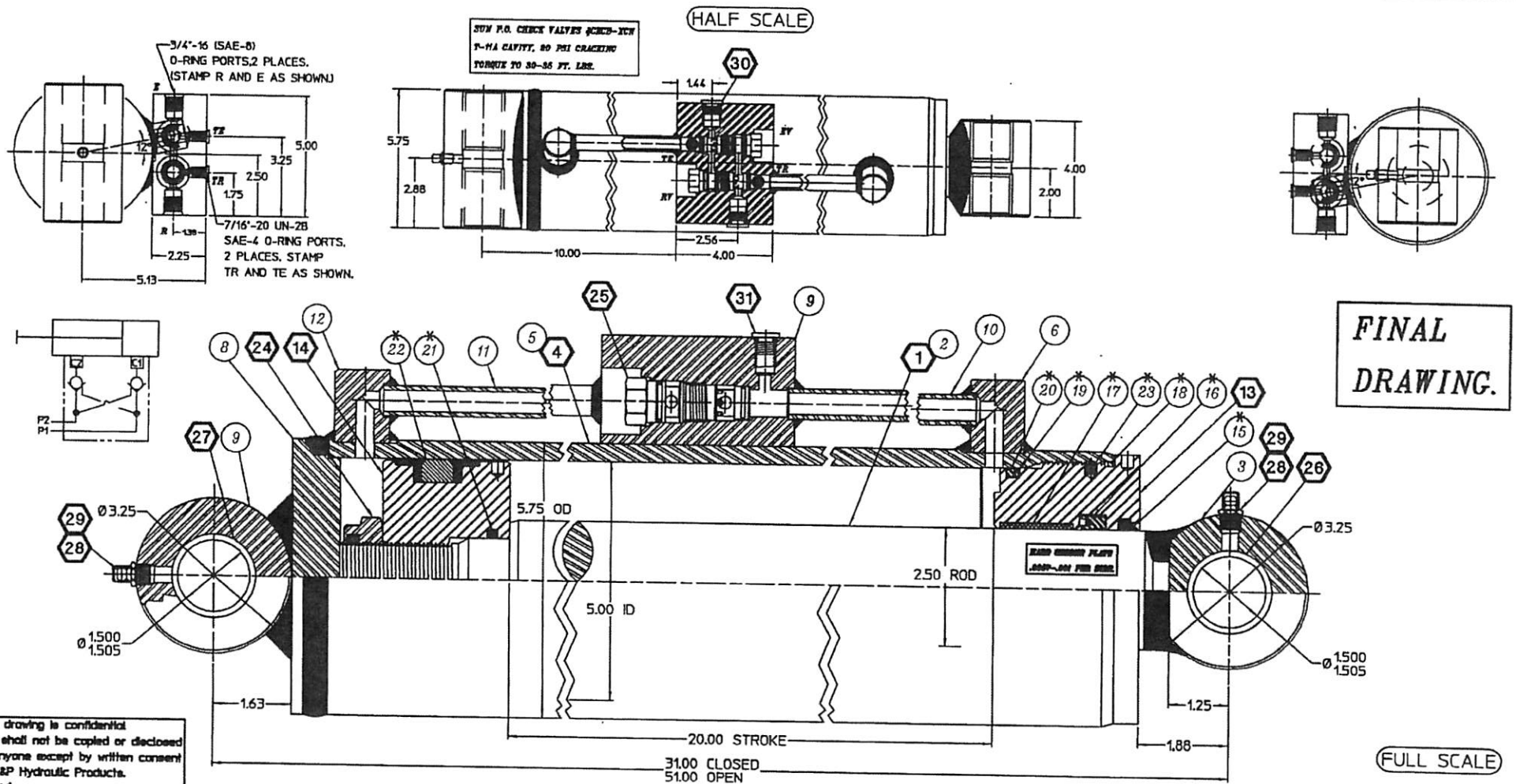

This drawing is confidential and shall not be copied or disclosed to anyone except by written consent of V&P Hydraulic Products.
Signed:
Dated:

PARTS MARKED CAN BE PURCHASED BY CUSTOMER.

PART NO.	QUAN.	DESCRIPTION	NO.	PART NO.	QUAN.	DESCRIPTION
04451-50362	1	ROD SEAL				
053-25344	1	ROD WIPER	31	03224-61672	2	STEEL PLUG
506-5009568	1	PISTON	30	03224-38115	2	STEEL PLUG
502-5008778	1	PACK HEAD	29	03214-250667	2	GREASE CAP
534-81267A	1	ELBOW	28	032-70022	2	GREASE FITTING
519-501769A	1	OIL LINE	27	031-501772A	2	BUSHING
519-501768A	1	OIL LINE	26	031-501771A	2	BUSHING
601-81158C	1	VALVE BLOCK	25	057-401182	2	P.O. CHECK VALVE
528-5017598	1	BASE EYE	24	034-55566	1	LOCK NUT
523-5012738	1	END COVER	23	546-41946	1	LOCK
534-81267A	1	ELBOW	22	041-51920	1	PISTON SEAL
505-5032308	1	CYLINDER WALL	21	036-27416	1	O-RING
524-5032498	1	WALL ASSEMBLY	20	036-50066	1	O-RING
528-5017538	1	ROD EYE	19	028-50065	1	BACK-UP RING
501-5017518	1	PISTON ROD	18	036-42690	1	O-RING
504-5017548	1	ROD ASSEMBLY	17	059-65587	1	WEAR RING

QUAN.	PART NO.	DESCRIPTION
1	546-41946	LOCK
1	034-55566	LOCK NUT
1	041-51920	PISTON SEAL
1	036-27416	O-RING
1	036-105016	O-RING
1	036-50066	O-RING
1	028-50065	BACK-UP RING
1	036-42690	O-RING
1	059-65587	WEAR RING
1	04451-50362	ROD SEAL
1	053-25344	ROD WIPER
*	549-501750	SEAL KIT

ENGINEERING DATA:
EFFECTIVE AREA EXTEND 19.64 SQ.IN.
EFFECTIVE EXTEND FORCE AT:
2750 PSI OPERATING PRESSURE 54,010 LBS.
3250 PSI SYSTEM RELIEF PRESSURE 63,814 LBS.
EFFECTIVE AREA RETRACT 14.73 SQ.IN.
EFFECTIVE RETRACT FORCE AT:
2750 PSI OPERATING PRESSURE 40,507 LBS.
3250 PSI SYSTEM RELIEF PRESSURE 47,863 LBS.
DISPLACEMENT IN EXTEND 1.70 GAL.
DISPLACEMENT IN RETRACT 1.24 GAL.
TEST PRESSURE 3250 PSI
MAX. OPERATING PRESSURE FOR SEALS: 5000 PSI

DESIGN MARGINS BASED ON YIELD @ 3250 PSI:
BUCKLING LOAD: 16.254:1
HOOP STRESS: 3.382:1
PIN EYE STRESS: 2.505:1 (ROD END)
PIN EYE STRESS: 3.601:1 (BASE END)
END COVER STRESS 2.958:1

THREAD CALCULATIONS BASED ON TENSILE:
ROD/PISTON THREADS:
PRESSURE TO SHEAR EXTERNAL THREADS: 23,725 PSI
DESIGN MARGIN 7.30:1
PRESSURE TO SHEAR INTERNAL THREADS: 24,819 PSI
DESIGN MARGIN 7.63:1
HEAD/BODY THREADS:
MATERIAL TENSILE/EXTERNAL THREADS: 80,000 PSI
DESIGN MARGIN 10.27
MATERIAL TENSILE/INTERNAL THREADS: 85,000 PSI
DESIGN MARGIN 11.11

ANGLES ±2°
2 PLACE DEC. ±.02
3 PLACE DEC. ±.002

Int.	No.	Change Date

SKYLIFT
LORAIN, OHIO

500-503225

MINI-DEREK BOOM LIFT

5.00 DIA.X 20.00 STROKE
D/A HYDRAULIC CYLINDER

DRAWN BY SCHLANGER
SCALE NOTED
DATE 04/21/11

V & P HYDRAULIC PRODU
DELAWARE OHIO

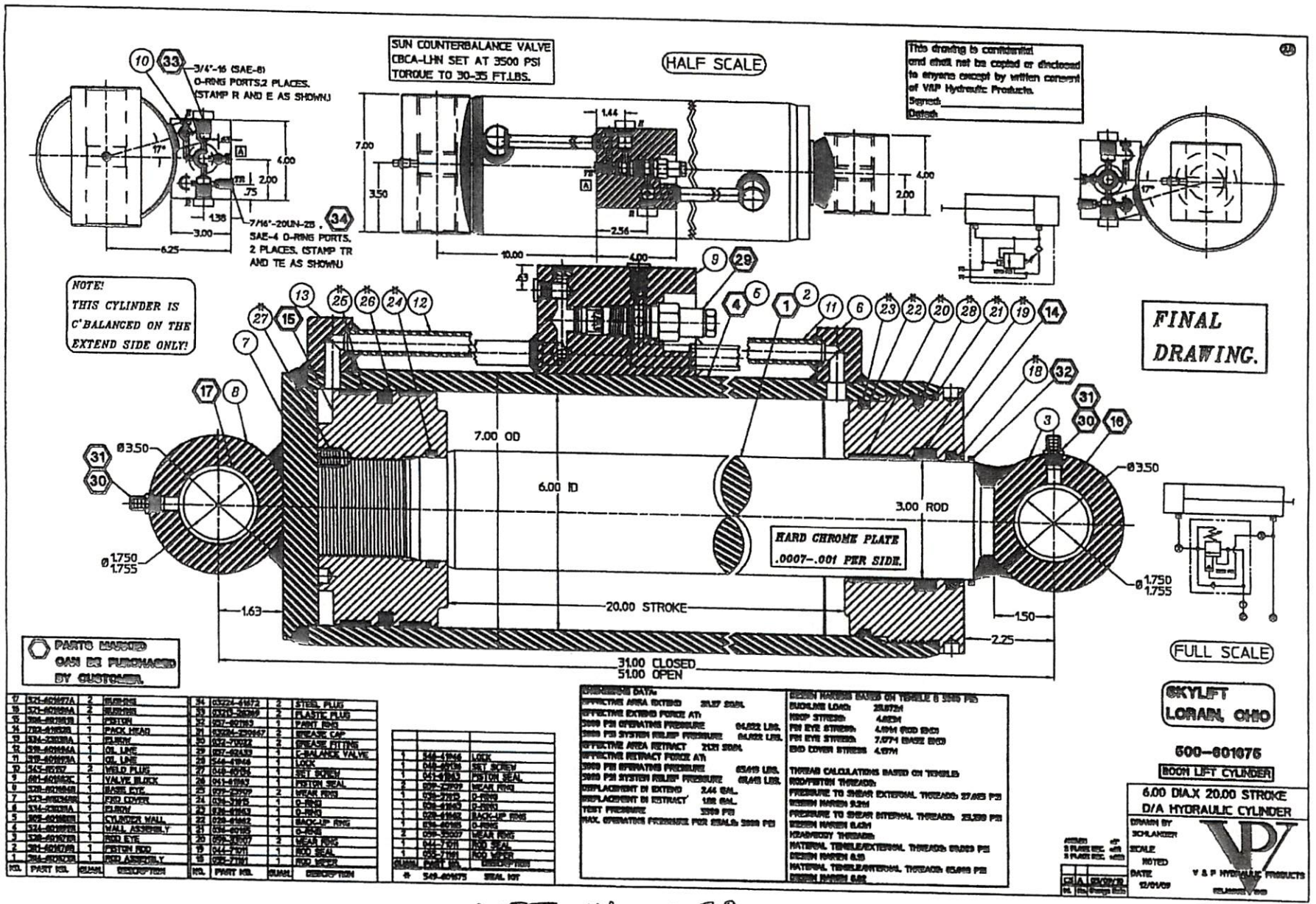

LIFT CYLINDER

PDF created with pdfFactory trial version www.pdffactory.com

IMO

Installation and Operating Manual

Slew Drives

WD-L, WD-H, SP-L, SP-I, SP-M, SP-H

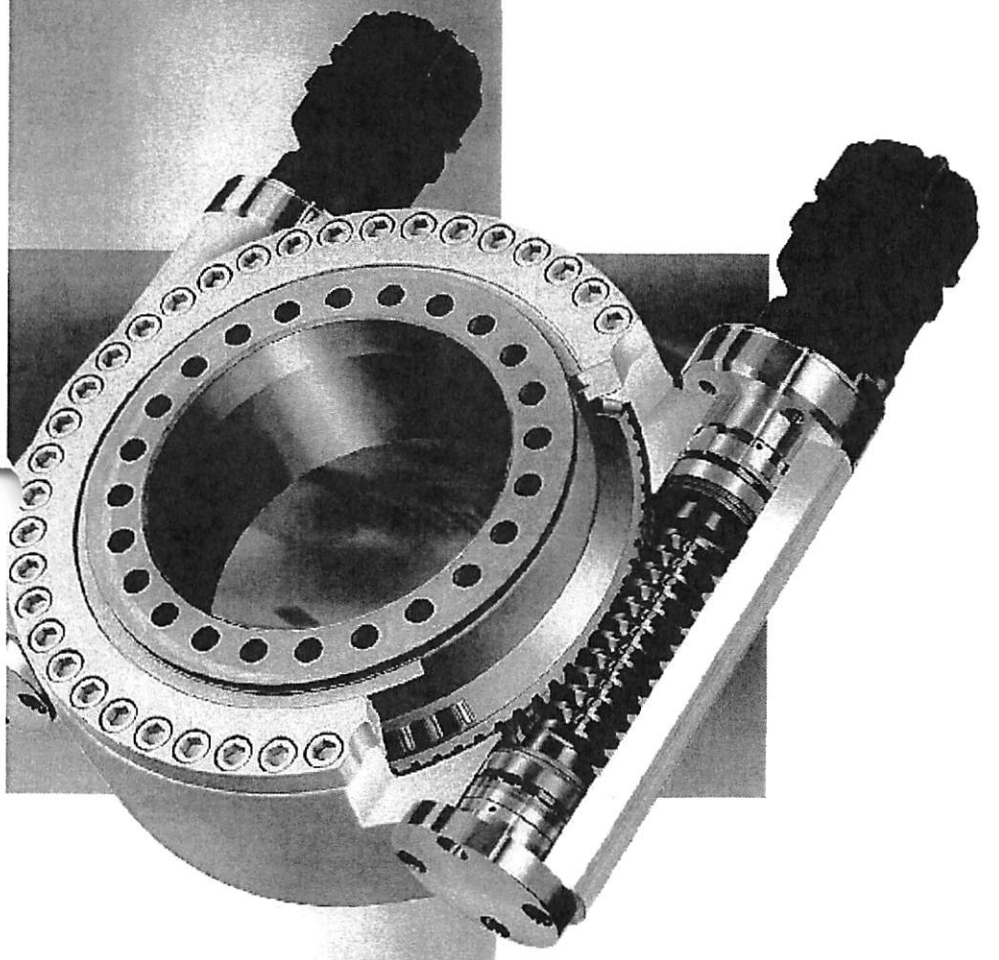

IO SD 1.00

Read the operating manual prior to starting all work!

This operating manual provides important instructions for working with the component. The specified instructions must be precisely followed, to protect yourself and others.
Inform yourself of the locally applicable accident prevention regulations and the general safety regulations.
The operating manual must be carefully read prior to starting any work! It is a component of the product and must be kept in the immediate vicinity of the component. It must be accessible to personnel at all times.
If this component is provided to a third party ensure that the operating manual is provided with the component.
The illustrations in this manual are provided for the purpose of better understanding. They are not necessarily true to scale and can deviate from the actual design of the component.

© IMO Antriebseinheit GmbH & Co. KG
Gewerbepark 16
91350 Gremsdorf, Germany

Tel.: +49 9193 6395-20
Fax: +49 9193 6395-2140

email: slew.drives@goimo.com
Internet: www.goimo.com

Customer Service:
Tel.: +49 9193 6395-2200
email: service@goimo.com

Table of contents

1 Structure and function 5
1.1 Brief description 5
1.2 Overview 5
1.2.1 WD-L series (light series) 5
1.2.2 WD-H series (heavy series) 6
1.2.3 SP series 7
1.3 Intended use 8

2 General 9
2.1 Explanation of symbols 9
2.2 Limitation of liability 9
2.3 Copyright 10
2.4 Original IMO parts 10
2.5 Customer Service 11

3 Safety 12
3.1 Safety devices 12
3.2 Special dangers 12
3.3 Responsibility of the customer 13
3.4 Personnel requirements 14
3.5 Personal protective equipment 14

4 Transport, packaging, and storage 16
4.1 Safety instructions for transport 16
4.2 Transport 16
4.3 Transport inspection/incoming goods inspection 18
4.4 Packaging 19
4.5 Symbols on the packaging 19
4.6 Storage 20

5 Installation and commissioning 21
5.1 Safety 21
5.2 Preparation 22
5.2.1 Lubricating prior to commissioning 22
5.2.2 Cleaning the slew drive and mounting structure 22
5.2.3 Determination of flatness deviation, and perpendicularity deviation and deformation of the mounting structure 23
5.2.4 Selecting the mounting elements 26
5.2.5 Tightening bolts with a torque wrench 27
5.2.6 Tightening bolts with a hydraulic bolt-tensioning cylinder 28
5.3 Installing the slew drive 30
5.3.1 Hardness gap 30
5.3.2 Positioning the slew drive 30

Table of contents

5.3.3 Bolting the slew drive 31
5.3.4 Determining the tilting clearance 33
5.3.5 Determining the circumferential backlash 34
5.4 Function test 35

6 Maintenance 36
6.1 Safety 36
6.2 Cleaning 37
6.3 Maintenance schedule 37
6.4 Maintenance tasks 39
6.4.1 Inspecting the mounting bolts 39
6.4.2 Checking the tilting clearance 39
6.4.3 Checking the circumferential backlash 40
6.4.4 Lubricating the slew drive 41
6.4.5 Inspecting the seals 42
6.5 Measures after successful maintenance 42

7 Dismantling 43
7.1 Safety 43
7.2 Dismantling 44
7.3 Disposal 44

8 Technical data – Type plate 45

1 Structure and function

1.1 Brief description

Slew drives are used for concurrent transmission of axial and radial forces, as well as transmission of tilting moments. Slew drives consist of a ball or roller slewing ring, hydraulic or electric drives, and a completely enclosing housing. Force is transmitted to the mounting structure through bolts. For this purpose through holes or threads are provided in the inner and outer ring.

1.2 Overview

Series WD slew drives are designed with worm gear. Series SP slew drives are designed with spur gear and straight toothing.

1.2.1 WD-L series (light series)

The lighter series is designated as the WD-L series. The drive motor (hydraulic/electric) is optional. Additional optional components are potentiometers, permanent brake or front-end brake.

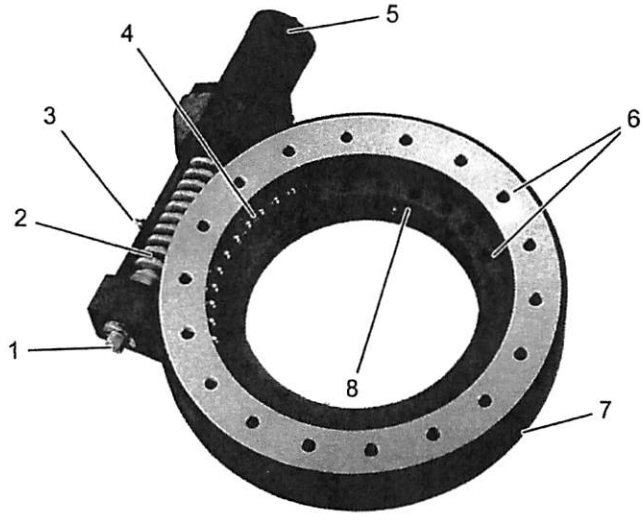

Fig. 1: Slew drive WD-L

1 Connection for options: Potentiometer, permanent brake or front-end brake
2 Worm shaft
3 Lubricating nipple
4 Ball slewing ring
5 Option: Drive motor
6 Bolted unions for the mounting structure
7 Housing
8 Lubricating nipple

1.2.2 WD-H series (heavy series)

The heavy series is designated as the WD-H series. The drive motors (hydraulic/electric) are optional. Additional optional components are potentiometers, permanent brake or front-end brake.

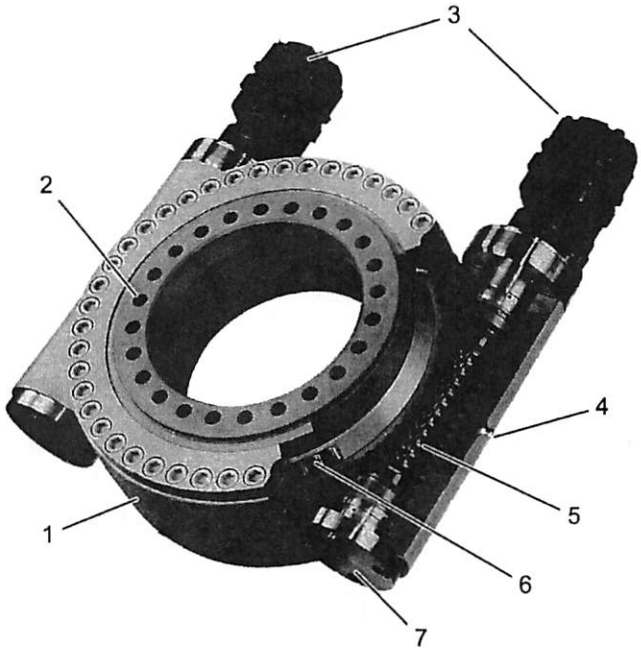

Fig. 2: Slew drive WD-H

1 Housing
2 Bolted unions for the mounting structure
3 Option: Drive motors
4 Lubricating nipple
5 Worm shaft
6 Roller slewing ring
7 Connection possibility for add-on parts

1.2.3 SP series

The SP slew drive is powered by a pinion gear unit. The drive motor (hydraulic/electric) is optional.

SP-L, light version

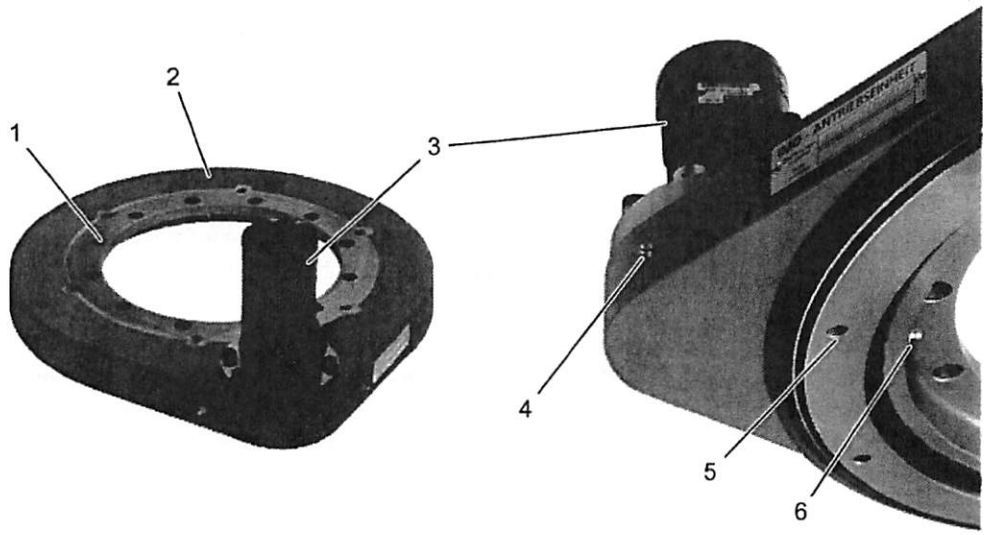

Fig. 3: Slew drive SP-L, light version

1 Bolted unions for the mounting structure
2 Housing
3 Drive motors
4 Lubricating nipple for tooth mesh
5 Bolted unions for the mounting structure
6 Lubricating nipple for raceway

Additional versions

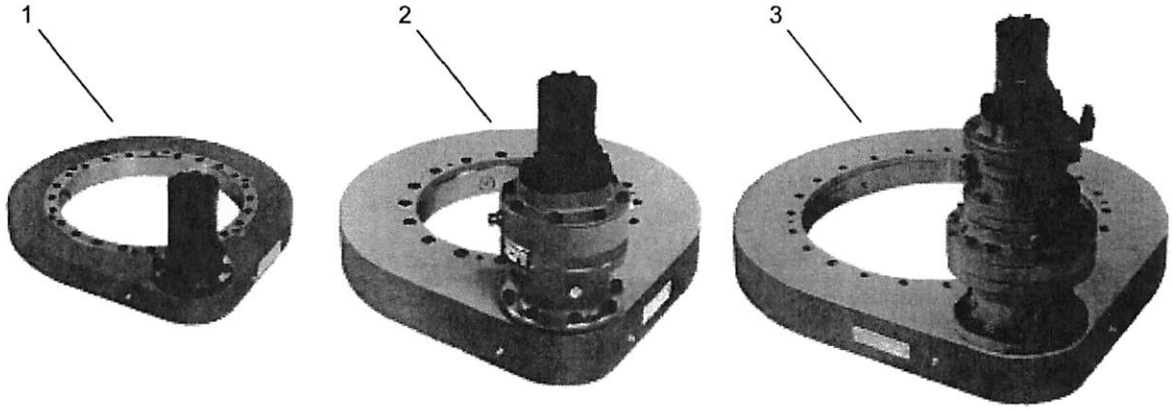

Fig. 4: Additional SP slew drives

1 SP-I, reinforced version
2 SP-M, medium version
3 SP-H, heavy version

1.3 Intended use

⚠ WARNING

The component is not designed for use in potentially explosive atmospheres. Misuse of the component may cause dangerous situations.

The component has been designed and manufactured exclusively for the use according to this Installation and Operating Manual.

The slew drive is used

- as a drive for generating a rotary movement as well as the absorption of radial, axial forces and tilting moments. For example it is used as steering gear for crane undercarriages, manlift platforms, construction machines, mining and tunneling.

Modification, retooling, or changing the construction or individual parts of the equipment with the objective of changing the area of application or usability of the component is not permitted, as this is not considered intended use.

Claims of any type due to damage arising from improper use are excluded.

The customer is solely liable for all damage in the case of improper use.

2 General

2.1 Explanation of symbols

Warnings

Warnings in this operating manual are indicated by a warning symbol (⚠) and/or signal words. The scope of the hazard is described by signal words.
The warnings must be strictly heeded; you must act prudently to prevent accidents, personal injury, and material damage, as well as life-threatening danger.

Warning symbol / signal word	Explanation
⚠DANGER or DANGER!	Indicates an imminent dangerous situation that can result in death or serious injury if it is not avoided.
⚠WARNING or WARNING!	Indicates a possible dangerous situation that can result in death or serious injury if it is not avoided.
⚠CAUTION or CAUTION!	Indicates a possible dangerous situation that can result in minor injury if it is not avoided.
IMPORTANT or IMPORTANT!	Indicates a possible dangerous situation that can result in material damage if it is not avoided.
Tips and recommendations	**Explanation**
ⓘ	Indicates useful tips and recommendations as well as information for efficient and trouble-free operation.

2.2 Limitation of liability

All information and instructions in this operating manual have been provided under due consideration of applicable guidelines, the current state of technology, as well as our many years of experience.

The manufacturer assumes no liability for damages due to:

- Failure to follow the instructions in this manual
- Non-intended use
- Deployment of untrained personnel
- Unauthorized conversions
- Technical changes
- Use of non-approved spare parts

The actual scope of delivery can vary from the explanations and graphic representations provided in this manual in the case of special versions, if supplemental order options are desired, or on the basis of the latest technical changes.

In all other respects the agreed obligations in the delivery contract, the general terms and conditions, as well as delivery conditions of the manufacturer, and the statutory regulations valid at the time the contract was concluded, apply.

We reserve the right to make changes in the interest of enhancements and improvement of the performance characteristics.

2.3 Copyright

© Copyright 2010, IMO Antriebseinheit GmbH & Co. KG

The information contained in this operating manual and/or in all parts, sub-sections, or sections of this manual is the intellectual property of IMO Antriebseinheit GmbH & Co. KG, and is subject to German and international copyright legislation and other laws that protect intellectual property.

The information contained in this manual is provided as in aid in operating, maintaining, and eliminating faults of the units described here.

Duplication, reproduction, translation, microfilming, storing in electronic or magnetic form, imitation, or forwarding of these materials and/or the information contained without the previous written consent of IMO Antriebseinheit GmbH & Co. KG, is strictly prohibited.

All rights and legal remedies remain expressly reserved.

Actions to the contrary will be prosecuted.

IMO Antriebseinheit GmbH & Co. KG assumes no liability for improper use of the information contained here by persons or legal entities, regardless of the location.

IMO Antriebseinheit GmbH & Co. KG reserves the right at any time and regardless of reason, to change or modify the information contained here, as well change and modify the system itself, with or without prior notice.

2.4 Original IMO parts

⚠ WARNING

Only use original IMO parts! Use of non-authorized, wrong, or defective spare parts may cause damage, and failures, or may impair the safety of the device and thus cause severe or fatal injuries.

Purchase original IMO parts from authorized dealers or direct from the manufacturer (⇨ page 2).

2.5 Customer Service

Our customer service is available for technical information (⇨ page 2).

Our employees are always interested in new information and experiences associated with the application, and which could prove valuable in improving our products.

3 Safety

This section provides an overview of all the important safety aspects for optimal protection of personnel, as well as for safe and trouble-free operation.

Significant hazards can occur if the handling instructions and safety instructions in this manual are not complied with.

3.1 Safety devices

Integration in an emergency-stop concept is required

The component is designed for utilization within a system. It does not have its own controller and does not have an autonomous emergency-stop function.
Before the component is placed in service, emergency-stop devices must be installed on the device and integrated in the safety chain of the plant control system.
The emergency-stop devices must be connected in such a manner that dangerous situations for persons and property are excluded in the event of power supply interruption, or activation of the power supply after an interruption.
The emergency-stop devices must always be freely accessible.

3.2 Special dangers

Residual risks are cited in the following section.

⚠ WARNING

Comply with the safety instructions listed here and the warning instructions in the other chapters of this manual to reduce health hazards and to avoid dangerous situations.

Electrical current

DANGER! Only have qualified electricians perform work on electrical components of the system!
Improper installation of components, or improper handling of electrical equipment may result in injuries and life-threatening danger.
If insulation is damaged immediately switch off the power supply and have the system repaired by a qualified electrician!
Keep moisture away from electrical components. Moisture can cause short circuits.

Hydraulic system

DANGER! Only have trained, specialized personnel perform work on the hydraulic equipment. De-pressurize the hydraulic system prior to starting work on the hydraulic system. Completely de-pressurize the pressure accumulator. Ensure that the system is de-pressurized. Do not change pressure settings to exceed the maximum values. Hydraulically powered parts may move unexpectedly.
Hydraulic energy may cause severe or fatal injuries.

VCI foil

DANGER! Keep out of reach of children and dispose of properly. If used improperly there is danger of suffocation. Avoid skin and eye contact with VCI foil. Repeated or longer skin contact may dissolve skin fat and cause dermatitis.

Moving parts

WARNING! Do not reach into moving parts or handle moving parts during operation. Do not open covers when the device is in operation. Pay attention to overtravel time: Prior to opening the cover ensure that all parts have come to a standstill. Wear tight-fitting work clothing in the danger zone. Rotating components and/or components with linear movements may cause serious injury!

Falling materials

WARNING! Never enter the danger zones during operation. In operation heavy material can fall uncontrolled or it may be accelerated out of the device and cause severe injuries.

Fouling and loose objects

CAUTION! Always keep the work area clean. Remove objects that are not being used. Mark stumbling hazards with a black/yellow marking tape. Fouling and loose objects on the ground pose slipping and stumbling hazards and may cause severe injuries.

3.3 Responsibility of the customer

Customer

The customer is the person or entity that operates the component himself for commercial or economic purposes, or who transfers the device to a third person for use/application, and who bears the legal responsibility for protecting the users or third parties.

The component is used in commercial applications. Consequently the owner of the component is subject to legal industrial safety obligations.

In addition to the safety instructions in this manual, generally valid safety and accident protection guidelines, and environmental protection guidelines must be heeded and complied with for the area of implementation of the component. In this regard:

- The customer must inform himself of applicable industrial safety regulations, and in a hazard analysis identify other hazards that may exist at the installation site of the component due to the special work conditions. Customer must convert this information relative to hazards into operating instructions for operation of the component.
- The customer must ensure during the entire period of component implementation that the operating instructions created by the customer correspond to the current state of legislation, and if necessary the customer must adapt these operating instructions.
- The customer must clearly regulate and specify responsibilities for installation, operation, maintenance, and cleaning.
- The customer must ensure that all employees who handle the component have read and understood this manual.
  In addition, customer must train personnel and inform personnel of the hazards at regular intervals.
- The customer must provide the required protective equipment for personnel.

Moreover the customer is responsible for ensuring that the component is always in faultless technical condition; consequently the following applies:

- The customer must ensure that the maintenance intervals described in this operating manual are observed.
- The customer must have all safety devices inspected regularly for function and for completeness.

The seals in the slew drive are subject to a certain amount of wear. From time to time it is necessary to check the seals for trouble-free seat and function. However depending on system runtime it may also be necessary to replace the seals. Thus the system manufacturer must ensure that sufficient space and accessibility for inspecting and replacing the seals are available on the total circumference of the slew drive.

3.4 Personnel requirements

Unauthorized person

WARNING! **Unauthorized persons should not enter the work area! Unauthorized persons may cause dangerous situations.**

Specialized personnel

Specialized personnel are personnel who thanks to their specialized training, skills, and experience, as well as knowledge of the applicable regulations are capable of executing the tasks assigned to them and of recognizing possible hazards on their own.

Qualified electrician

...is a person who thanks to his specialized training, skills, and experience, as well as knowledge of the applicable regulations is capable of executing work on electrical equipment and of recognizing possible hazards on his own. The qualified electrician is especially trained for the work environment in which he is active and knows all relevant standards and regulations.
In Germany the qualified electrician must meet the requirements set forth in the accident prevention guideline BGV A3 (e.g. master electrical contractor). Similar regulations apply in other countries.

3.5 Personal protective equipment

Wearing personal protective equipment is required to minimize the health hazards when working with the device.

- Always wear the protective equipment necessary for the respective task when working with the device.
- Follow the instructions that have been posted in the work area.

Always wear

For all tasks always wear:

Protective work clothing
is tight-fitting work clothing with low resistance to tearing, with tight sleeves, and without projecting parts. It is primarily used as a protection against entanglement by moving machine parts.
Do not wear rings, chains, or other jewelry.

Safety footwear
for protection against heavy falling parts and slipping on slippery substrates.

Protective gloves
to protect hands from friction, abrasion, puncture wounds, or deeper injuries, as well as from contact with hot surfaces.

For special tasks wear

Special protective equipment is required when executing special tasks. Separate reference is made to this equipment in the specific sections. This special protective equipment is explained below:

Face protection
to protect the eyes and face from solvents.

Chemical-resistant protective gloves
to protect hands from aggressive substances.
Check protective gloves for leaks prior to use. Clean the gloves before pulling them off, store them in a well-ventilated location.

4 Transport, packaging, and storage

4.1 Safety instructions for transport

⚠ WARNING

Never position yourself under a suspended load! Swinging or falling parts may cause injury or life-threatening danger.

⚠ WARNING

Carefully supervise the lifting processes and transport. Only use the transport methods described here. A life-threatening crushing hazard exists if the slew drive falls.

IMPORTANT

Proceed with caution when transporting objects! Comply with instruction symbols on the packages and only use the prescribed attachment points. Improper transport may cause significant damage.

IMPORTANT

Avoid impact when transporting! Improper transport may cause significant damage to the component.

4.2 Transport

Transport by specialized personnel only!

Transporting packages

Packages that are not attached to pallets can be transported with a forklift or forklift truck under the following conditions:

- The forklift or forklift truck must be configured appropriately for the weight of the transport units.
- The operator must be authorized to operate the forklift.

Attachment:

1. Place sufficiently long and wide extensions (e.g. of wood or metal) between the forks and the package so that the weight is distributed on the support surface.
2. Drive in the forks, with extensions if needed, far enough that they protrude on the opposite side.
3. If there is an eccentric center of gravity, ensure that the package cannot tip.
4. Lift the package and start the transport.

Transporting pallets with the crane

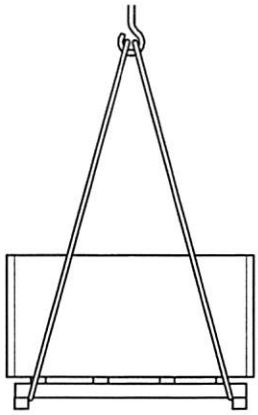

Fig. 5 Transporting with the crane

Packages that are attached to pallets can be transported with a crane under the following conditions:

- Crane and hoist must be designed for the weight of the packages.
- The operator must be authorized to operate the crane.

Attachment:

1. Attach ropes, straps, or multi-point suspensions to the pallet as shown in Fig. 5 and ensure that they cannot slip.
2. Ensure that the packages cannot be damaged by the lifting tackle. Use other lifting tackle if necessary.
3. Start the transport.

Transporting pallets with the forklift

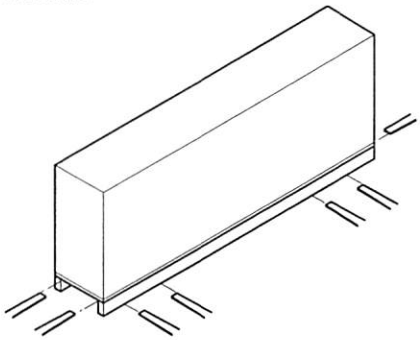

Fig. 6 Transporting with the forklift

Packages that are attached to pallets can be transported with a forklift under the following conditions:

- The forklift must be configured appropriately for the weight of the transport units.
- The operator must be authorized to operate the forklift.

Attachment:

1. Drive the forklift with the forks between or under the spars of the pallet.
2. Drive in the forks until they protrude on the opposite side.
3. If there is an eccentric center of gravity, ensure that the pallet cannot tip.
4. Lift the package and start the transport.

Transporting unpacked slew drives

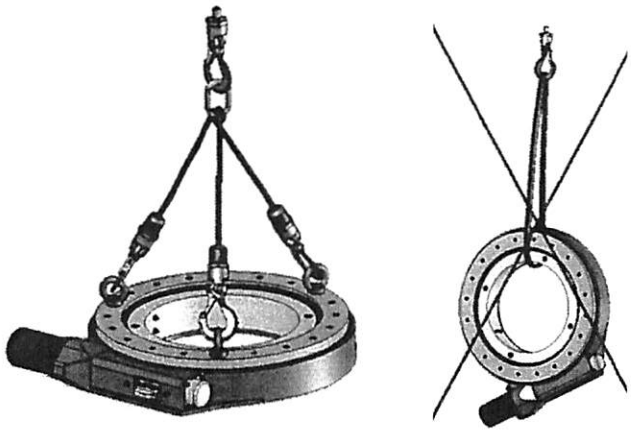

Fig. 7: Use suitable lifting gear/never transport product vertically

Unpacked slew drives can be transported with lifting gear when using eye bolts under the following conditions

- The lifting gear must be configured appropriately for the weight of the transport units.
- The ring bolts must be configured appropriately for the weight of the transport unit.
- The slew drive shall only be transported by itself, without attached parts.
- Maintain the insertion depth prescribed by the manufacturer. If insertion depth is not prescribed, then a minimum insertion depth of 1.5 x the bolt diameter must be selected.
- Transport within the company shall only be executed horizontally.

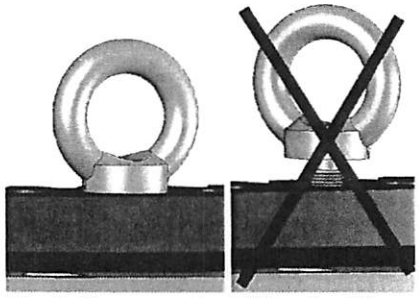

Fig. 8: Always use the full length of the thread

Attachment:

1. Screw the 3 eye bolts into the 3 threads that are distributed uniformly on the circumference of the slew drive.

WARNING! **Screw in the eye bolts to the full thread length! Improperly attached, unsuitable, or damaged eye bolts may cause the slew drive to fall and cause life-threatening injuries.**

2. Attach lifting gear to the eye bolts.
3. Start the transport.

4.3 Transport inspection/incoming goods inspection

Check delivery immediately upon receipt to ensure that delivery is complete, and to identify any transport damage.

Proceed as follows if there is apparent external damage:

- Do not accept the delivery, or only accept it with reservation.
- Note the extent of transport damage on the transport documents or on the transport company's delivery ticket.
- Submit a complaint.

Report any defect within 2 days of delivery of goods. Claims for damage compensation can only be enforced during this period of notification.

4.4 Packaging

Packaging

The individual boxes are packaged according to the expected transport conditions. Only environmentally-friendly materials have been used for the packaging.
The packaging is designed to protect the individual components against transport damage, corrosion, and other damage until installation. Therefore do not damage the packaging; remove it just before installation.

- If parts are not installed within the agreed storage period, then the customer must ensure that an appropriate preservation agent is applied to these parts.
- Unless otherwise agreed, it is assumed that the parts will be used within 8 weeks.

Handling packaging materials

If a separate agreement regarding handling of the packaging has not been concluded, then separate the materials according to type and size, and keep them on hand for subsequent use, or recycle.

IMPORTANT! **Dispose of packaging materials in an environmentally responsible manner. Environmental damage may be caused by improper disposal.**

4.5 Symbols on the packaging

No user serviceable parts inside!
Unauthorized opening of the slew drive voids the manufacturer's warranty.

NO USER SERVICABLE PARTS INSIDE! UNAUTHORIZED OPENING OF THIS DEVICE VOIDS THE MANUFACTURER'S WARRANTY.

If packed in foil:
Danger!
Choking and asphyxiation hazard!
This bag is not a toy!
Keep away from children!

⚠DANGER

CHOKING AND ASPHYXIATION HAZARD!
This Bag is not a Toy!
Keep away from children!

4.6 Storage

Storage of packages

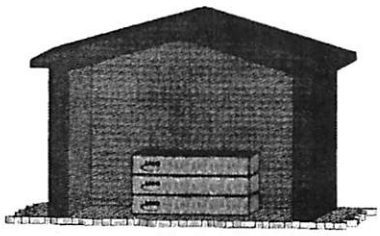

Fig. 9: Ensure protective storage

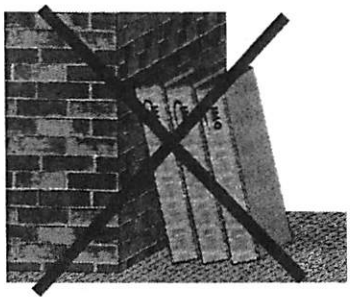

Fig. 10: Do not store vertically

Only store packages under the following conditions:

- Do not store outdoors.
- Store in a dry and dust-free location.
- Do not expose to aggressive media.
- If stacking, use stable intermediate layers.
- Protect from direct sunlight.
- Avoid mechanical vibration.
- Storage temperature: >5° C (>41° F) to 40° C (104° F).
- Relative humidity: < 65 %.
- Do not store vertically.
- For longer periods of storage (> 2 months) regularly check the general status of the packages. Touch up or re-apply anti-corrosion agents as needed.

The anti-corrosion protection period is 12 months, if the aforementioned storage requirements are observed. We recommend to re-apply the preservation after 12 months.

Please refer to tab. 1 below for anti-corrosion agents.

Recommended anti-corrosion agents

Manufacturer	Product name	Period of anti-corrosion protection
Cortec	VpCI™ -329	≥ 12 months
Fuchs Europe Schmierstoffe GmbH	Anticorit OHK-F	≥ 12 months
Schramm	Molecular Nato-Fluid-C634	≥ 12 months

Tab. 1

Long-term preservation is possible for storages which are planned for several years and can already be discussed during the technical consultation. Re-application of anti-corrosion agents as well as initial greasing can be performed by our customer service (⇨ page 2) prior to operation.

Greased slew drives shall not be stored for a longer period than 3 years. Greases can change their chemical-physical behaviour during storage. Grease provisions can be diminished by a storage period of more than 3 years. The storage of slew drives shall not exceed 1 year if food lubricants are used.

Under certain circumstances storage instructions are affixed to the packages that go beyond the requirements cited here. Comply with these instructions accordingly.

5 Installation and commissioning

5.1 Safety

⚠DANGER

Prior to starting work switch off all energy supplies and safeguard them from being switched on again. If the power supply is switched on by unauthorized personnel, a life-threatening danger exists for persons in the danger zone.

⚠WARNING

Prior to starting work ensure that there is adequate free space for installation. Handle open, sharp-edged components carefully. Ensure order and cleanliness at the installation location! Parts and tools that are lying loose or on top of each other are accident hazards! Mount components properly. Maintain the prescribed bolt torque and fastening torque. Secure the components so that they do not fall down or fall over. Improper installation and commissioning may cause serious personal injury and/or property damage.

⚠WARNING

Never position yourself under a suspended load! Swinging or falling parts may cause injury or life-threatening danger.

⚠WARNING

Carefully supervise the lifting processes and transport. Only use the transport methods described here. A life-threatening crushing hazard exists if the components fall.

IMPORTANT

Proceed with caution when transporting objects! Comply with instruction symbols on the packages and only use the prescribed attachment points. Improper transport may cause significant damage.

IMPORTANT

Avoid impact when transporting! Improper transport may cause significant damage.

IMPORTANT

Seals shall not be overpainted! Overpainting may cause significant damage.

IMPORTANT

Prevent damage to coating and painting of slew drives. Please refer to our customer service (⇨ page 2), if the coating is damaged.

ⓘ Follow the instructions provided in the operating manuals for the drive motors (hydraulic or electric), as well as the instructions provided with the optional potentiometer or permanent brake.

Personnel

- Only trained, skilled personnel should perform installation and commissioning work.

Personal protective equipment

Wear the following protective equipment for all installation and commissioning work:

- Protective work clothing
- Safety footwear
- Protective gloves

The warnings in this chapter make special reference to additional protective equipment that is required for certain tasks.

5.2 Preparation

5.2.1 Lubricating prior to commissioning

Slew drives have been lubricated in the factory prior to delivery. Nevertheless, prior to commissioning the slew drive must be lubricated (⇨ section 6.4.4 "Lubricating the slew drive").

5.2.2 Cleaning the slew drive and mounting structure

Wear the following additional protective equipment for cleaning work:

Face protection
to protect the eyes and face from solvents.

Chemical-resistant protective gloves
to protect hands from aggressive substances.
Check protective gloves for leaks prior to use. Clean the gloves before pulling them off, store them in a well-ventilated location.

Fig. 11: Do not let cleaning agents get into the slew drive

Cleaning:
IMPORTANT! **Only use cold solvents (e.g. white spirit, diesel oil, Kaltryl KEV) that do not corrode the sealing material. Ensure that the cleaning agent does not get into the slew drive. Do not use a high-pressure cleaner to clean the slew drive. Unsuitable trichloroethylene-based or perchloroethylene-based cleaning agents, or other aggressive cleaners damage the seal and may cause bearing damage.**

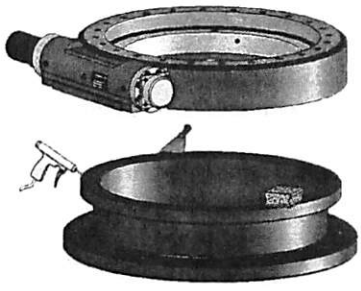

- When using cleaning agents, ensure adequate ventilation.
- Maintain a strict ban on smoking.
- Remove old grease, dust, and fouling with lint-free cloths.
- Remove foreign material from the support surface of the mounting structure (including paint residue, welding beads, burrs).
- If necessary clean the support surface of the slew drive.
- Strictly comply with industrial safety regulations.

Fig. 12: Cleaning

5.2.3 Determination of flatness deviation, and perpendicularity deviation and deformation of the mounting structure

IMPORTANT

If there are impermissibly high deviations in flatness and perpendicularity in the mounting structure, then rotational resistance of the slew drive may significantly increase and damage the entire slew drive. In the worst case the slew drive may block.
If the permissible values for flatness or perpendicularity deviation are exceeded, the mounting structure of the slew drive shall be replaced or reworked.

Determination of flatness deviation, and perpendicularity deviation of the mounting structure

The mounting structure can be measured using a measuring plate and dial gauges.
Laser processes and measuring with 3D systems have also proven to be effective. These systems can be used without additional auxiliary material, and they can document the actual gradient of the mounting structure and process it accordingly.

Flatness deviation

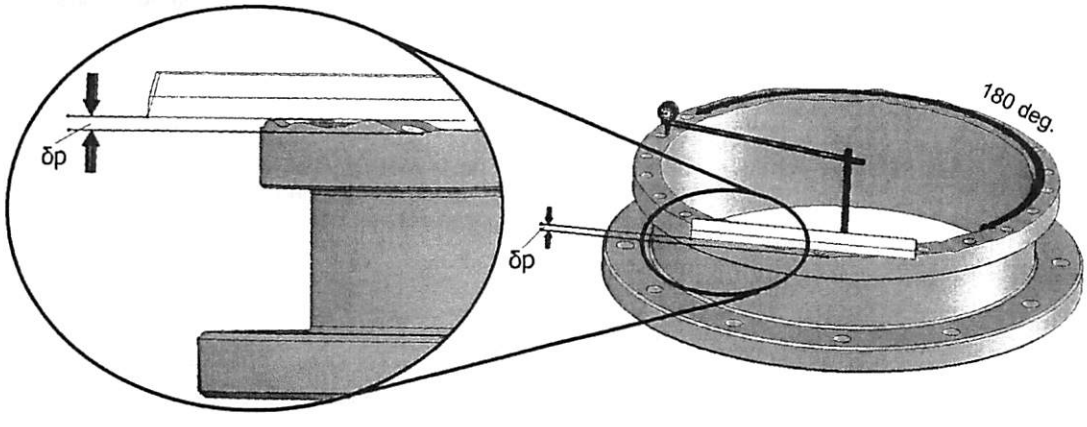

Fig. 13: Flatness deviation

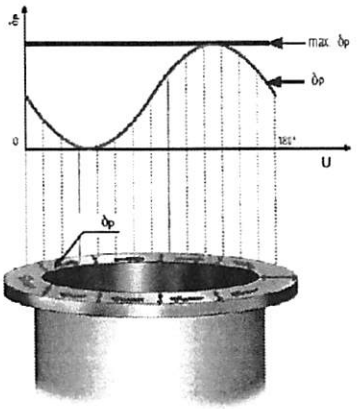

Abb. 14: Permissible flatness deviation of the mounting structure

δp = flatness deviation
max. δp = maximum flatness deviation
U = circumference

- The maximum residual value for flatness deviation δp in the circumferential direction should only be reached once on half of the circumference. The gradient must look like a sinus curve that slowly rises or falls.

Perpendicularity deviation

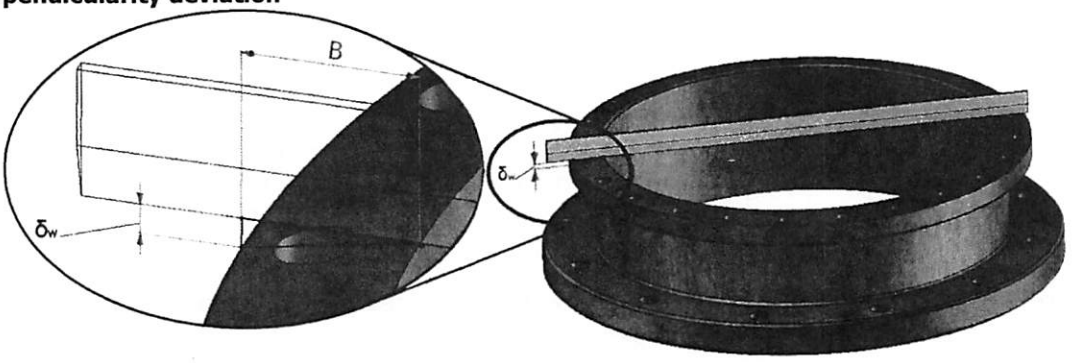

Fig. 15: Perpendicularity deviation

δw = perpendicularity deviation
B = flange width

- The permissible perpendicular deviation δw (tilting) is based on the actual flange width and should only be half of the values from the tables below.

XX - X(X) XXXX / X - XXXXX
1

Fig. 16: Drawing number

The size of the slew drive (WD-H) or of the running circle diameter D_L (WD-L/SP) is indicated in the drawing number at position (1) and is shown in all documents and the type plate.

For slew drives that are between the specified sizes, always assume the smaller value. For slew drives that are larger than the largest diameter, use the largest specified value.

The slew drive must be supported by the mounting structure up to the diameter specified in the slew drive drawing.

Permissible flatness and perpendicularity deviation for series WD-L and SP slew drives

Running circle diameter [mm]		≥100	≥250	≥500	≥750	≥1000	≥1250
Permissible flatness deviation including perpendicularity deviation per support surface	[mm]	0.04	0.06	0.08	0.09	0.10	0.11
	[in]	0.0016	0.0024	0.0032	0.0036	0.0040	0.0044

Tab. 2

Permissible flatness and perpendicularity deviation for series WD-H slew drives

Size of the slew drive		≥146	≥220	≥300	≥373	≥490	≥625
Permissible flatness deviation including perpendicularity deviation per support surface	[mm]	0.06	0.06	0.07	0.07	0.08	0.09
	[in]	0.0024	0.0024	0.0028	0.0028	0.0032	0.0036

Tab. 3

Determining the deformation of the mounting structure

Under maximum operating load an appropriate deformation of the mounting structure occurs. The dimensions can be detected via dial gauges, laser measurement processes, or 3D measuring systems.

Because in some cases measurement in operation is difficult, determination of deformation can also be executed mathematically, e.g. with the finite element method. Alternatively you can also reference comparable measurements on test rigs.

For slew drives that are between the specified sizes, always assume the smaller value. For slew drives that are larger than the largest diameter, use the largest specified value.

The slew drive must be supported by the mounting structure up to the diameter specified in the slew drive drawing. All the installed dimensions as specified in the drawing must be complied with.

Permissible deformation of the mounting structure, under maximum load for series WD-L and SP slew drives

Running circle diameter [mm]		≥100	≥250	≥500	≥750	≥1000	≥1250
Permissible deformation of the mounting structure per support surface	[mm]	0.13	0.16	0.21	0.24	0.27	0.29
	[in]	0.0052	0.0063	0.0083	0.0095	0.0106	0.0114

Tab. 4

Permissible deformation of the mounting structure, under maximum load for series WD-H slew drives

Size of the slew drive		≥146	≥220	≥300	≥373	≥490	≥625
Permissible deformation of the mounting structure per support surface	[mm]	0.10	0.11	0.12	0.13	0.15	0.16
	[in]	0.0040	0.0044	0.0048	0.0052	0.0059	0.0063

Tab. 5

IMPORTANT

Axial deflection, tilting, radial extension (or radial contraction) of the mounting structure under max. load causes deformation of the mounting structure.

5.2.4 Selecting the mounting elements

⚠CAUTION

Only use mounting elements of the correct size, number and quality. Do not reuse bolts, nuts, and washers. Using unsuitable mounting elements may cause the bolted union to fail and thus the entire construction to fail.

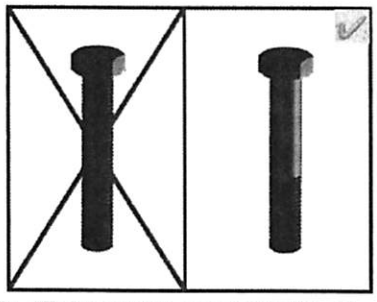

Fig. 17: Do not use continuous thread

The function and service life, as well as the durability of the bolted union are highly dependent on grip ratio, the type of bolt, and the dimensions of the bolts. Consequently select the mounting elements on the basis of the following:

- Do not use any bolts with a fully threaded shaft.
- Only use new, quality class 10.9 (metric) bolts or SAE Grade 8.
- Maintain the grip ratio (grip length to the diameter of the bolt) of at least ≥ 5 to maximum ≤ 10.
- Select bolt length to ensure that the minimum insertion depth is reached (⇨ Tab. 6).
- If the permissible interfacial pressure is exceeded use appropriate washers (⇨ Tab. 7).

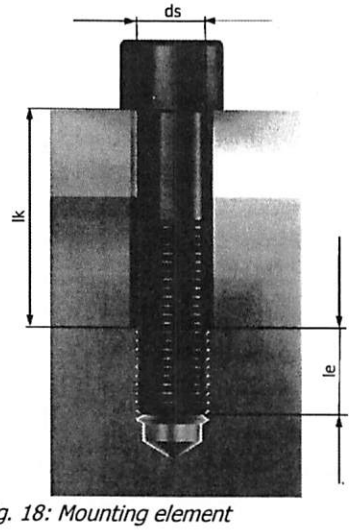

Fig. 18: Mounting element

If the specifications cannot be satisfied, please contact our customer service (⇨ page 2).

Minimum bolt insertion depth depending on fracture strength of the mounting structure

Fracture strength Rm of the mounting structure		Minimum insertion depth (le)
in N/mm²	in lbf/in²	Strength class 10.9 / Grade 8
500 to 700	72520 to 101525	le = 1.4*ds
700 to 900	101525 to 130535	le = 1.1*ds
over 900	over 130535	le = 0.9*ds

Tab. 6

Mounting structures with fracture strength under 500 N/mm² or 72520 lbs/in² are prohibited.

ds = bolt diameter
lk = grip length
le = insertion depth

Permissible interfacial pressure for various materials

Material	Max. surface pressure	
	in N/mm²	in lbs/in²
St52/C45N/46Cr2N	600	87023
46Cr4V/42CrMo4V	800	116030

Tab. 7

5.2.5 Tightening bolts with a torque wrench

Normally the mounting bolts are adequately secured through correct pretension.

⚠WARNING

Do not use impact screwdrivers. Using an impact screwdriver may cause impermissible deviations between the bolt tightening forces. Failure of the bolted union with the mounting structure may cause severe personal injury or material damage.

IMPORTANT

If there are shock loads or vibration additional screw-locking devices may be necessary. In this case use Loctite or Nord-Lock® bolt lock washers.

- Do not use split rings, spring washers, etc.
- Do not reuse bolts, nuts, and washers, etc.
- Only use hardened and tempered washers.
- Adjust the limit torque in accordance with bolt size and quality.
- Use a precisely indicating torque wrench.

Tightening torques and bolt tightening forces for metric coarse-pitched thread in accordance with DIN 13 when using a torque wrench:

Mounting bolt dimensions	Tightening torque M_A [1] Strength class 10.9 in		Mounting pretension force F_M [2] Strength class 10.9 in	
	Nm	ft-lbs	kN	lbs
M4	3.31	2.44	5.95	1338
M5	6.77	4.99	9.74	2190
M6	11.5	8.5	13.7	3080
M8	28.0	20.6	25.2	5665
M10	55.8	41.2	40.2	9037
M12	97.7	72.1	58.5	13151
M16	246	181	111	24954
M18	336	248	134	30124
M20	481	355	173	38892
M22	661	487	216	48559
M24	830	612	249	55977
M27	1230	907	328	73737
M30	1661	1225	398	89474

Tab. 8

[1] M_A in accordance with VDI guideline 2230 (February 2003) for μK=0.08 and μG=0.12

[2] F_M in accordance with VDI guideline 2230 (February 2003) for μG=0.12

Tightening torques and bolt tightening forces for inch thread in accordance with ANSI B1.1 when using a torque wrench:

Mounting bolt dimensions	Tightening torque M_A [1] Strength class Grade 8 in		Mounting pretension force F_M [2] Strength class Grade 8 in	
	Nm	ft-lbs	kN	lbs
0.1900 – 24 UNC	4.80	3.54	7.15	1607
0.2160 – 24 UNC	7.69	5.67	10.1	2271
1/4 – 20 UNC	11.7	8.6	13.2	2967
5/16 – 18 UNC	24.4	18.0	22.1	4968
3/8 – 16 UNC	43.7	32.2	33.0	7419
7/16 – 14 UNC	70.1	51.7	45.4	10206
1/2 – 13 UNC	108	80	61.0	13713
9/16 –12 UNC	156	115	78.6	17670
5/8 – 11 UNC	216	159	97.8	21986
3/4 – 10 UNC	386	285	146	32822
7/8 – 9 UNC	625	461	202	45411
1 – 8 UNC	938	692	266	59799
1 1/8 – 7 UNC	1328	979	334	75086
1 1/4 – 7 UNC	1889	1393	428	96218

Tab. 9

[1] M_A in accordance with VDI guideline 2230 (February 2003) for μK=0.08 and μG=0.12

[2] F_M in accordance with VDI guideline 2230 (February 2003) for μG=0.12

For mounting bolts from M30 or 1 1/8 - 7 UNC use a hydraulic bolt-tensioning cylinder (⇨ chapter 5.2.6 "Tightening bolts with a hydraulic bolt-tensioning cylinder").

When using bolts with fine-pitched thread or other bolt sizes or qualities, please contact our customer service (⇨ page 2).

For further information about bolts, please refer to the IMO main catalogues.

5.2.6 Tightening bolts with a hydraulic bolt-tensioning cylinder

Comply with the instructions provided in the operating manual for the hydraulic fixture! The operating manual for the hydraulic bolt-tensioning cylinder specifies how the hydraulic pressure is converted to the pretension force.

⚠WARNING

The prescribed hydraulic pressure should not be exceeded when pretensioning the bolts. Excess hydraulic pressure may cause failure of the bolted union with the mounting structure and may cause severe personal injury or material damage.

IMPORTANT

When using other threaded bolts or other strength classes you have to contact our customer service (⇨ page 2).

Bolt tension forces when using a hydraulic bolt-tensioning cylinder for metric coarse-pitched thread in accordance with DIN 13:

Mounting bolt dimensions	Mounting pretension force F_M [1] Strength class 10.9 in	
	kN	lbs
M24	282	63396
M27	367	82505
M30	448	100714
M33	554	124544
M36	653	146800
M42	896	201429
M45	1043	234476
M48	1177	264600
M52	1405	315857
M56	1622	364640
M60	1887	424215
M64	2138	480642
M68	2441	548759

Tab. 10

[1] F_M for hydraulic bolt-tensioning cylinder pretensioned to 85% of yield strength

Bolt tension forces when using a hydraulic bolt-tensioning cylinder for inch thread in accordance with ANSI B1.1:

Mounting bolt dimensions	Mounting pretension force F_M [1] Strength class 10.9 in	
	kN	lbs
1 – 8 UNC	301	67668
1 1/8 – 7 UNC	379	85203
1 1/4 – 7 UNC	481	108133
1 3/8 – 6 UNC	573	128816
1 1/2 – 6 UNC	697	156692
1 5/8 – 6 UNC	832	187041
1 3/4 – 5 UNC	942	211770

2 – 4.5 UNC	1239	278538
2 1/4 – 4.5 UNC	1608	361493
2 1/2 – 4 UNC	1981	445347
2 3/4 – 4 UNC	2442	548984

Tab. 11

[1] F_M for hydraulic bolt-tensioning cylinder pretensioned to 85% of yield strength

5.3 Installing the slew drive

5.3.1 Hardness gap

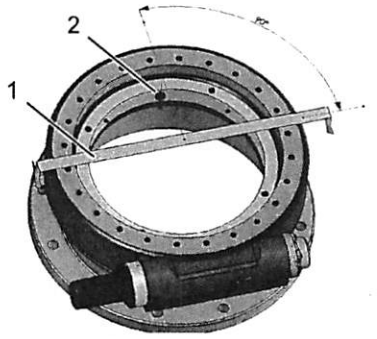

Fig. 19: Hardness gap marking

The hardness gap occurs with the raceway hardening and is located between the end and the beginning of the hardening.
For the WD-L series the hardness gap must be arranged with an offset by 90° relative to the main load-carrying zone. The hardness gap is marked by a filling plug or a stamped "S".

1 Main load-carrying zone
2 Filling plug or S-mark

5.3.2 Positioning the slew drive

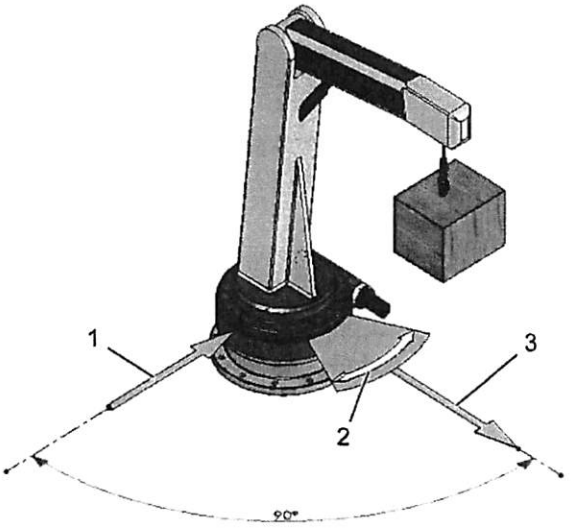

Fig. 20: Main load-carrying zone

1 Hardness gap
2 Main slewing range
3 Main load-carrying zone

1. Determine the main load-carrying zone.
The main load-carrying zone is that area of the slewing ring that is subject to the highest load, taking all aggressive forces and torques, and all occurring load cases into account.

2. Arrange the hardness gap (⇨ section 5.3.1 "Hardness gap") of the bearing ring charged with point load so that it is offset by 90° relative to the main load-carrying zone. The main load-carrying zone is in the main slewing range.

CAUTION! **The hardness gap or the filling plug in a slewing ring constitute a zone of decreased load-carrying capacity. The service-life of the slew drive will be reduced significantly, if the hardness gap is in the main slewing range. Fracture of bearing ring for example may cause slew drive failure. Consequently place this marked point in a reduced load zone if possible.**

3. Use a feeler gauge to check whether the support surface of the slew drive is completely supported by the mounting structure. If this is not the case, the support surface of the mounting structure must be reworked (⇨ section 5.2.3 "Determining flatness deviation, and perpendicularity deviation and deformation").

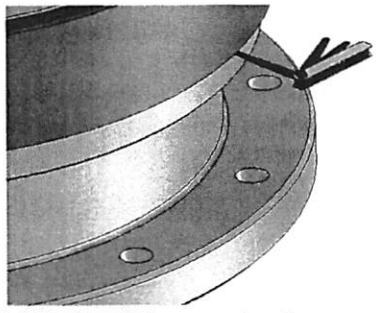

Fig. 21: Check the support surface

5.3.3 Bolting the slew drive

⚠WARNING

Do not use impact screwdrivers. Using an impact screwdriver may cause impermissible deviations between the bolt tightening forces. Failure of the bolted union with the mounting structure may cause severe personal injury or material damage.

ⓘ Mount the slew drive in unstressed state.

Strictly comply with the procedure specified below to avoid impermissible deviations between the bolt tightening forces:

ⓘ First fasten the housing, then fasten the toothed bearing ring!

1. Lightly oil the bolt thread (not when using bolt locking devices with adhesive).
2. Pretension the bolts, with washers if required, crosswise in 3 steps, 30%, 80%, and 100% of the tightening torque, or the hydraulically applied pretension force.
3. In this process turn the unscrewed ring several times. Repeat the procedure for the bearing ring that has not yet been bolted.

If using a hydraulic bolt-tensioning cylinder the tensioning forces for the bolt pretension should not exceed 90% of yield strength (⇨ Tab. 10 and 11).

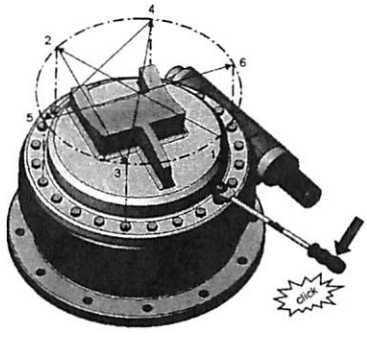

Fig. 22: Tighten crosswise

The end customer or the operating company must be instructed which tightening process was used. The process must also be used when servicing the unit to check the bolted union.

Tightening torque M_A in Nm with incremental tightening

Mounting bolt dimensions	Step 1 30%	Step 2 80%	Step 3 100%
	Tightening torque M_A in Nm Strength class 10.9		
M6	3.50	9.20	11.5
M8	8.40	22.4	28.0
M10	16.7	44.6	55.8
M12	29.3	78.2	97.7
M16	73.8	197	246
M20	144	385	481
M24	249	664	830
M30	498	1329	1661

Tab. 12

Tightening torque M_A in Nm with incremental tightening

Mounting bolt dimensions	Step 1 30%	Step 2 80%	Step 3 100%
	Tightening torque M_A in Nm Strength class SAE Grade 8		
1/4 - 20 UNC	3.50	9.30	11.6
5/16 - 18 UNC	7.30	19.4	24.3
3/8 - 16 UNC	13.1	34.9	43.6
7/16 - 14 UNC	21.1	56.2	70.2
5/8 - 11 UNC	64.4	172	215
3/4 - 10 UNC	115	308	385
7/8 - 9 UNC	187	498	622
1 1/8 - 7 UNC	397	1060	1324

Tab. 13

Tightening torque M_A in ft-lbs with incremental tightening

Mounting bolt dimensions	Step 1 30%	Step 2 80%	Step 3 100%
	Tightening torque M_A in ft-lbs Strength class 10.9		
M6	2.50	6.80	8.50
M8	6.20	16.5	20.7
M10	12.3	33.0	41.2
M12	21.6	57.6	72.0
M16	54.3	145	181
M20	107	284	355
M24	184	490	612
M30	368	980	1225

Tab. 14

Tightening torque M_A in ft-lbs with incremental tightening

Mounting bolt dimensions	Step 1 30%	Step 2 80%	Step 3 100%
	Tightening torque M_A in ft-lbs Strength class SAE Grade 8		
1/4 - 20 UNC	2.60	6.90	8.60
5/16 - 18 UNC	5.40	14.4	18.0
3/8 - 16 UNC	9.70	25.8	32.3
7/16 - 14 UNC	15.6	41.6	52.0
5/8 - 11 UNC	47.7	127	159
3/4 - 10 UNC	85.5	228	285
7/8 - 9 UNC	138	369	461
1 1/8 - 7 UNC	294	785	981

Tab. 15

5.3.4 Determining the tilting clearance

Tilting clearance increases as raceway system wear increases. To determine the increase in tilting clearance a basic measurement must be executed in installed status and prior to first-time operation. This is the only way to determine changes.

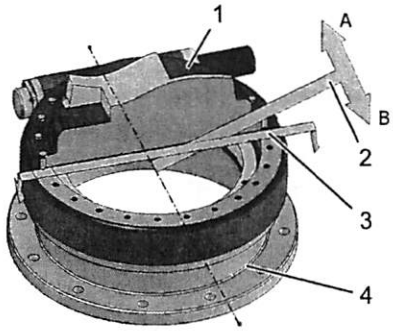

Fig. 23: Determine tilting clearance

1 Upper mounting structure
2 Tilting direction
3 Main load-carrying zone
4 Lower mounting structure

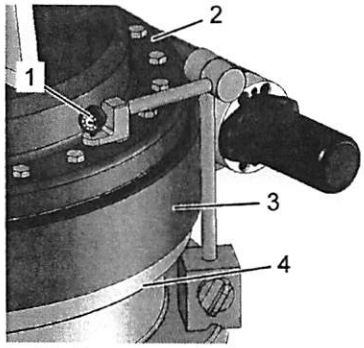

1 Dial gauge
2 Upper mounting structure
3 Slew Drive
4 Lower mounting structure

Fig. 24: Measurement setup

Procedure:

Tilting clearance measurement

1. Switch off the system and safeguard it from being turned on again.
2. Permanently mark the measuring point in the main load direction on the housing and on the bearing ring.
3. Attach the dial gauge as shown in Fig. 24.
4. Apply defined tilt torque, at least 50% of max. operating load, in direction "A".
5. Set dial gauge to zero.
6. Apply defined tilt torque, at least 50% of max. operating load, in direction "B".

↳ The displayed measured value m1 corresponds to the existing tilting clearance and serves as the base value that will be used for comparison in later inspections.

7. Log and document all measured values.

- All inspections at a later point in time must be executed on the same measuring point, with the same loads, at the same relative position of the bearing rings, and in the same sequence.
- At pure axial or radial load check the tilting clearance by applying an additional tilting load.

5.3.5 Determining the circumferential backlash

Toothing wear causes increased circumferential backlash. Consequently it is necessary to check circumferential backlash in accordance with the maintenance intervals (⇨ section 6.3 "Maintenance schedule").

IMPORTANT

Do not exceed the specified values for the circumferential backlash angle of the worm shaft (⇨ Tab. 18). Exceeding the specified values may result in failure of the slew drive and damage to the connecting components.

1. Switch off the system and safeguard it from being restarted.
2. Determine the measuring point in the main load-carrying zone, both on the housing as well as on the worm gear or on the toothed ring and permanently mark these points.

3. Remove the drive with the goal of ensuring that the worm shaft can be freely and easily moved by hand.
   - If using a front-end brake (flanged-mounted between motor and slew drive):
     - Remove front-end brake and motor (⇨ Operating manual for the front-end brake and motor).
   - If using a brake that is bolted to the slew drive opposite side of the motor:
     - Vent brake (⇨ Operating manual for the brake).
   - If using a permanent brake (series WD-L):
     - Remove brake (⇨ Operating manual for the permanent brake)
4. Determine the circumferential backlash angle of the worm shaft in the area in which the worm gear is meshed the majority of the time.

↳ The determined measured value serves as the comparison value for subsequent checks.

- Limit values, see section 6.4.3 "Checking the circumferential backlash".
- Log and document the measured values.
- All measurements at a later point in time must be performed on the same measuring point.

5.4 Function test

The slew drive must rotate uniformly. Deviations in the mounting structure as well as the influence of exterior loads can significantly affect the friction torque.

1. Turn the mounted slew drive several complete revolutions.
2. Check whether the slew drive turns uniformly and without jerking.
3. Perform additional test runs under full load.
4. After the function test, check the tightening torque of the mounting bolts.

6 Maintenance

Follow the instructions provided in the operating manuals for the drive motors (hydraulic or electric), as well as the instructions provided for the optional potentiometer or permanent brake.

6.1 Safety

⚠ DANGER

Prior to starting work switch off all energy supplies and safeguard them from being switched on again. When performing maintenance tasks there is danger of the energy supply being switched on without authorization. This poses a life-threatening hazard for persons in the danger zone.

⚠ WARNING

Prior to starting work ensure that there is adequate free space for installation. Ensure order and cleanliness at the installation location! Parts and tools that are lying loose or on top of each other are accident hazards! If components have been removed, ensure that they are properly re-installed, that all fastening elements are re-installed, and that all threaded connections are tightened with the specified torque. Improper maintenance may cause serious injury or property damage.

Personnel

- Only qualified, specialized personnel shall perform maintenance and inspection work.
- Only qualified electricians should perform work on the electrical equipment.

Personal protective equipment

Wear the following personal protective equipment for all maintenance work:

- Protective work clothing
- Protective gloves
- Safety footwear

Environmental protection

Comply with the following instructions for environmental protection when performing maintenance work:

- At all lubricating points where lubricant is applied by hand, remove escaping, used, or excess grease, and dispose of it in accordance with applicable local regulations.
- Collect hydraulic fluids and oils in suitable containers and dispose of these substances in accordance with applicable local regulations.

6.2 Cleaning

IMPORTANT

Use cold solvent (e.g. white spirit, diesel oil, Kaltryl KEV) that does not corrode the sealing material. Ensure that the cleaning agent does not get into the slew drive. Do not use a high-pressure cleaner to clean the slew drive. Unsuitable trichloroethylene-based or perchloroethylene-based cleaning agents, or other extremely aggressive cleaners damage the seal and may cause bearing damage.

Wear the following additional protective equipment for cleaning work:

Face protection
to protect the eyes and face from solvents.

Chemical-resistant protective gloves
to protect hands from aggressive substances.
Check protective gloves for leaks prior to use. Clean the gloves before pulling them off, store them in a well-ventilated location.

- When using cleaning agents, ensure adequate ventilation.
- Remove old grease, dust, and fouling with lint-free cloths.

6.3 Maintenance schedule

Maintenance tasks are described in the sections below that are required for optimal and trouble-free operation.

If increased wear is detected during regular inspections, then reduce the required maintenance intervals according to the actual indications of wear.

If you have questions concerning maintenance tasks and intervals, please contact our customer service (⇨ page 2).

Maintenance

Interval	Maintenance task	To be executed by
weekly	Check seal	Specialist
after 100 operating hours	Tighten bolts	Specialist
	Check tilting clearance	Specialist
after every additional 700 operating hours or at least every 6 months	Tighten bolts ■ Reduce the inspection interval if there is heavy wear or continuous operation.	Specialist
	Check tilting clearance ■ Reduce the inspection interval to 200 operating hours if the detected increase in tilting clearance is approximately 75% of the permissible tilting clearance increase. ■ After further increase reduce the interval between inspections to 50 - 100 hours.	Specialist
	Check circumferential backlash ■ Reduce the inspection interval to 200 operating hours if the detected increase in circumferential backlash is approximately 75% of the permissible circumferential backlash increase. ■ After further increase reduce the interval between inspections to 50 - 100 hours.	Specialist

Tab. 16

Lubrication

General re-lubrication of slew drives:
- After each cleaning
- Before and after longer periods of standstill, e.g. for cranes and construction machines during the winter months.

IMPORTANT

The main cause for slewing ring failure is inadequate lubrication. The lubrication intervals essentially depend on existing working and environmental conditions, as well as the version of the slew drive. Precise lubrication intervals can only be determined by tests under normal operating conditions.

If comparable results are not available, the following table can be used as a guide value:

Work conditions	Lubricating interval	To be executed by
Dry and clean workshop hall (rotary tables, robots, etc.)	Approx. every 300 operating hours, at least every 6 months	Specialist
Severe conditions on open terrain (cranes, excavators, etc.)	Approx. every 100 to 200 operating hours, at least every 4 months	Specialist
Aggressive climatic conditions, (ocean, desert, arctic climate, extremely polluted environment, ≥70 operating hours per week	Every 50 operating hours, at least every 2 months	Specialist
Extreme conditions (tunnel boring machines, steel works, wind turbines)	Continuous lubrication (through central lubrication or grease cups)	Specialist

Tab. 17

The specified values are valid for the following conditions:

- Operating temperature on the slew drive < 70° C (158° F).
- Circumferential speed < 0.5 m/s (1.64 ft/sec) for SP slew drives.
- Output speed < 5 rpm for WD slew drives.
- Low to moderate load.

Comply with the instructions in the operating manual provided by the manufacturer, for lubrication of optional intermediate gear units, brakes, and motors.
If necessary re-lubricate permanent brakes. For this only use the special grease SHELL RETINAX HDX2.

6.4 Maintenance tasks

6.4.1 Inspecting the mounting bolts

IMPORTANT

To compensate for settling, the bolts must be retightened with the prescribed tightening torque. Retightening must be executed without exerting additional external stress on the bolted union.

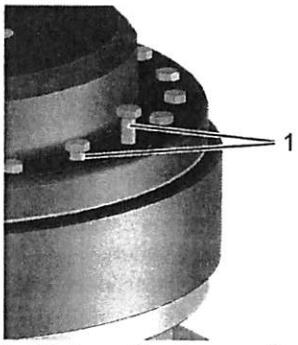

Fig. 25: Inspecting the mounting bolts

1 Detached bolt

Execution only by a specialist.

- Special tools required:
  - Torque wrench
  - Hydraulic clamping fixture
- Replace loose and detached bolts or nuts and washers with new bolts, nuts and washers.
- Use the same bolt size and bolt quality.

If a hydraulic clamping fixture was used to tighten the bolts, then a hydraulic clamping fixture must also be used to check the bolt pretension. Always use the same tightening procedure as specified for installation of the slew drive when checking the bolted union.

6.4.2 Checking the tilting clearance

Wear in the raceway system results in an increase in tilting clearance. Consequently it is necessary to check the tilting clearance in accordance with the maintenance intervals (⇨ section 6.3 "Maintenance schedule").

CAUTION! **If the maximum permissible tilting clearance increase is reached, then the system must be brought to a standstill and the slew drive must be replaced immediately, as safe operation can no longer be ensured.**

Checking the tilting clearance increase d_k directly on the slew drive

The measured value m1 determined at installation serves as the base value (⇨ section 5.3.4 "Determination of tilting clearance").

- Determine the value mx as described in the section 5.3.4 "Determining the tilting clearance".
- Subtract the base value m1 from the value mx determined in the inspection measurement:

$d_k = mx - m1 \leq d_k perm$

$d_k perm = 0.45$ mm

$d_k perm = 0.0177$ in

Checking the tilting clearance increase d_k but not directly on the slew drive

Proportionally convert the tilting clearance increase each time a measurement is taken (after the installation measurement) and compare with $d_k perm$.

6.4.3 Checking the circumferential backlash

⚠ CAUTION

Toothing wear causes increased circumferential backlash. When the maximum permissible circumferential backlash is reached, then the system must be brought to a standstill and the slew drive must be replaced immediately, as safe operation can no longer be ensured.

1. Determine the circumferential backlash in accordance with 5.3.5 "Determining the circumferential backlash".
2. Compare the determined value with the permissible values of the table.
   - See the type plate for the module specification.
   - For a module that is between the specified values, use the value for the smaller module.

Circumferential backlash angle limit values

Module of the toothing	Limit of circumferential backlash angle	Module of the toothing	Limit of circumferential backlash angle
3	34°	6	28°
4	32°	6/2 convolution	14°
4/2 convolution	16°	7	28°
4,5	31°	7/2 convolution	14°
5	30°	8	27°
5/2 convolution	15°	8/2 convolution	13.5°

Tab. 18

6.4.4 Lubricating the slew drive

IMPORTANT

Regularly lubricate the slew drives to prolong their service life and ensure safe operation.

IMPORTANT

Always use the lubricants specified in the order drawing. If using other lubricants pay attention to the relative mixability of the substances. The standard lubricants used are "r.tecc Norplex LKP2" from Rhenus, or the grease "Optimol Longtime PD0" from Castrol. If in doubt, or if there is no specification on the drawing, consult with our customer service (⇨ page 2). Using the wrong lubricant may cause damage to the slew drives and reduce the service life. In this case, any warranty shall be excluded. Comply with the instructions provided by the lubricant manufacturer!

If possible use a central lubrication system to lubricate the raceway system. In this regard ensure that the hoses are filled with grease at commissioning and that the storage tanks are regularly topped up with grease.

- An automatic re-lubricating system significantly facilitates re-lubrication for the raceway system and the toothing. Functional safety as well as wear behavior are improved.
- Comply with the instructions in the operating manual provided by the respective manufacturer for lubrication of optional intermediate gear units, brakes, and motors.
- If it is evident that moisture has penetrated into the slew drive, or has been absorbed by the grease, you must re-lubricate more intensively.

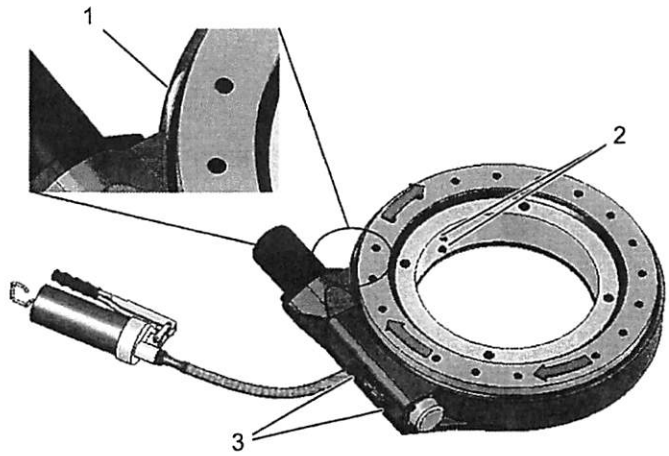

Fig. 26: Lubricating the slew drive

1 Fresh lubricant
2 Lubricating nipple, bearing ring
3 Lubricating ring housing

1. In succession, press grease into all lubricating nipples while simultaneously turning the slew drive all the way through, until a continuous collar of grease forms under at least one seal.
2. Ensure that old lubricant can escape without obstruction.

6.4.5 Inspecting the seals

IMPORTANT

Damaged seals must be replaced immediately. If there is corrosion damage or functional impairment as a consequence of damaged seals not being replaced at the proper time, any warranty shall be excluded. Penetrating moisture may quickly cause corrosion in the bearing ring and impairs safe operation. Note that the factory-installed seal only offers protection against dust and splashing water.

If damage is detected on a seal, contact the customer service organization without delay (⇨ page 2).

6.5 Measures after successful maintenance

Execute the following steps after concluding maintenance work and before switching the system on:

1. Check all previously loosened bolted unions for firm seat.
2. Ensure that all previously removed protective devices and covers have been properly installed.
3. Ensure that all tools, materials, and other equipment have/has been removed from the work area.
4. Clean the work area and remove any substances that may have escaped, such as liquids, processing material, or similar items.
5. Ensure that all system safety devices are again functioning properly!

7 Dismantling

At the end of the component's service life the component must be dismantled and disposed of in an environmentally responsible manner.

7.1 Safety

⚠ DANGER

Prior to starting work switch off all energy supplies and safeguard them from being switched on again. When performing maintenance tasks there is a danger of the energy supply being switched on without authorization. This poses a life-threatening hazard for persons in the danger zone.

⚠ WARNING

Prior to starting work ensure that there is adequate free space. Handle open, sharp-edged components carefully. Ensure order and cleanliness at the workstation! Parts and tools that are lying loose or on top of each other are accident hazards! Dismantle components properly. Pay attention to the high dead weight of some of the components. Use hoist equipment if necessary. Secure the components so that they do not fall down or fall over. There is an injury hazard if the device is not dismantled properly. Consult with the manufacturer if there are questions.

⚠ WARNING

Never position yourself under a suspended load! Swinging or falling parts may cause injury or life-threatening danger.

⚠ WARNING

Carefully supervise the lifting processes and transport. Only use the transport methods described here. A life-threatening crushing hazard exists if the components fall.

IMPORTANT

Proceed with caution when transporting objects! Comply with instruction symbols on the packages and only use the prescribed attachment points. Improper transport may cause significant damage.

IMPORTANT

Avoid impact when transporting! Improper transport may cause significant damage.

Personnel

- Only trained, specialized personnel should perform dismantling work.

7.2 Dismantling

Prior to dismantling:

- Switch off the system and safeguard it from being turned on again.
- Physically disconnect all energy supplies to the system, discharge stored residual energy.
- Remove fuels and auxiliary materials, as well as residual processing materials and dispose of these items in an environmentally responsible manner.

Then clean subassemblies and components properly and dismantle them, taking applicable local occupational safety and environmental protection guidelines into consideration.

1. Unscrew the fastening elements of the toothed bearing ring.
2. Remove the mounting structure.
3. Unscrew the mounting elements of the housing.
4. Remove the slew drive.

7.3 Disposal

IMPORTANT

Electrical scrap and electronic components, lubricants and other auxiliary materials are subject to treatment as special waste, and should only be disposed of by approved specialist companies! Improper disposal may cause environmental damage.

If a return or disposal agreement has not been concluded, then recycle dismantled components:

- Scrap metals.
- Recycle plastic elements.
- Sort and dispose of the remaining components in accordance with material condition

Local municipal authorities or specialized disposal companies provide information on environmentally responsible disposal.

8 Technical data – Type plate

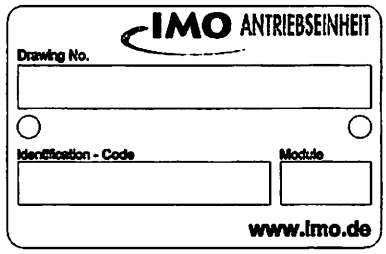

The type plate is on the housing and contains the following information:

- Manufacturer
- Drawing no./type
- Identification code consisting of:
  Order number, year of manufacture and consecutive number
- Module
- Web address

Fig. 27: Type plate

IMO Group of Companies

Plant I, Gremsdorf, Germany

Plant II, Gremsdorf, Germany

Plant III, Summerville, SC, USA

Headquarters Germany

Solutions in Machine and Plant Manufacturing
IMO Anlagenbau GmbH & Co. KG
Imostrasse 1
91350 Gremsdorf
Germany
Tel. +49 9193 6395-50
Fax +49 9193 6395-5140
anlagenbau@goimo.com

Slew Drives
IMO Antriebseinheit GmbH & Co. KG
Gewerbepark 16
91350 Gremsdorf
Germany
Tel. +49 9193 6395-20
Fax +49 9193 6395-2140
slew.drives@goimo.com

Slewing Rings for Renewable Energy
IMO Energy GmbH & Co. KG
Imostrasse 1
91350 Gremsdorf
Germany
Tel. +49 9193 6395-30
Fax +49 9193 6395-3140
energy@goimo.com

Slewing Rings
IMO Momentenlager GmbH & Co. KG
Imostrasse 1
91350 Gremsdorf
Germany
Tel. +49 9193 6395-40
Fax +49 9193 6395-4140
slewing.rings@goimo.com

Central Services
IMO Holding GmbH
Imostrasse 1
91350 Gremsdorf
Germany
Tel. +49 9193 6395-0
Fax +49 9193 6395-1140
holding@goimo.com

2.000/B0921/A/IO/2spr./Mrz10

China
Germany IMO Holding GmbH
Beijing Representative Office
Unit 502 & 505, 5th Floor
North Office Tower, Beijing Kerry Centre
1 Guang Hua Road, Chaoyang District
Beijing 100020
P.R. China
Tel. +86 10 85296463
china@goimo.com

USA
IMO USA Corp.
101 Innovation Drive
McQueen Park
Summerville, South Carolina 29483
USA
Tel. +1 843 291-2882
americas@goimo.com

All contact details of our global partners are to be found at: www.goimo.com

ASA 0115 12V DC (0.25 kW)

asahydraulik.com

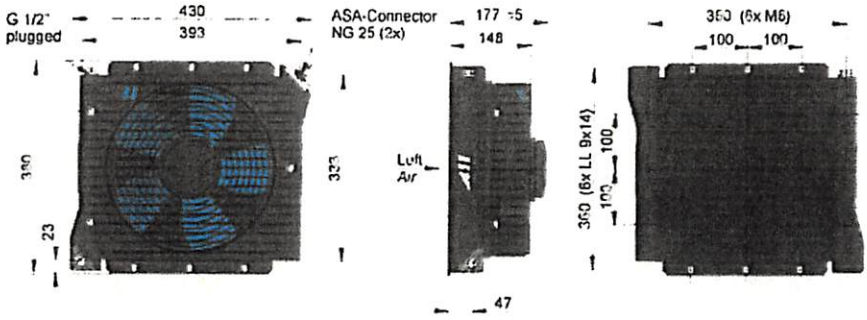

A:	-	J:	-
B:	-	K	-
C:	-	L:	-
D:	-	N:	-
G:	-	W:	-

Cooling Performance*

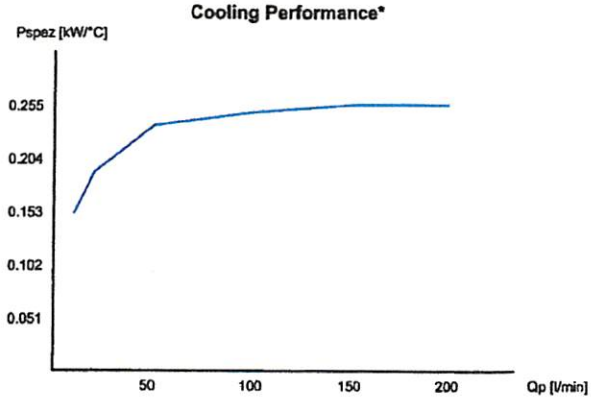

Pressure Drop

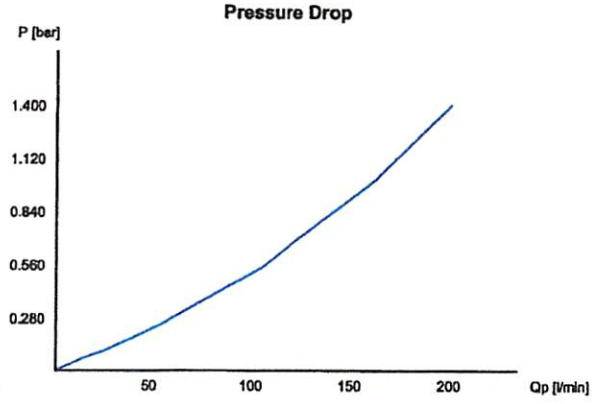

Order Number	Motor Power	Current	Protection Level	Rotation	Air Flow	Noise Level	Weight
ASA0115AD01	0.25 kW	15 A	IP 68	2850 1/min	0.62 kg/s	79 db(A)	12.3 kg

Working pressure (static): 26 bar (370 PSI)
Radiator material: Aluminium

Copyright 2011 asa hydraulik GmbH

Note – Cooling Performance

asahydraulik.com

The cooling performance mentioned in this homepage is conservative and measured at a test bench according to asa test procedures with oil type ISO VG 46 and presents a bases for your cooler selection regarding required cooling performance. Because there is no standard test procedure, tests used by other manufacturers might have different results. Due to different environment conditions the cooling performance can vary by +/- 15%.

Therefore we recommend all coolers be checked under the system operating conditions. This is also true for vibrations and mechanical stress as well as for pressure peaks and thermal stress.

General tolerance according to DIN 2768-g.

The information contained in this homepage is intended to be used as a guideline only. Customers should always confirm the suitability of the information and these products in their particular applications. ASA assumes no liability for any errors, commissions or misprints and reserves the right to change products and details without prior notification.As we are constantly improving our products, the characteristics, dimensions and weights can also change, although we do our best to incorporate these changes continually.

asa hydraulik GmbH
Prager Strasse 280
A-1210 Wien, Austria, Europe

Tel.: ++43 / 1 / 292 40 20
Fax: ++43 / 1 / 292 40 70

support@asahydraulik.com
www.asahydraulik.com

Copyright 2011 asa hydraulik GmbH

TWIN LINE HOSE REEL

PART# MEC-288

REPLACEMENT HOSES PART# HOSE-107

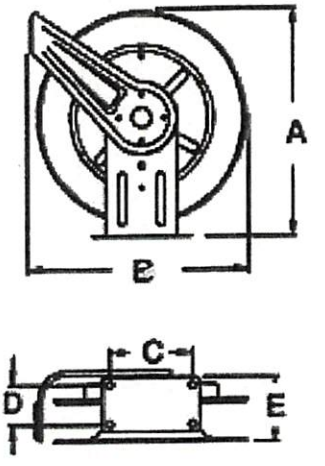

Series		THA6000
Weight		44.00 lb
Pressure		3000 psi 207 bar
I.D.		3/8 in
O.D.		0.640 in
Inlet (F) NPTF		3/8 in
Outlet (F) NPTF		3/8 in
Hose Length		30 ft
Hose Included		No
Max. Temperature		210 °F 99 °C
A		20 1/4 in
B		19 in
C		7 13/16 in
E		7 in

Installation and Service Instructions

MICO

*Model Number	Repair Kit Number	*Model Number	Repair Kit Number	*Model Number	Repair Kit Number
12-460-065 (BF)	12-400-021	12-460-157 (BF)	12-400-009	12-460-189 (BF)	12-400-009
12-460-150 (HO)	12-400-024	12-460-175 (BF)	12-400-025	12-460-190 (HO)	12-400-012
12-460-151 (BF)	12-400-023	12-460-176 (HO)	12-400-012	12-460-191 (BF)	12-400-009
12-460-154 (HO)	12-400-024	12-460-184 (HO)	12-400-024	12-460-193 (BF)	12-400-021

HO - Hydraulic Oil BF - Brake Fluid

* NOTE: Complete units consist of pedal and actuator, slave cylinder and reservoir. See inside for more information on individual components. If your product number is not listed, please call MICO, Incorporated for information.

GENERAL

The customer must use proper installation procedures so as not to create any undo stress or adverse environmental exposure to the Throttle Control components. The customer must also approve, through testing, this device for use and performance on vehicle. This testing and approval must be completed before in-field service use.

MOUNTING

BASE PLATE AND PEDAL ASSEMBLY

1. Select a convenient mounting location on vehicle floor board, tow board, or firewall. Be sure that base plate and pedal assembly do not interfere with other vehicle components.
2. Using the base plate as a template, drill two 8.8 mm (11/32 in) diameter holes.

⚠ CAUTION

Observe vehicle manufacturer's recommendations or prohibitions before drilling.

3. Fasten base plate to mounting surface.
4. Attach actuator push rod to one of three threaded holes on pedal using screw and spacer provided. **NOTE: Spacer must fit between push rod and pedal.**

SLAVE CYLINDER

1. Mount slave cylinder in a convenient location close to carburetor, using a 1/4 inch screw or pin. **NOTE: Allow for pivotal movement of cylinder during application.**
2. Attach slave cylinder push rod to carburetor linkage. The push rod has standard 5/16-24 threads to accommodate available ball joints or clevises. **NOTE: Positioning of the slave cylinder will determine the desired maximum stroke of up to 60.3 mm (2.38 in). A bell crank may be used to give pull action if the push action is not suitable for your particular installation.**
3. We recommend 3.2-4.5 kgf (7-10 lb) of return spring force at the slave cylinder push rod. Without return force on the push rod, the control will not be responsive to command and ideal revs may be inconsistent.

RESERVOIR

1. Mount reservoir in a convenient location on the firewall.

⚠ CAUTION

Be sure reservoir is higher than the pedal actuator and the slave cylinder so fluid can be gravity fed into them.

PLUMBING

(Refer to Figures 1 & 2)

HYDRAULIC CONNECTIONS AND INSTALLATION TIPS

Standard 1/8 inch NPTF to 1/4 inch tube brass adaptor fittings may be used for all tubing connections. Copper, steel or plastic 1/4 inch tubing may be used for the hydraulic lines.

MINERAL BASED HYDRAULIC OIL SYSTEMS

When fluid line lengths become excessive, tubing I.D. should increase proportionately. If vehicle is subjected to low temperatures which could restrict the flow of fluid, we recommend the fluid be thinned by using a 50/50 mixture No. 1 fuel oil.

1. Connect slave to side port of pedal actuator.
2. Connect reservoir to end port of pedal actuator.

FIGURE 1

1 Unit Hook-up

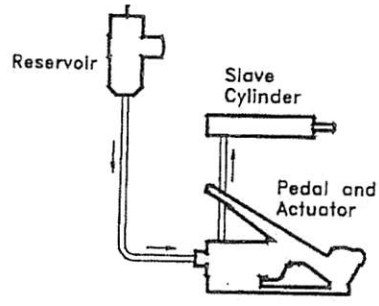

FIGURE 2

2 Unit Hook-up

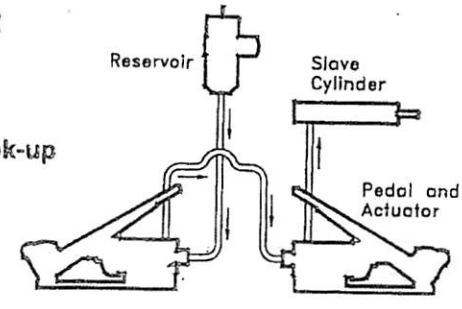

Model Number	Repair Kit Number	*Model Number	Repair Kit Number	*Model Number	Repair Kit Number
*12-460-003 (BF)	12-400-007	12-460-121 (BF)	12-400-021	12-460-170 (HO)	12-400-002
*12-460-006 (HO)	12-400-002	12-460-124 (HO)	12-400-002	12-460-183 (HO)	12-400-002
*12-460-064 (HO)	12-400-002	12-460-125 (BF)	12-400-007	12-460-185 (BF)	12-400-007
*12-460-067 (BF)	12-400-007	12-460-126 (HO)	12-400-002	12-460-186 (HO)	12-400-002

HO - Hydraulic Oil BF - Brake Fluid

* Actuator assembly only, no pedal or base

NOTE: If your product number is not listed, please call MICO, Incorporated for information.

FIGURE 3

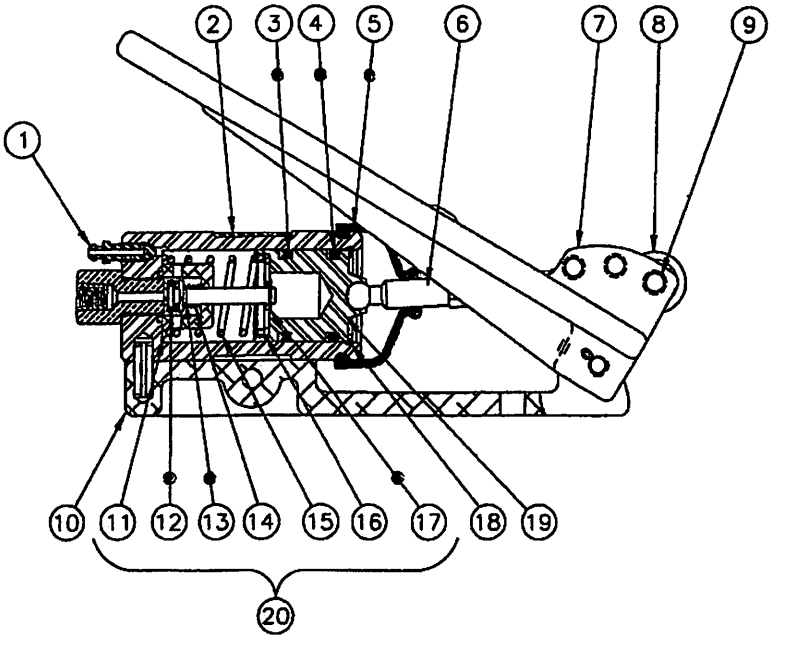

● Items included in Repair Kits

PEDAL ACTUATOR DISASSEMBLY

(Refer to Figure 3)

1. Disconnect necessary fluid lines.
2. Remove unit from vehicle by removing two mounting bolts.
3. Remove screw (9) and spacer that attaches pedal (7) to rod end (8).
4. Remove screw that attaches clamp (2) to base (10).
5. Remove bleeder screw (1) and drain fluid before starting disassembly.
6. Remove boot (5). Remove snap ring (18).
7. Pull push rod (6) and piston (19) out of actuator bore.
8. Remove cup (3) and o-ring (4) from piston (19).
9. Remove stem assembly (20) from actuator bore.

⚠ CAUTION

When removing cup and o-ring, be careful not to scratch or mar finished surfaces.

10. Remove snap ring (17) from stem (13).

⚠ CAUTION

Care must be taken when removing snap ring as it is under tension of spring (15).

11. Disassemble retainer (16), spring (15), retainer (11), stem (13) and spring (14).
12. Remove seat (12) from stem (13).

PEDAL ACTUATOR ASSEMBLY

(Refer to Figure 3)

1. Clean all parts thoroughly and allow to dry before reassembling.
2. Lubricate rubber components from repair kit in clean system fluid.
3. Install new seat (12) on stem (13).
4. Install spring (14) over stem (13) and insert into retainer (11). Note direction of retainer (11) and stem (13).
5. Slide spring (15) and retainer (16) over stem (13). Then install snap ring (17) on stem (13).
6. Install stem assembly (20) into actuator bore.
7. Install new o-ring (4) and new cup (3) on piston (19).
8. Insert piston (19) and push rod (6) into actuator bore, twisting slightly to avoid damaging seals.
9. Install snap ring (18). Install new boot (5).
10. Install actuator clamp (2) and attach with screw.
11. Align rod end (8) with pedal (7) and attach with screw (9) and spacer. **NOTE: Spacer must fit between push rod and pedal.**
12. Install actuator on vehicle. Connect fluid lines. Bleed system of air. Tighten fittings if leaks occur. Make several applications to be sure actuator is working correctly.

Model Number	Repair Kit Number
12-120-007 (BF)	12-100-009
12-120-010 (HO)	12-100-010
12-120-013 (BF)	*12-100-011
12-120-123 (BF)	*12-100-020

HO - Hydraulic Oil BF - Brake Fluid
* Also includes new boot and clamp
NOTE: If your product number is not listed, please call MICO, Incorporated for information.

● Items included in Repair Kits

FIGURE 4

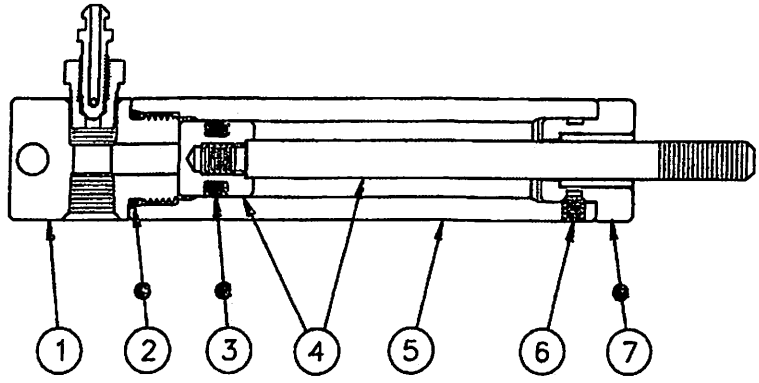

SLAVE CYLINDER DISASSEMBLY

(Refer to Figure 4)

1. Disconnect fluid line from slave cylinder inlet port. Plug line to prevent excess fluid loss.
2. Remove slave cylinder from vehicle.
3. Place slave cylinder in a soft jawed vise and remove end cap (1). Remove o-ring (2) from end cap.

⚠ CAUTION

Do not place slave cylinder in vise or any other tool that will damage housing.

4. Remove piston & push rod assembly (4) from housing (5).
5. Remove T-seal assembly (3) from piston end of assembly (4).

⚠ CAUTION

Care must be taken so as not to scratch piston when removing T-seal.

6. Remove the three set screws (6) which are holding end cap & bearing assembly (7) in housing (5).
7. Remove end cap & bearing assembly (7) from housing (5).

SLAVE CYLINDER ASSEMBLY

(Refer to Figure 4)

1. Clean all parts thoroughly and allow to dry before reassembling.
2. Lubricate rubber components from repair kit in clean system fluid.
3. Install new T-seal assembly (3) on piston & push rod assembly (4). Install one nylon back-up ring on each side of T-seal.

⚠ CAUTION

Be careful not to scratch piston when installing seal and back-up rings.

4. Slightly lubricate all of piston & push rod assembly (4) with clean system fluid and install into housing (5). **NOTE: To avoid damaging new T-seal assembly (3) install piston & push rod assembly into housing through end cap (1) end.**
5. Install new o-ring (2) on end cap (1) and install end cap in housing (5). Torque 20.3 N·m (15 lb·ft).
6. Install new end cap & bearing assembly (7) over push rod (4) and into housing (5). Install and tighten three set screws (6).
7. Install slave cylinder on vehicle. Connect linkage and fluid line.
8. Fill system reservoir with clean system fluid and bleed system until all air is removed. Tighten fittings if leaks occur.
9. Make several applications to be sure slave cylinder is working properly.

Model Number	Repair Kit Number
12-120-015 (BF)	12-100-013
12-120-016 (HO)	12-100-014
12-120-017 (BF)	12-100-013
12-120-020 (HO)	12-100-012
20-120-003 (BF)	12-100-015
20-120-004 (HO)	12-100-016

HO - Hydraulic Oil BF - Brake Fluid
NOTE: If your product number is not listed, please call MICO, Incorporated for information.

FIGURE 5

● Items included in Repair Kits

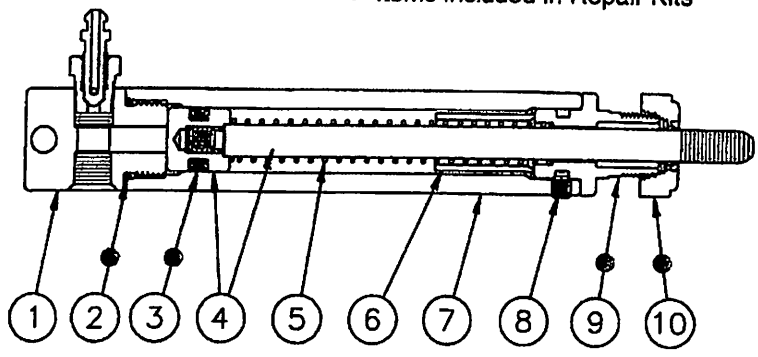

SLAVE CYLINDER DISASSEMBLY

(Refer to Figure 5)

1. Disconnect fluid line from slave cylinder inlet port. Plug line to prevent excess fluid loss.
2. Remove slave cylinder from vehicle.
3. Remove wiper seal (9) by threading off end of push rod (4). Note, not all cylinders use wiper seal.
4. Place slave cylinder in a soft jawed vice and remove end cap (1). Remove o-ring (2) from end cap.
5. Remove piston & push rod assembly (4), spring (5) and sleeve (6) from housing (7).
6. Remove T-seal assembly (3) from piston end of assembly (4).

⚠ CAUTION

Do not place slave cylinder in vise or any other tool that will damage housing.

7. Remove the three set screws (8) which are holding end cap & bearing assembly (9) in housing (7).

⚠ CAUTION

Care must be taken so as not to scratch piston when removing T-seal.

8. Remove end cap & bearing assembly (9) from housing (7).

SLAVE CYLINDER ASSEMBLY

(Refer to Figure 5)

1. Clean all parts thoroughly and allow to dry before reassembling.
2. Lubricate rubber components from repair kit in clean system fluid.
3. Install new T-seal assembly (3) on piston & push rod assembly (4). Install one nylon back-up ring on each side of T-seal.

⚠ CAUTION

Be careful not to scratch piston when installing seal and back-up rings.

4. Slightly lubricate all of piston & push rod assembly (4) with clean system fluid and install into housing (7). **NOTE: To avoid damaging new T-seal assembly (3) install piston & push rod assembly into housing through end cap (1) end.**
5. Install spring (5) and sleeve (6) over push rod end of (4) and slide into housing (7).
6. Install new o-ring (2) on end cap (1) and install end cap in housing (7). Torque 20.3 N·m (15 lb·ft).
7. Install new end cap & bearing assembly (9) over push rod (4) and into housing (7). Install and tighten three set screws (8).
8. Carefully install new wiper seal (10) by threading on end of push rod (4) and then threading on end cap (9). Note, not all cylinders use wiper seal.
9. Install slave cylinder on vehicle. Connect linkage and fluid line.
10. Fill system reservoir with clean system fluid and bleed system until all air is removed. Tighten fittings if leaks occur.
11. Make several applications to be sure slave cylinder is working properly.

Model Number	Repair Kit Number
12-120-115 (BF)	12-100-001
12-120-116 (HO)	12-100-004

HO - Hydraulic Oil BF - Brake Fluid

FIGURE 6

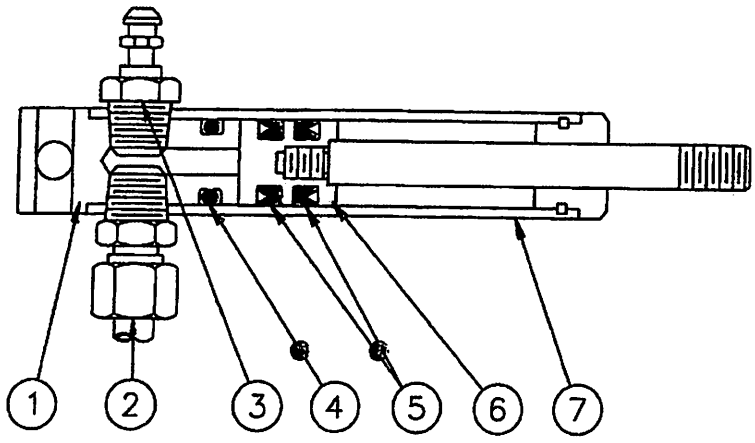

● Items included in Repair Kits

SLAVE CYLINDER DISASSEMBLY

(Refer to Figure 6)

1. Disconnect necessary fluid lines.
2. Remove tubing from inlet fitting (2). This may be plugged to prevent excessive fluid loss.
3. Remove unit from vehicle.
4. Remove bleeder screw assembly (3) and inlet fitting (2) from housing (7).

⚠ CAUTION

Do not place slave cylinder in vise or any other tool that will damage housing.

5. Remove end plug (1) from housing (7).
6. Remove push rod & piston assembly (6) from housing (33).
7. Remove cups (5) from push rod & piston assembly (6).
8. Remove o-ring (4) from end plug (1).

SLAVE CYLINDER ASSEMBLY

(Refer to Figure 6)

1. Clean all parts thoroughly and allow to dry before reassembling.
2. Lubricate rubber components from repair kit in clean system fluid.
3. Install new o-ring (4) on end plug (1).
4. Install new cups (5) on push rod & piston assembly (6). Note direction of cups.
5. Insert push rod & piston assembly into housing (7).

⚠ CAUTION

Do not allow cups to extrude up into the two 1/8-27 ports.

6. Insert end plug (1) into housing (7). Align bleeder screw assembly (3) and fitting holes.
7. Install bleeder screw assembly (3). Install inlet fitting (2).
8. Install unit on vehicle.
9. Connect fluid lines. Bleed system of air. Tighten fittings if leaks occur. Make several applications to be sure slave cylinder is working properly.

BLEEDING

GRAVITY BLEEDING

1. Fill system with proper fluid.

⚠ CAUTION

Models 12-460-175 & 12-460-151 are for brake fluid only and Models 12-460-176 & 12-460-150 are for hydraulic oil only. Never use mineral based hydraulic oil in a brake fluid system or brake fluid in a mineral based hydraulic oil system. If the wrong fluid is used, it will ruin the seals in the system.

2. Bleed pedal actuator at bleeder screw, then bleed slave cylinder at bleeder screw making sure all air is eliminated from the system.

PRESSURE BLEEDING

Depending on the routing of the connecting tubing, gravity bleeding may no be adequate. Therefore, pressure bleeding would be recommended.

1. Actuator must be at full pedal return position.
2. Set the pressure bleeder at approximately 1.38 bar (20 PSI).
3. Attach the bleeder hose connector to the reservoir.
4. Open both actuator and slave cylinder bleeder screws.
5. Open the bleeder valve.
6. When all air has been removed and clear system fluid is observed, close the actuator bleeder and then the slave cylinder bleeder.
7. Close pressure bleeder valve.
8. Remove bleeder.

MICO could not possibly know of and give advice with respect to all conceivable applications in which this product may be used and the possible hazards and/or results of each application. MICO has not undertaken any such wide evaluation. Therefore, anyone who uses an application which is not recommended by the manufacturer, first must completely satisfy himself that a danger will not be created by the application selected, or by the particular model of our product that is selected for the application.

MICO has made every attempt to present accurate information in catalogs, brochures and other printed material. MICO can accept no responsibility for errors from unintentional oversights that may exist. Due to a continuous program of product improvement, materials, specifications, and product documentation are subject to change without notice or obligation.

MICO is a registered trademark of MICO, Inc. MICO is registered in the U.S. Patent and Trademark Office as well as in Australia, Indonesia, Japan, Peoples Republic of China, South Korea, and the European Community.

MICO®

Innovative Braking and Controls Worldwide

MICO, Incorporated
1911 Lee Boulevard / North Mankato, MN U.S.A. 56003-2507
Tel: +1 507 625 6426 Fax: +1 507 625 3212

www.mico.com

Form No. 81-460-021 Revised 2006-07-10

MICO could not possibly know of and give advice with respect to all conceivable applications in which this product may be used and the possible hazards and/or results of each application. MICO has not undertaken any such wide evaluation. Therefore, anyone who uses an application which is not recommended by the manufacturer, first must completely satisfy himself that a danger will not be created by the application selected, or by the particular model of our product that is selected for the application.

MICO has made every attempt to present accurate information in catalogs, brochures and other printed material. MICO can accept no responsibility for errors from unintentional oversights that may exist. Due to a continuous program of product improvement, materials, specifications, and product documentation are subject to change without notice or obligation.

MICO is a registered trademark of MICO, Inc. MICO is registered in the U.S. Patent and Trademark Office as well as in Australia, Indonesia, Japan, Peoples Republic of China, South Korea, and the European Community.

MICO, Incorporated
1911 Lee Boulevard / North Mankato, MN U.S.A. 56003-2507
Tel: +1 507 625 6426 Fax: +1 507 625 3212
www.mico.com

Innovative Braking and Controls Worldwide

Form No. 81-460-021 Revised 2006-07-10

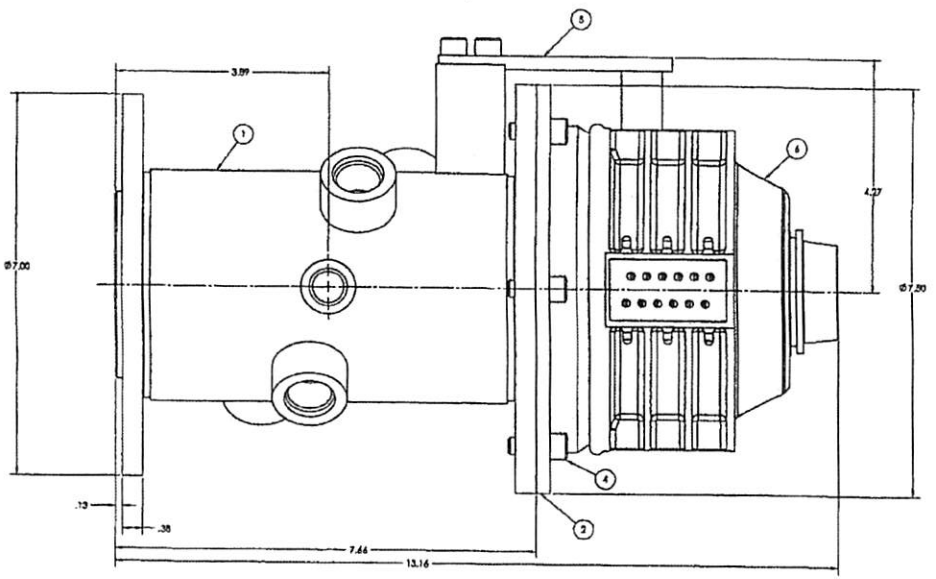

REVISIONS				
ECN	REV.	DESCRIPTION	DATE	APPROVED
1911	A	INITIAL RELEASE	9/20/2006	ERH
1978	B	REPLACED #6-32 SHCS W/ #6-32 SS FH SCREW	6/1/2007	ERH

NOTES:

1. SEE DRAWING 04-090 FOR HYDRAULIC SPECIFICATIONS.

SWIVEL INSTALLATION REQ'T

ONLY ONE MEMBER OF SWIVEL IS TO BE RIGIDLY MOUNTED TO THE EQUIPMENT OF INTENDED USE. OTHER MEMBER MUST BE ALLOWED TO "FLOAT" WITH ONLY ROTATION RESTRAINED. DO NOT SIDE LOAD SWIVEL!

HYDROMOTION SWIVEL WARRANTY

HYDROMOTION WARRANTS THE SWIVEL ASSEMBLY TO BE FREE OF DEFECTS FOR A PERIOD OF ONE YEAR FROM THE DATE OF SHIPMENT. HYDROMOTION WILL REPAIR, WITHOUT CHARGE, THE MALFUNCTIONING UNIT AT OUR FACTORY. THIS WARRANTY DOES NOT APPLY TO CONDITIONS RESULTING FROM IMPROPER INSTALLATION, MISHANDLING, MISUSE AND / OR CUSTOMER DAMAGE.

CAUTION: THE WIRING / WIRE HARNESSES ARE NOT INTENDED TO LIFT OR AID IN LIFTING THE SWIVEL INTO POSITION. USE OF THE SWIVEL WIRING IN THIS MANNER WILL RESULT IN DAMAGE TO THE SWIVEL.

NOTE: SERVICE OF ROTARY CONTACT ASSEMBLY SHOULD BE PERFORMED BY FACTORY PERSONNEL

ITEM NO.	QTY.	INVENTORY NO.	DESCRIPTION
6	1	40-1208	12-CIRCUIT SWIVEL
5	1	111674	TORQUE ARM
4	8	SHCS-188x.750	SHCS 8/16-18 x .75 LG
3	2	FHCS-188x.750	FHCS 8/16-18 x .75 LG
2	1	17769	ADAPTER, POWER PLATE
1	1	04-090	4- PORT ROTARY HYDRAULIC UNION

BILL OF MATERIAL

HYDROMOTION

4 PORT UNION w/ POWER PLATE

04-090-101

SCALE 1:1 SHEET 1 OF 1

Hydraulic oil filter assembly

Hydraulic filter and housing Part# HYD-110

Hydraulic filter Part# HYD-112

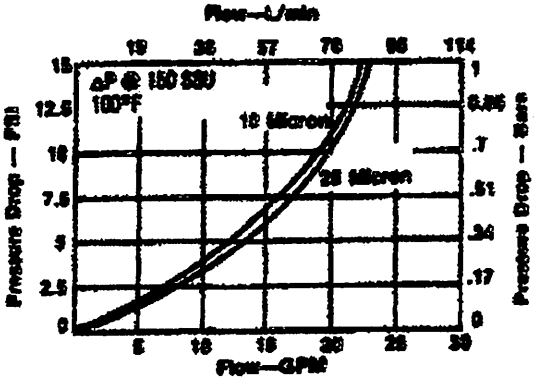

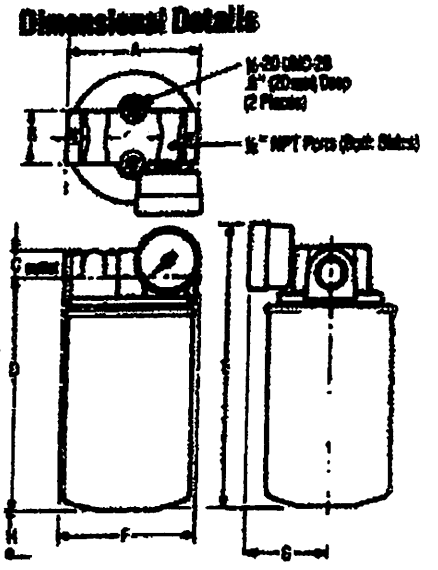

Sump Strainer

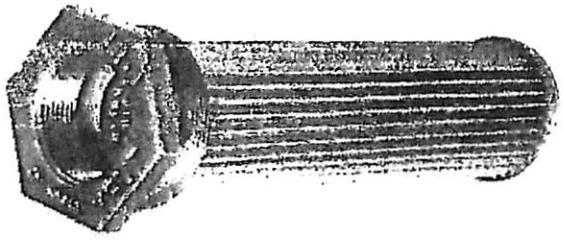

- Flow GPM
- 25
- Flow L/Min
- 95
- NPT Size Male Thread
- 2"
- NPT Size Outlet Port
- 1-1/4"
- Element Area
- 125 sq. in.
- A
- 9.01"
- B
- 2.00"
- Weight
- 1.10 lbs.

1 ¼" Bronze ball valve

For hydraulic tank

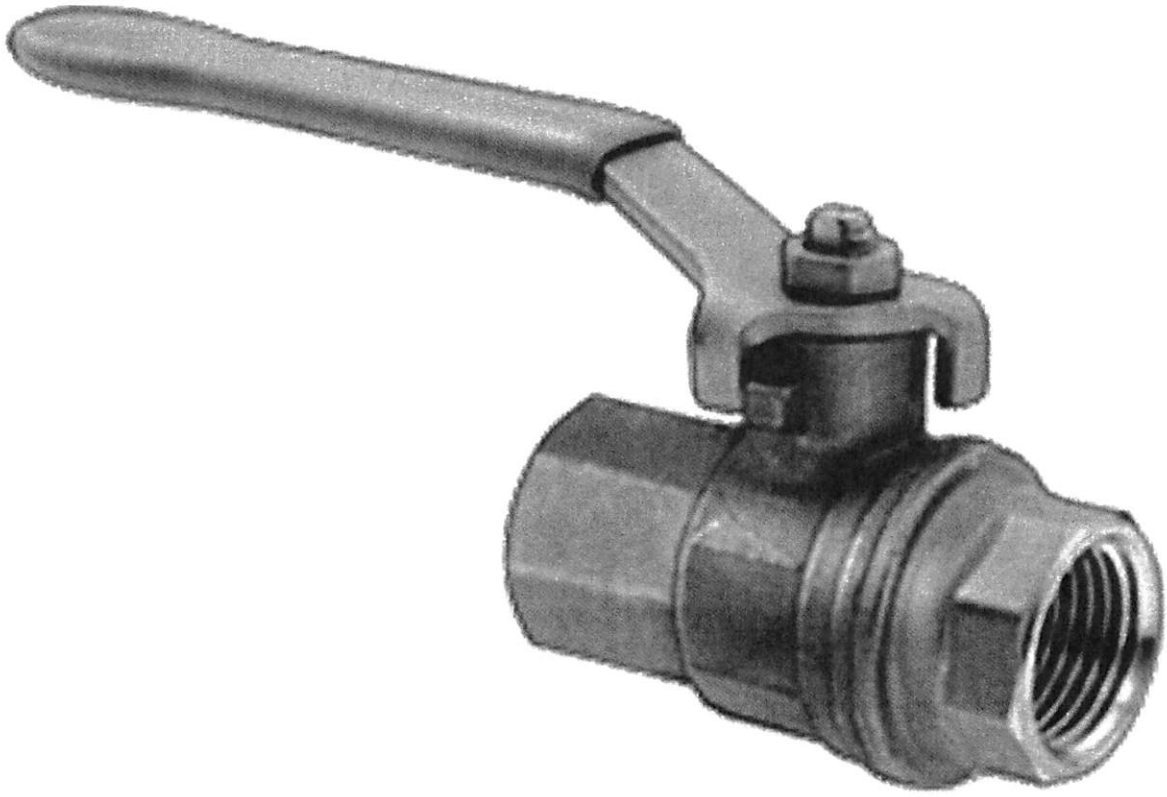

1 ¼" Bronze ball valve

For hydraulic tank

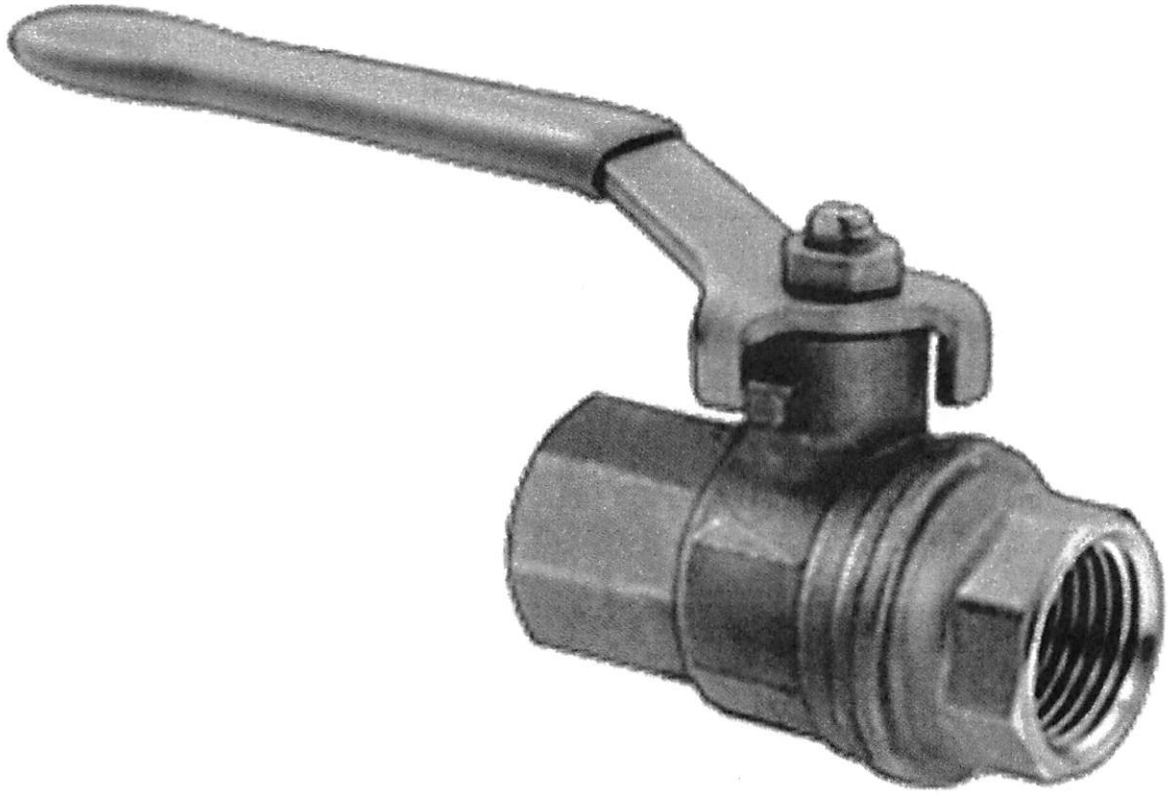

STANDARD

PAT1401
MANUAL TOOL

AM-DYN-IC FLUID POWER INC.

Inquiry No:		To:	Mike Brooks	Quoted By:	Gordon Ralph
Date:	28-Jan-13	Ph:	419-294-4985	Ph:	616-241-4695
Customer:	Ohio Power Systems	Fx:	419-297-9380	Fx:	616-241-4394
				E-mail:	gordon@adifp.com

PARKER PULSAR VALVE SPECIFICATION SHEET:

CUSTOMER:	Ohio Power Systems	RELIEF/COMP SETTING:	
APPLICATION:	PATRIOT	PUMP TYPE:	
CUST. P/N:		PUMP FLOW:	

INLET TYPE:		INLET PRESSURE RELIEF SETTING:	REMARKS:
Bypass Inlet	VBL2211-2904	2900	

SEGMENT FUNCTION	SEGMENT POSITION	Model Code	FLOW PATH	C1 FLOW (GPM)	C2FLOW (GPM)	COIL VOLTAGE	PRESSURE LIMITER C1 (PSI)	PRESSURE LIMITER C2(PSI)	OPTION C1 (PSI)	RELIEF C2 (PSI)	NOTES/COMMENTS
Boom up/down	1st	VPL4247-4487-00OO	CC	7	7	12	1800	3000			75 Hz Prop. Coil,12VDC,
Boom in/out	2nd	VPL4247-4287-00OO	CC	7	7	12					75 Hz Prop. Coil,12VDC,
Boom in/out	3rd	VPL4247-4287-00OO	CC	7	7	12					75 Hz Prop. Coil,12VDC,
Boom Rotate	4th	VPL3247-4387-00OO	CC	4	4	12	1600	1600			75 Hz Prop. Coil,12VDC,
Auger/Winch	5th	VPL6247-4287-00OO	CC	17	17	12					75 Hz Prop. Coil,12VDC,
Jib/Pole Guide	6th	VPL4247-4487-00OO	CC	7	7	12					75 Hz Prop. Coil,12VDC,
Tool Circuit	7th	VNL424A-0387-00OO	CC	7	7	12	2000	2000			Manual Only
											Weather Pack connector
											Close Center Spools
											Individual spool Compensator
											9-inch Handles

OUTLET TYPE:	Non Ported	OUTLET PART#:	VOL0001-0704	VOLOK4 & VAL7K1	Remarks: No Load sense ball on outlet; plumb ports

AUTHOR(S): Gordon Date: 1/28/2013

Assembly Number
VAL1710-2904-75HzREV7

7/11/2013 - Changed Boom Rotate C1/C2 from 800 to 1600 per Norm

VALVE ASSEMBLY PRICE: _____

Bulletin HY14-2101-M1/US
Assembly/Adjustment Guide

Series VPL Proportional Valves

Effective: September 1, 2002
Supersedes: Cat. No. PMF 1028 dated 3/98

Pulsar™ Stackable Valves

⚠ WARNING

FAILURE OR IMPROPER SELECTION OR IMPROPER USE OF THE PRODUCTS AND/OR SYSTEMS DESCRIBED HEREIN OR RELATED ITEMS CAN CAUSE DEATH, PERSONAL INJURY AND PROPERTY DAMAGE

This document and other information from Parker Hannifin Corporation, its subsidiaries and authorized distributors provide product and/or system options for further investigation by users having technical expertise. It is important that you analyze all aspects of your application and review the information concerning the product or system in the current product catalog. Due to the variety of operating conditions and applications for these products or systems, the user, through its own analysis and testing, is solely responsible for making the final selection of the products and systems and assuring that all performance, safety and warning requirements of the application are met.

The products described herein, including without limitation, product features, specifications, designs, availability and pricing, are subject to change by Parker Hannifin Corporation and its subsidiaries at any time without notice.

Offer of Sale

The items described in this document are hereby offered for sale by Parker Hannifin Corporation, its subsidiaries or its authorized distributors. This offer and its acceptance are governed by the provisions stated in the "Offer of Sale".

© Copyright 2002, Parker Hannifin Corporation, All Rights Reserved

Parker Hannifin Corporation
Hydraulic Valve Division
Elyria, Ohio, USA

Introduction

"PULSAR™ VPL Series Valve Assembly and Adjustment Instructions" is furnished to assist in the process of taking this product line from the shelf to customer. Primarily, this process consists of stacking the valve, installing the selected options and making final adjustments. Ample page margin is provided for related notes.

Parker recommends performing these procedures in the order in which presented. Assembly drawings for the VPL Series work segment and the VBL Series pressure compensated inlet are included for reference.

	Page
VALVE STACK ASSEMBLY	1
SEGMENT ALTERATIONS	3
Main Spool Replacement	3
Pulsar™ Solenoid Replacement	4
Pulsar™ Solenoid Removal and Plug	5
Work Port Option Exchange	5
RECOMMENDED TEST STAND	6
Specifications	6
Suggested Test Stand Configuration (Figure 1)	7
Section Valve Spool Connections To Test Stand (Figure 2)	8
FINAL STACK ADJUSTMENTS	9
Bypass/Relief Inlet Adjustment	9
Individual Segment Pressure Compensator Adjustment	9
Flow Limiter Adjustment	12
Pressure Limiter Adjustment	14
ASSEMBLY DRAWINGS	15
VBL Bypass Inlet Segment	15
VPL Work Segment	16

As in any assembly procedure, it is beneficial to anticipate the final needs of the included segments and valve stack to avoid unnecessary steps.

Additional useful assembly tools/supplies:

- O-ring pick
- pencil magnet
- torque wrench, 50 Lb-ft (68 Nm) (Minimum) with socket set
- manual override subassembly, VPLH6K2
- clean, light-weight hydraulic oil
- white lithium grease
- allen wrench set
- open end wrench set

VALVE STACK ASSEMBLY

General

1. Assembly of a VPL Series valve stack requires the following parts or kits:
   - one (1) inlet section
   - one (1) stacking plate (VOL Series Kit)
   - correct number of work segments and accompanying spool kits
   - the tie rod kit corresponding with the number of sections, shown as "#", to be stacked (VAL#K1)
2. Have on hand:
   - clean, flat work area
   - one (1) manual override handle subassembly (VPLH6K2)
   - white lithium grease and a small, clean brush
   - clean, light weight hydraulic oil
   - 50 Lb-ft (68 Nm) (Minimum) torque wrench, with 9/16" socket.

Assembly Procedure

Inlet

1. Thread the three (3) large nuts from the tie rod kit onto each tie rod. Install tie rods through inlet with two (2) of the tie rods through both the inlet bracket and inlet. Lay inlet on a flat work area so the tie rods are vertical.
2. Be sure the surface of the inlet section is clean and free of any foreign material.

IMPORTANT!! A shuttle ball is not installed between the inlet and first working segment.

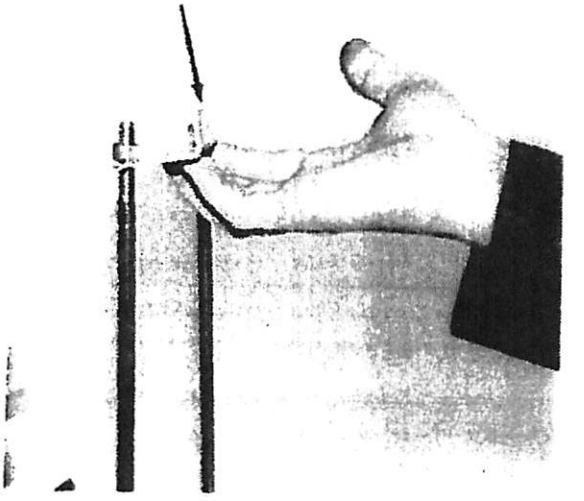

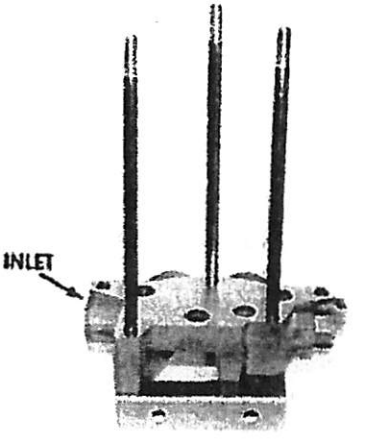

Work Segment

3. Prepare work segments for installation by verifying that all mating surfaces are clean and free of foreign material. Slide the segment over the tie rods, taking care not to allow the tie rods to damage the surface of the segment. Install a shuttle ball, that is included in the VAL#K1 tie rod kit. If stack is being assembled in horizontal position, grease will be required in shuttle ball seat area. (Field Service).

IMPORTANT!! Shuttle ball is installed if: Another work segment is NEXT to be installed,

- OR -

the stacking plate section to FOLLOW is machined with a load sensing seat and shuttle port is to be plumbed with downstream load sensing logic.*

4. Repeat step 3 for additional spool sections.

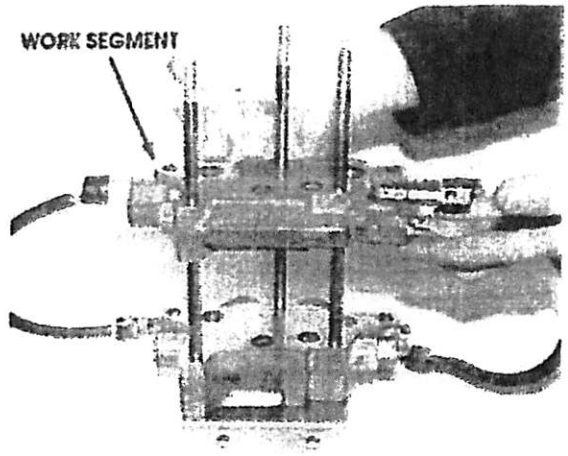

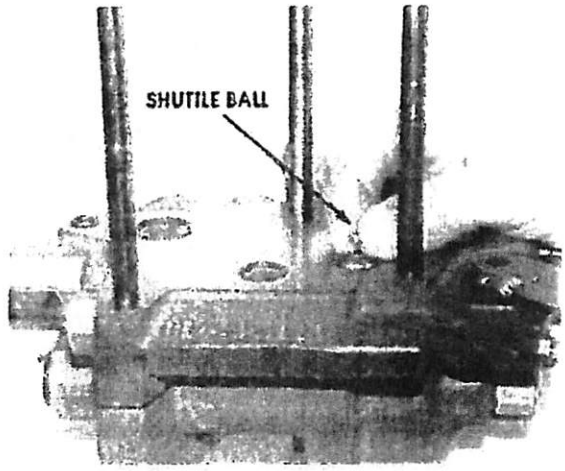

Stacking Plate

5. Carefully install the stacking plate section.
6. Install the outlet bracket over the lower two (2) tie rods; then thread the three (3) large nuts from the tie rod kit onto the tie rods and hand tighten. Carefully lay the valve on the mounting brackets. Torque the nuts to 15-20 Lb-ft (20-27 Nm).
7. Thread all six (6) small nuts onto tie rods three (3) on inlet three (3) on outlet. Torque to 15-20 Lb-ft (20-27 Nm) while holding the large nut underneath it with a 9/16" open end wrench.
8. Based upon the part number ordered each packaged stacking plate comes configured for either an internal or external pilot drain. However during assembly it may be converted to the other configuration as described in the accompanying Product Advisory No. 041.
9. Install manual handle or 1/2" (11/32")** open end wrench and shift each spool. Check that each spool operates freely in both directions.

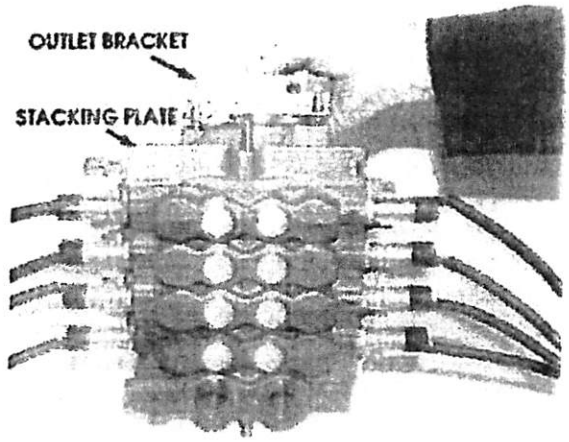

* *Shuttle balls are installed* ***between all*** *work segments and between the last work segment and stacking plate* ***only*** *if load sensing is to be continued from downstream valves.*

** Tool measurements in brackets are for the VPL 123 Series

Main Spool Replacement

General

The main spool may be one of two types: proportional or "on/off." The main spool determines the segment type. Therefore, to change flow rates drastically, or to change from proportional to "on/off" operation, it is the main spool which needs to be exchanged.

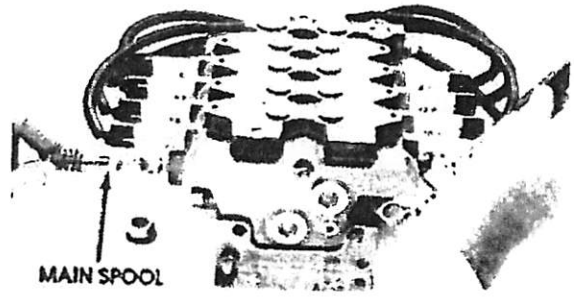

Main Spool Replacement Procedure

1. Remove the hex head plug (item 35) from the end of the work segment with a 1" socket. Install a manual override handle or use an open-end 1/2" (11/32")** wrench, and bias the handle toward the valve. Do not move the handle hard or fast, for this will cause the linkage to hit the spool bore edge and raise a burr. The flow limiter on the bottom may have to be backed out to allow for rotation. Use care to pull the spool out as straight as possible, as side forces may damage the spool and/or bore.
2. Unpack the new spool assembly. Check that the spool is marked with the same number as shown on the packing. (Example: VPL624K2 on the packing should show #624 on the spool.) Using a hard Arkansas stone, lightly "stone" the spool surface to remove minor nicks and burrs.
3. Make sure the new spool assembly is clean and free of any foreign material. Coat the spool with a thin layer of clean hydraulic oil. With valve stack resting on the mounting brackets, slowly rotate the override handle fully toward the valve. Linkage ball will raise a burr on the edge of the spool bore if contact is made. Carefully slide the spool straight into the bore with the spool hook slot facing downward. Again, exercise caution regarding placing a side load on the spool. Slide the spool in until it contacts the override linkage, then rotate the handle downward, thus pulling the spool the rest of the way into the bore. By slightly rotating the manual override back and forth, it is possible to check for proper installation. Stroke valve handle back and forth, feeling for any binding of spool to bore.

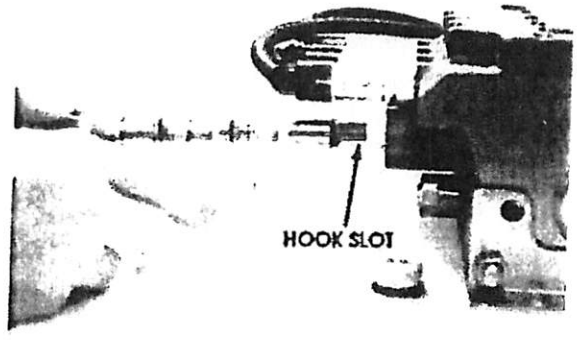

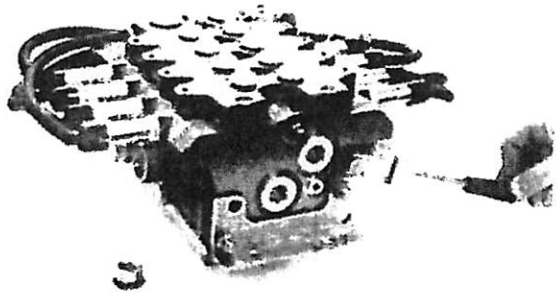

** Tool measurements in brackets are for the VPL 123 Series

4. Install the hex head plug back into the end of the segment. Torque to 15-20 Lb-ft (20-27 Nm). Use the manual override handle or an open-end 1/2" (11/32")** wrench to fully shift the spool in both directions. Spool movement should be free of binding and capable of returning with spring force only. Electrically cycle both Pulsar™ solenoids approximately 10 times for each time the spool is replaced.
5. Check flow for proper flow rate. Re-shim compensator if required using procedure shown on page 12.

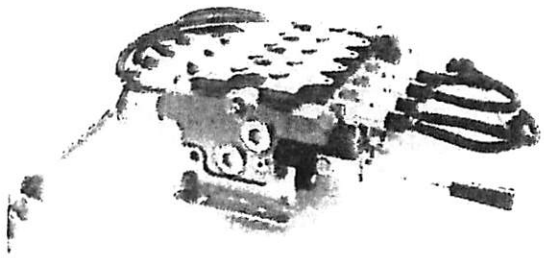

PULSAR™ Solenoid Replacement

General

All individual Pulsar solenoids supplied as service parts provide proportional control to the main spool. Should it be necessary to replace a solenoid the following procedure applies:

1. Remove the used solenoid.
2. Use a pick to remove the O-ring from the bottom of the cavity if original solenoid doesn't have the O-ring attached to the lower body.
3. All Pulsar solenoids are performance tested, marked and bagged. Therefore, the new parts may be installed directly from the bag.
4. Insert the new O-ring if in bag, making sure it is properly seated.
5. Install the new solenoid with a maximum torque of 6.5 Ft-Lbs.

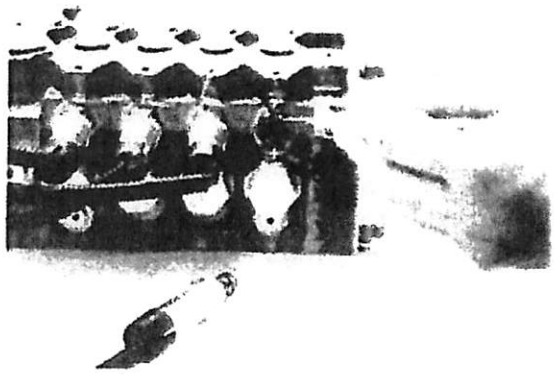

NOTE: Valve service procedures except those previously described should only be performed by authorized personnel or under factory supervision.

Effective 11/96, all Pulsars are manufactured with lower O-ring attached to the lower body.

PULSAR™ Solenoid Removal and Plug

General

For applications requiring only 2 position operation, only one PULSAR™ solenoid cartridge is required. Therefore, it is necessary to remove one cartridge, and plug the remaining cavity. Unless otherwise specified, VPL Series valves direct flow to the C_1 cylinder port.

Procedure

1. Remove the existing C_2 solenoid cartridge.
2. Remove the included O-ring with the O-ring pick. As needed, use a clean pencil magnet to remove the orifice disk in the bottom of the cavity, if removing the old design PULSAR™.
3. Unpack the solenoid plug kit (VNPK1) and verify the assembly contents: two (2) solenoid plugs, four (4) O-rings.
4. Install the solenoid plug (item 37) using 6.5 Lb-ft (9 Nm) torque.

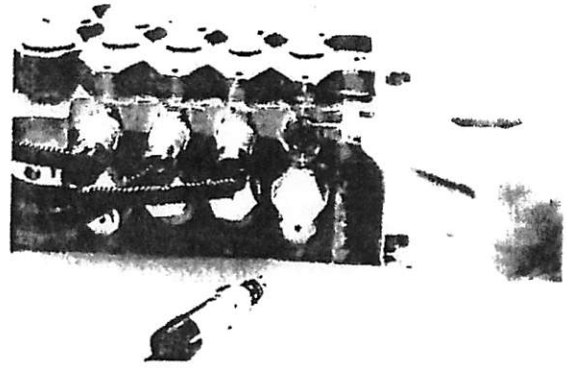

C_1 PORT

Work Port Option Exchange

General

The work segments may have options for the work ports: anti-cavitation check valve, relief with anti-cavitation, and defeat plug.

Replacement or Exchange Procedure

1. Remove the check valve plug (item 38) from either C_1 or C_2 option port on top of the working segment. A 7/8" socket wrench is required.

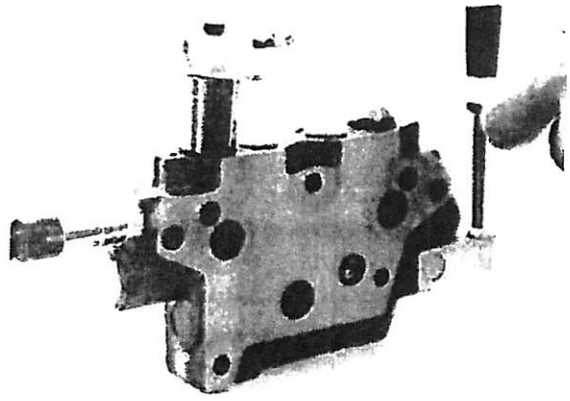

CHECK SPRING

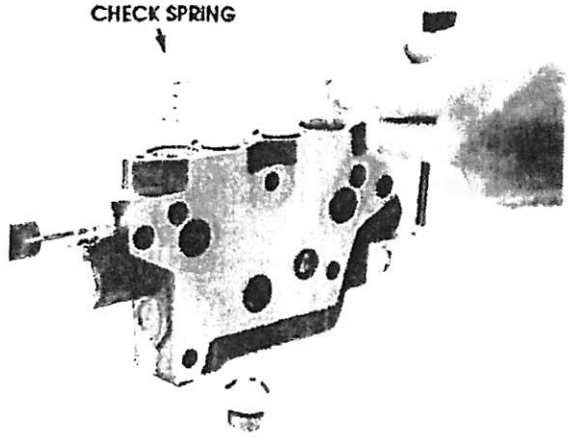

2. Pull the spring (item 42) out of the cavity. Either the 1/2" ball (item 41) or a relief cartridge (item 39) (VPLRA*KP) will be found under the spring.
3. Now either an exchange for a different setting or a change to a different option can be made. Reinstall the check valve plug (item 38) to 40 Lb-ft (54 Nm).

Specifications

Hydraulic Oil — Parker recommends petroleum-based hydraulic oil having 150 SUS (32 cST) viscosity at 100°F (38°C).

Filtration Level — 10 micron high pressure non-bypass.

Temperature Range — Test to be conducted from 100 to 120°F (38°C - 49°C).

Pressure Range & Measurement — Test stand pump controls and plumbing capable of producing and withstanding pressures from 50 psi - 5000 psi (3.5 bar - 350 bar).

Flow Range — Test stand fixed displacement pump (with bypass inlet included) controls and plumbing to produce and accommodate flow rates of up to 30 GPM (105 L/min.).

Flow measurement — Flow meter capable of measuring 0.1 to 30 GPM (0.4 - 105 L/min.) with acceptable accuracy.

Electrical Solenoid Control —

- Power supply of 12 VDC and 24 VDC with negative voltage spike suppression from -10 to -20 VDC for 12 VDC. For 24 VDC (-20 to -36 VDC).
- Pulse-width modulated frequency output of 33 Hz.
- Recommend using Parker 12 VDC MC3100-0036 power module or 24 VDC MC3202-0111 power module.

Configuration

The test stand arrangement shown (FIGURE 1 and 2) is suggested. Parker recognizes the variety in test facilities of its distributorships. Consequently, it is expected each distributorship will configure a suitable test facility to satisfy requirements of both product qualification and individual needs.

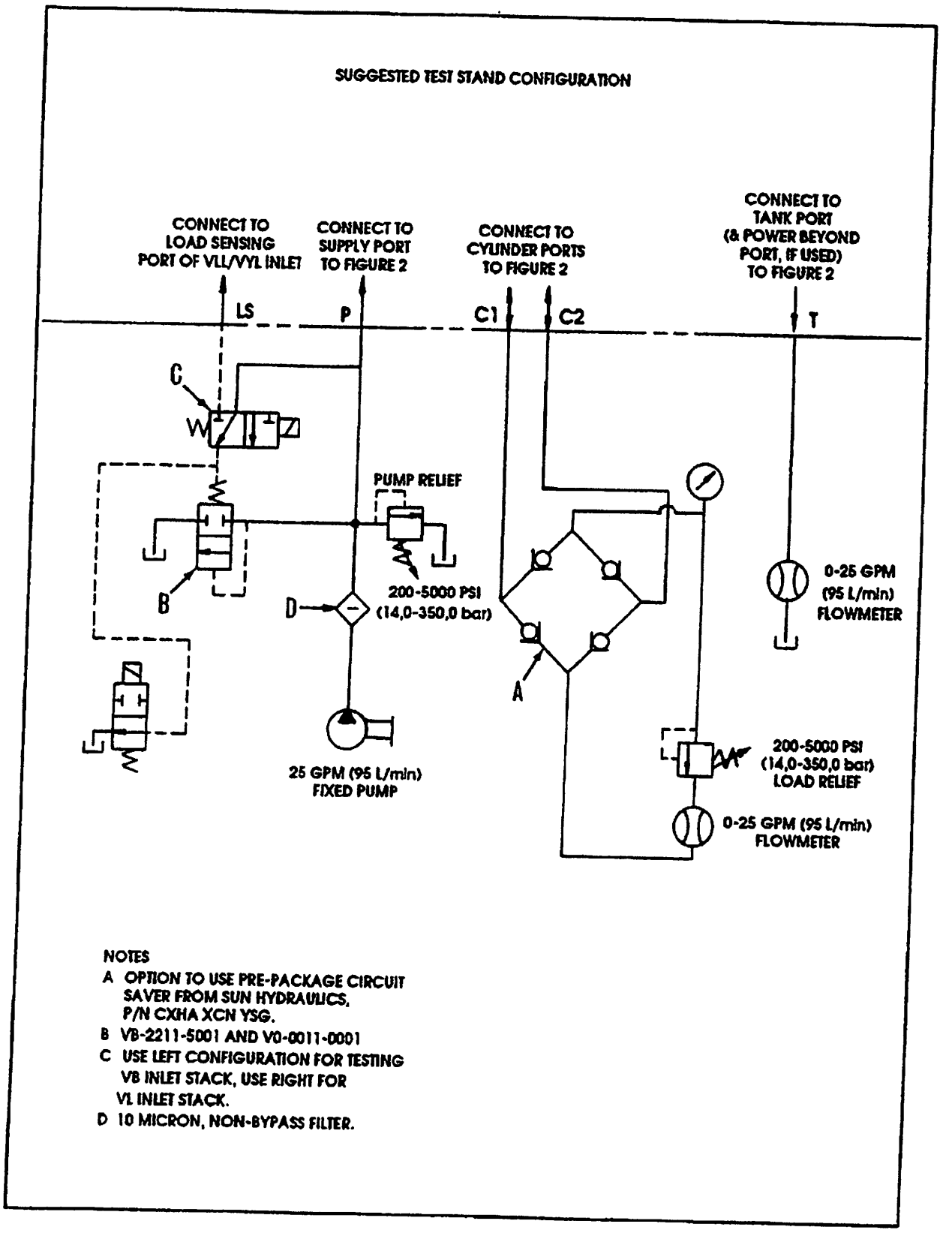

NOTES

A OPTION TO USE PRE-PACKAGE CIRCUIT SAVER FROM SUN HYDRAULICS, P/N CXHA XCN YSG.

B VB-2211-5001 AND V0-0011-0001

C USE LEFT CONFIGURATION FOR TESTING VB INLET STACK, USE RIGHT FOR VL INLET STACK.

D 10 MICRON, NON-BYPASS FILTER.

FIGURE 1

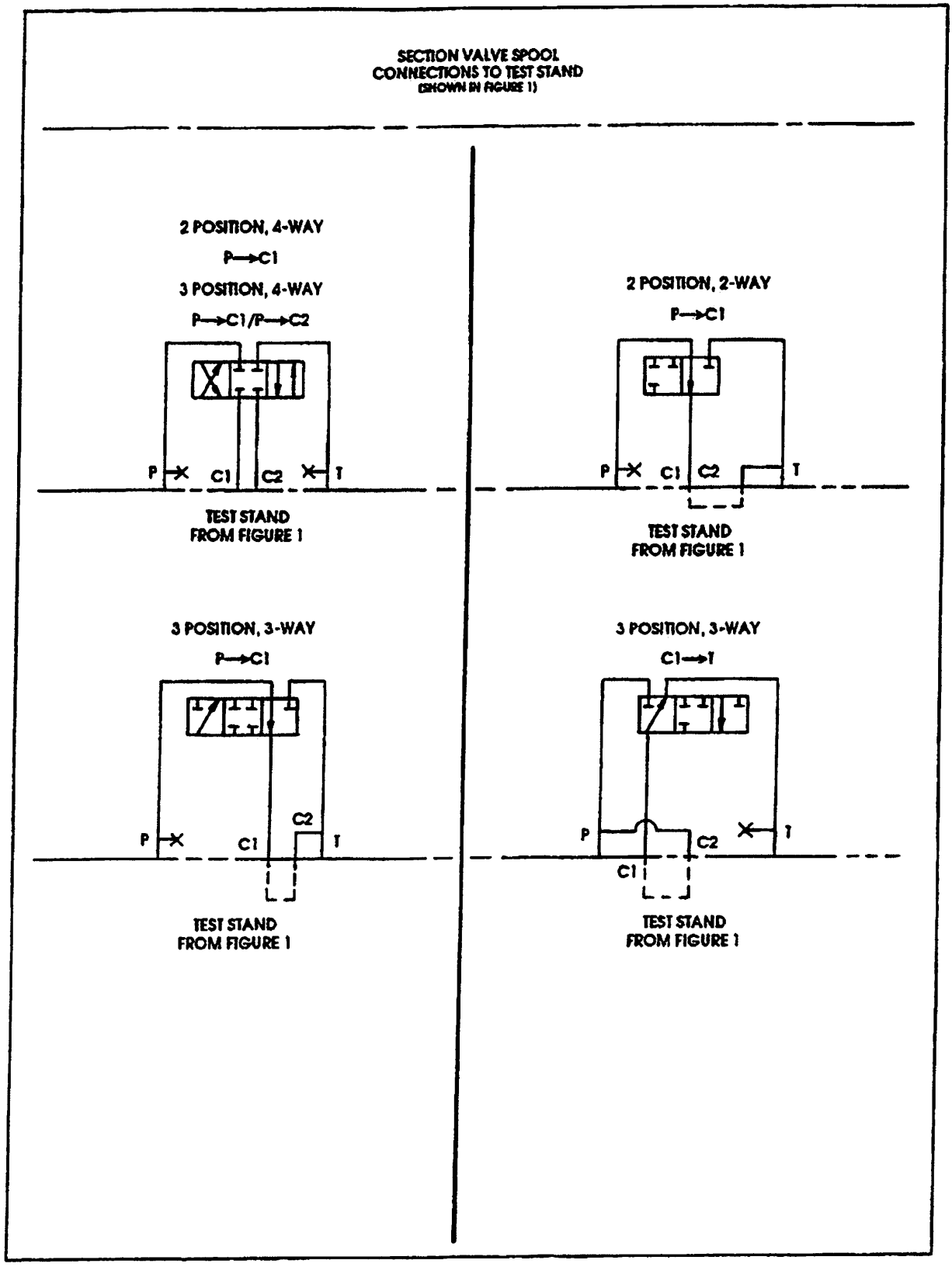
SECTION VALVE SPOOL
CONNECTIONS TO TEST STAND
(SHOWN IN FIGURE 1)
2 POSITION, 4-WAY
P→C1
3 POSITION, 4-WAY
P→C1/P→C2
P
C1
C2
T
TEST STAND
FROM FIGURE 1
2 POSITION, 2-WAY
P→C1
P
C1
C2
T
TEST STAND
FROM FIGURE 1
3 POSITION, 3-WAY
P→C1
P
C1
C2
T
TEST STAND
FROM FIGURE 1
3 POSITION, 3-WAY
C1→T
P
C2
T
C1
TEST STAND
FROM FIGURE 1

FIGURE 2

Bypass/Relief Inlet Adjustment

Bypass Adjustment

Bypass pressure is set at the factory and is not adjustable.

Relief Valve Adjustment Procedure

1. To set main inlet relief, a work segment must be "deadheaded." This segment must not have any option ports or pressure limiters with a setting lower than the main relief setting.
2. **NOTE:** Test stand pressure relief must be higher than the specified setting for the valve.
3. To change the setting, a gauge must be plumbed in a supply line. The adjustment screw is behind a #2 SAE plug in the relief cartridge. Use a 1/8" allen wrench to remove the #2 SAE plug and a 5/32" allen wrench to adjust the relief setting.
   NOTE: Adjustment screw is not self-contained. Adjustment is not limited to a maximum pressure setting. Do not adjust the screw all the way in or out.
4. When finished, re-install the #2 SAE plug.

WARNING

ALWAYS USE SAFE WORK HABITS. HYDRAULIC OIL IS UNDER HIGH PRESSURE.

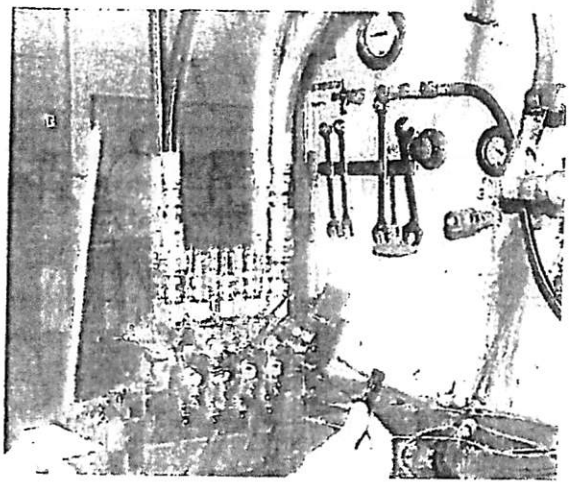

Individual Segment Pressure Compensator Adjustment

Before beginning adjustment it is advised to review this entire procedure first.

General

Proportional work segments are adjusted to deliver the indicated flow rate, i.e., the main spool is specific to the rated flow, and the individual compensator spool is adjusted/shimmed in accordance with the flow rate.

All on/off (VQL0) segments contain the same main spool and have individual compensators which are adjusted the same. As a standard, on/off segments are set at 15 GPM (57 L/min.). Therefore, proportional and on/off (VQL0) segments are discussed individually.

Have on hand:

- 3/4" socket or open end wrench
- 5/16" allen wrench

Shim stock information

Available shim thicknesses are as follows:

P/N DB1546.248 = 0.025 inches (0,635 mm)
P/N DB1547.248 = 0.008 inches (0,203 mm)
P/N DB1548.258 = 0.003 inches (0,076 mm)

Percentage (%) of rated flow for every .010" (0,25 mm) of shims is as follows:

4.0% for spool No's A thru 4
5.5% for spool No. 5
7.0% for spool No. 6

TABLE 1
Flow Range of Main Spools for 4,5,6 and "Y" Series

Spool I.D. No.	Rated Flow GPM	(L/min)	Flow Range GPM	(L/min)
7	30	(114)	30-24.1	(114-91)
6	24	(90)	24-17.1	(90-66)
5	17	(65)	17-11.1	(65-41)
4	11	(40)	11-7.1	(40-26)
3	7	(25)	7-4.1	(25-16)
2	4	(15)	4-2.6	(15-11)
1	2.5	(10)	2.5-1.4	(10-6)
A	1.3	(5)	1.3-0.7	(5-2.5)

IMPORTANT!! STAY WITHIN THESE RANGES!
(Maximum shim pack size=.125")

Individual Compensator Adjustment Procedure, ON/OFF Segments ("VQL0" Only)

1. To achieve flow rates of less than 15 GPM (57 L/min.), adjust the appropriate flow limiter(s). All ON/OFF spools are set at the factory for 15 GPM (57 L/min.). The following is recommended for segments used in ON/OFF operation:

Spool Type	Flow Range
VQLZ	0-4.0 GPM (0-15,1 L/min)
VQL0***-	4.1-24.0 GPM (15,2-90,8 L/min)

Individual Compensator Adjustment Procedure, Proportional Segments

To change the flow rating of a proportional segment, it will be necessary to:

a. re-shim the individual compensator spool per graph (below) or;
b. change the main spool. Re-shim the individual compensator spool, if necessary. Table 1 provides the flow range for each spool.

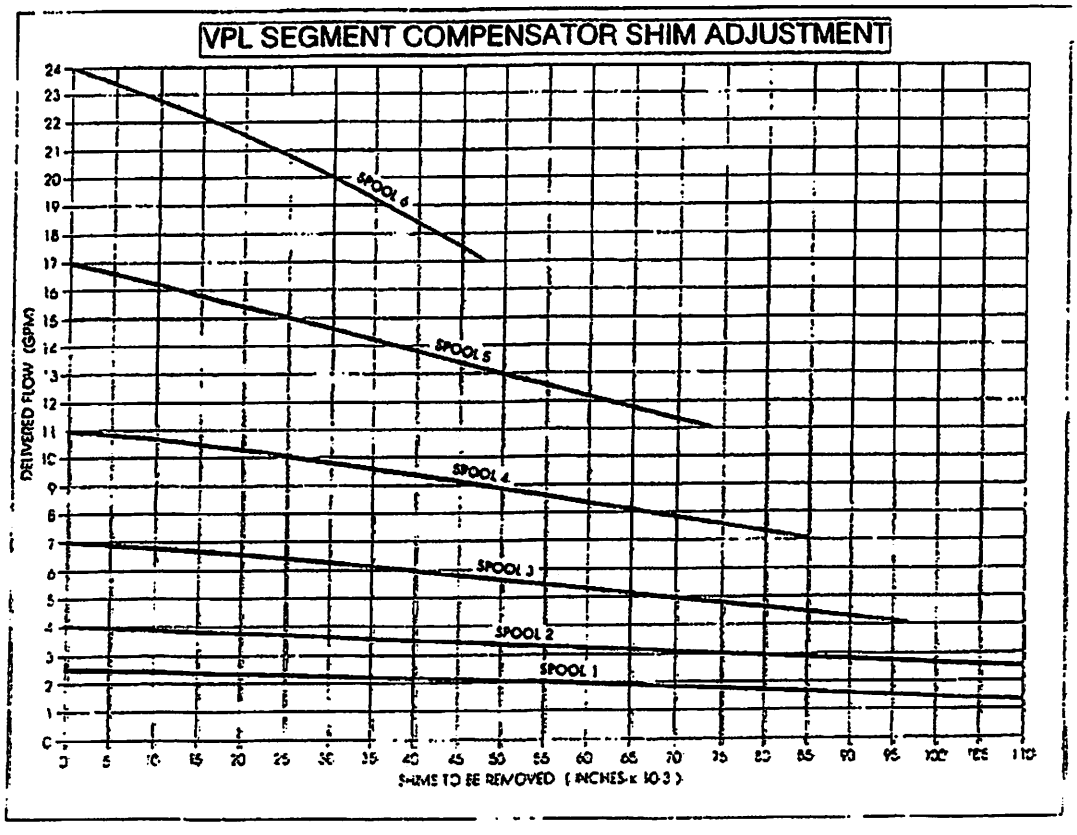

Procedure

1. Remove the compensator plug (item 29). Next, remove the compensator springs, watching for shim stock that may adhere to the bottom.
2. Use the shim insertion tool (shown below) to either add or subtract the shims. Use the shim adjustment chart to decide how many shims to subtract (or add). Refer to Table 2 and the NOTE that follows it, so that the flow is adjusted within the specified ranges.

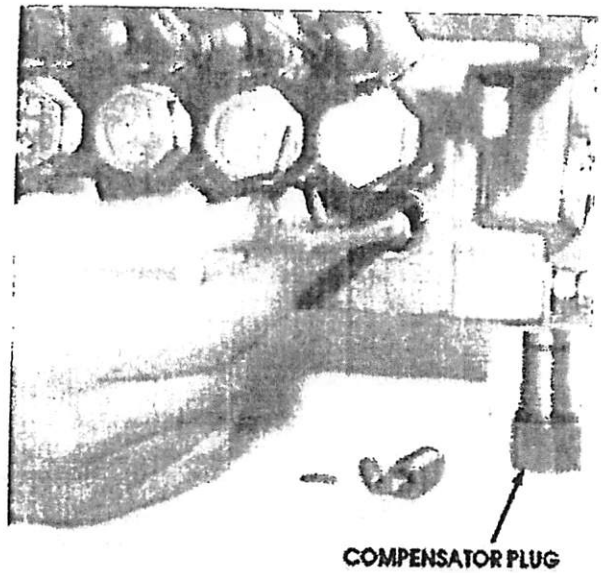

3. Re-assemble the compensator springs. All main spools use dual springs (items 24 and 25).
4. Install compensator plug (item 29) and torque to 15-20 Lb-ft (20-27 Nm).
5. Retest to verify the correct flow. If the correct flow has not been achieved, repeat steps 1-5.

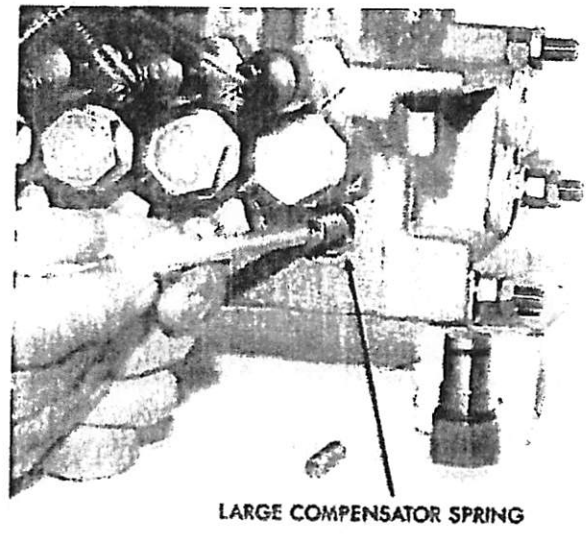

SHIM INSERTION TOOL - PART NO. DB1851.268

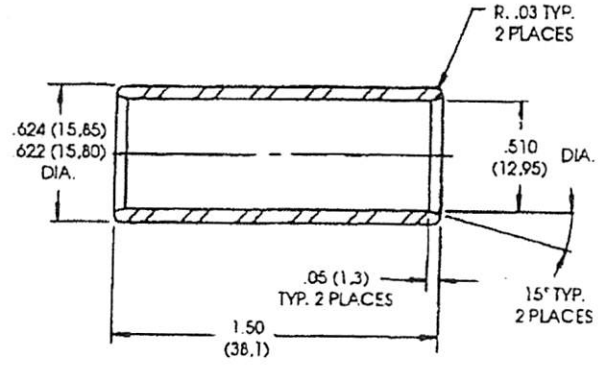

MATERIAL = STEEL

TABLE 2
Flow Range of Main Spools for 1,2,3,Series

Spool I.D. No.	Rated Flow GPM	(L/min)	Flow Range GPM	(L/min)
6	15	(57)	15-20 *	(57-76)
5	10	(38)	8-13	(30-49)
4	7	(25)	5-7	(19-26)
3	5	(19)	3.5-5	(13-19)
2	3.5	(13)	2.5-3.5	(9,5-13)
1	2.5	(10)	1.5-2.5	(6,5-9,5)
A	1.3	(5)	.75-1.3	(2,5-5)

IMPORTANT!! STAY WITHIN THESE RANGES!

- Spool #6 uses dual compensator springs for optimum performance and allows for an increase in flow, up to 20 GPM (76 L/min.) by **ADDING** shims. Do not set lower than 15 GPM (57 L/min.).
- Spool #5 uses dual compensator springs for optimum performance. Only this spool allows for either an increase or decrease in flow by **ADDING OR SUBTRACTING** shims, when using the dual compensator springs.
- Spools #4 through A use only the large diameter compensator spring which must only have shims **SUBTRACTED** for lower flows.
- Never add shims to set flow higher or lower than the rated flow.
- If a main spool is replaced but the wrong spring combination exists in the valve, the valve will work with a slight loss of compensation performance. As long as the springs are not changed, the compensator should not have to be reshimmed.

Individual Compensator Adjustment Procedure, ON/OFF Segments ("VQL0" Only)

1. To achieve flow rates of less than 15 GPM (57 L/min.), adjust the appropriate flow limiter(s). All ON/OFF spools are set at the factory for 15 GPM (57 L/min.).

Individual Compensator Adjustment Procedure, Proportional Segments

To change the flow rating of a proportional segment, it will be necessary to:

a. re-shim the individual compensator spool per Table 2 or;

b. change the main spool. Re-shim the individual compensator spool, if necessary. Table 2 provides the flow range for each spool.

Procedure

1. Remove the compensator plug (item 29). Next, remove the compensator spring, watching for shim stock that may adhere to the botton.
2. Use the shim insertion tool (shown on page 11) to either add or subtract the shims. Use the shim stock information to decide how many shims to subtract (or add). Refer to Table 2 and the NOTES that follow it, so that the flow is adjusted within the specified ranges.
3. Re-assemble the compensator spring(s). Main spools 5 and 6 use dual springs (items 24 and 25). Main spools A-4 use only the large spring (item 24).
4. Install compensator plug (item 29) and torque to 15-20 Lb-ft (20-27 Nm).
5. Retest to verify the correct flow. If the correct flow has not been achieved, repeat steps 1-5.

Flow Limiter Adjustment

General

Adjustment of the spool flow limiter is required:

a. In all on/off segments.

b. In four-way proportional segments if a lower flow rate is specified for one of the cylinder ports.

c. In three-way segments if lower return flow (C_1 to T) is specified.

Have on hand:

- 3/8" open end wrench
- 3/32" allen wrench

* FOR FLOW REQUIREMENTS OVER 15 GPM (57 L/min.), CONSULT FACTORY

Adjustment Procedure

1. **Four-way work segment adjustment:**

   With the flow meter connected to the segment cylinder ports and the test stand "on," energize the PULSAR™ solenoid with 100% modulation ratio (M.R.) to produce flow through the cylinder port to be adjusted. Check that pump relief valve is set high enough to saturate the cylinder port flow.

   Use upper screw to adjust C_2 flow and lower screw to adjust C_1 flow. While holding the adjustment screw (item 11) turn the seal nut (item 12) until loose, then turn the adjustment screw in while holding the seal nut, until the output flow equals the specified flow setting. After adjustment, hold the adjustment screw and tighten the seal nut with a torque of 2-3 Lb-ft (3-4 Nm). To adjust flow through the other cylinder port, repeat this process with other solenoid and flow limiter.

2. **Three-way (one cylinder port plugged) work segment adjustment:**

   For three-way segments it is necessary to furnish the singular cylinder port with access to a supply pressure line and flow meter to verify return flow. This access may be accomplished by (a) using a flow rectifier circuit, (b) by connecting a parallel pressure supply line to the cylinder port. Set supply pressure equal to load pressure on the application. Energize for 100% modulation ratio at the C_2 solenoid.

   While holding the lower adjustment screw (item 11), turn the seal nut (item 12) until loose. Then turn adjustment screw in, while holding the seal nut until the output flow is equal to specified setting. After adjustment, hold the adjustment screw and tighten the seal nut with a torque of 2-3 Lb-ft (3-4 Nm).

3. **For flow limiters which do not require adjustment:**

   All flow limiters are assembled at the factory in a retracted position, unless otherwise specified.

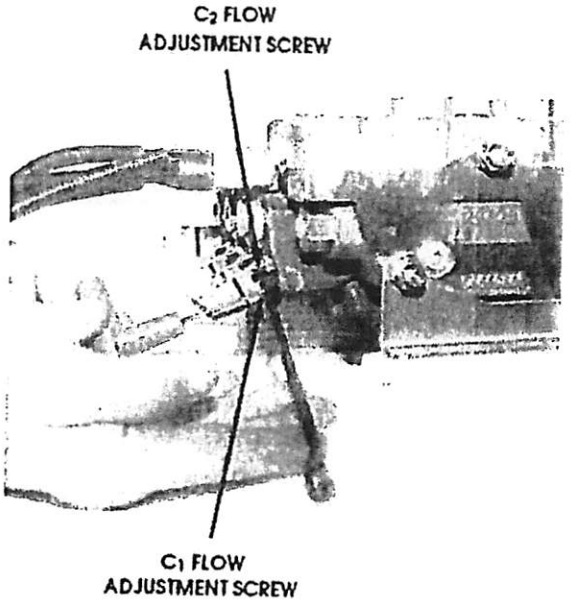

Pressure Limiter Adjustment

General

There are three (3) different configurations of pressure limiters in a work segment.

1. A common pressure limiter having both cylinder ports controlled by the same setting.
2. Individual pressure limiters for each cylinder port.
3. C_1 pressure limiter only. The body is not machined for C_2 pressure limiter.

Have on hand:

- 1/8" allen wrench
- 5/32" allen wrench

Adjustment Procedure

1. Flow is not required through the segment whenever setting a pressure limiter. A gauge must be connected to either the deadheaded cylinder port that is being tested or the #4 load sense port on the inlet. Energize the appropriate Pulsar™ solenoid with 100% M.R. to produce a pressure at the deadheaded cylinder port. Turn the adjustment screw until the pressure is equal to the specified setting. Adjustment range is 200 to 4,000 PSI (13,8 to 275,9 bar), with pressure per turn being approximately equal to 750 PSI (51,7 bar).
2. The common pressure limiter is set by turning the adjustment screw within the compensator plug behind a #2 SAE plug (item 14).
3. Individual pressure limiters are set in two (2) different locations on the valve. C_1 cylinder port is controlled by the limiter adjustment screw located behind a #2 SAE plug (item 14) in the compensator plug. C_2 cylinder port is controlled by the limiter (items 15, 16, and 18) located in the body. An adjustment screw is behind the #2 SAE plug (item 14).
4. A working segment can also be ordered with only a C_1 pressure limiter. This is set by turning the adjustment screw within the compensator plug behind a #2 SAE plug (item 14).

CAUTION: THESE ADJUSTMENT SCREWS ARE NOT SELF-CONTAINED. DO NOT ADJUST THE SCREW ALL THE WAY IN OR OUT

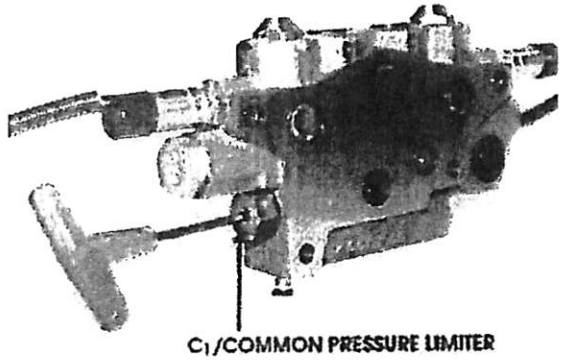

C_1/COMMON PRESSURE LIMITER

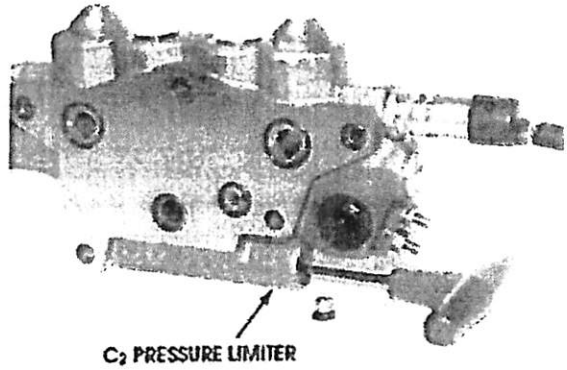

C_2 PRESSURE LIMITER

ASSEMBLY DRAWING

VBL BYPASS INLET SEGMENT PARTS LIST

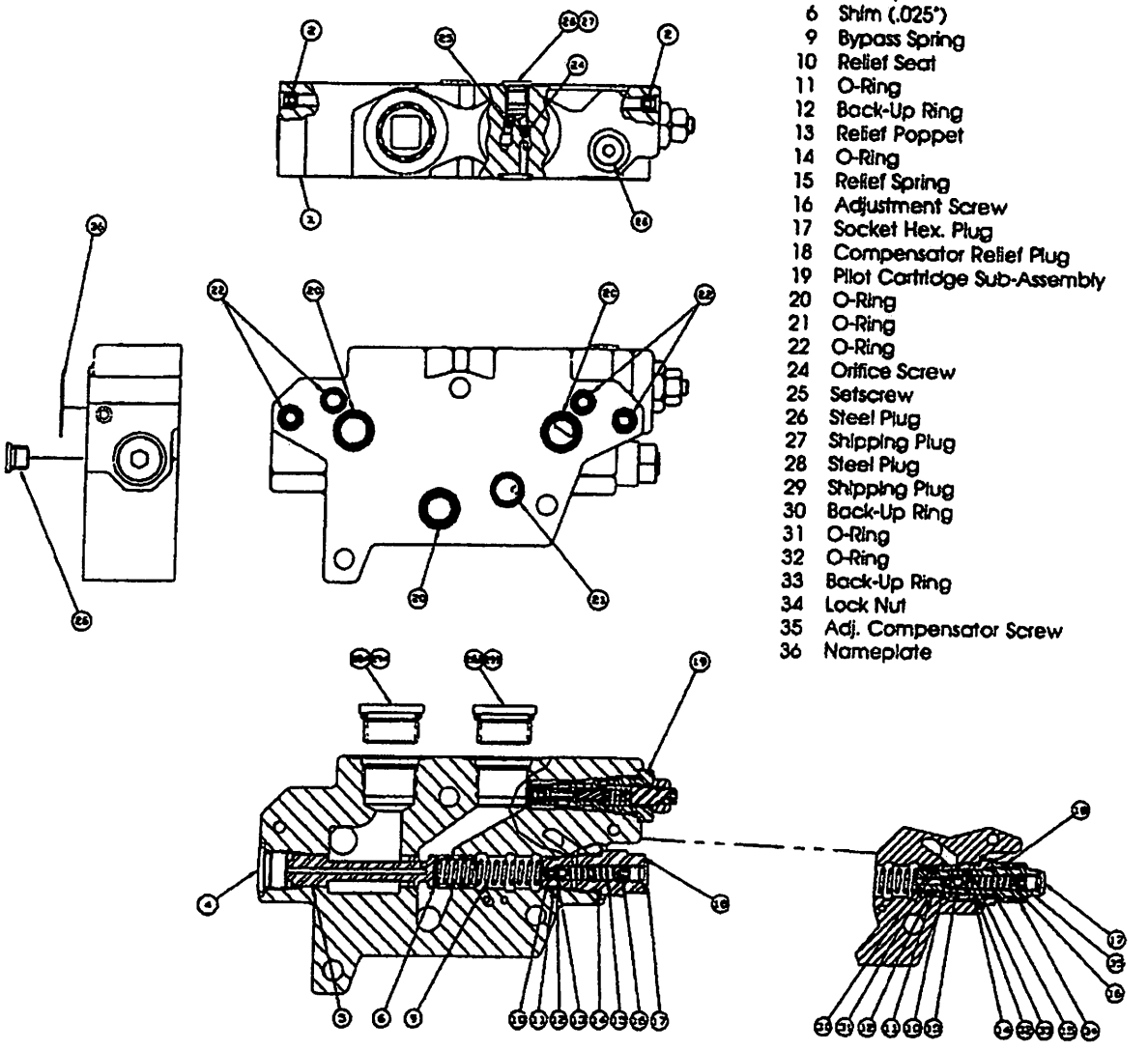

1 Inlet Valve Body
2 Construction Plug
4 Socket Hex Plug
5 Inlet Spool
6 Shim (.025")
9 Bypass Spring
10 Relief Seat
11 O-Ring
12 Back-Up Ring
13 Relief Poppet
14 O-Ring
15 Relief Spring
16 Adjustment Screw
17 Socket Hex. Plug
18 Compensator Relief Plug
19 Pilot Cartridge Sub-Assembly
20 O-Ring
21 O-Ring
22 O-Ring
24 Orifice Screw
25 Setscrew
26 Steel Plug
27 Shipping Plug
28 Steel Plug
29 Shipping Plug
30 Back-Up Ring
31 O-Ring
32 O-Ring
33 Back-Up Ring
34 Lock Nut
35 Adj. Compensator Screw
36 Nameplate

ASSEMBLY DRAWING

VPL WORK SEGMENT PARTS LIST

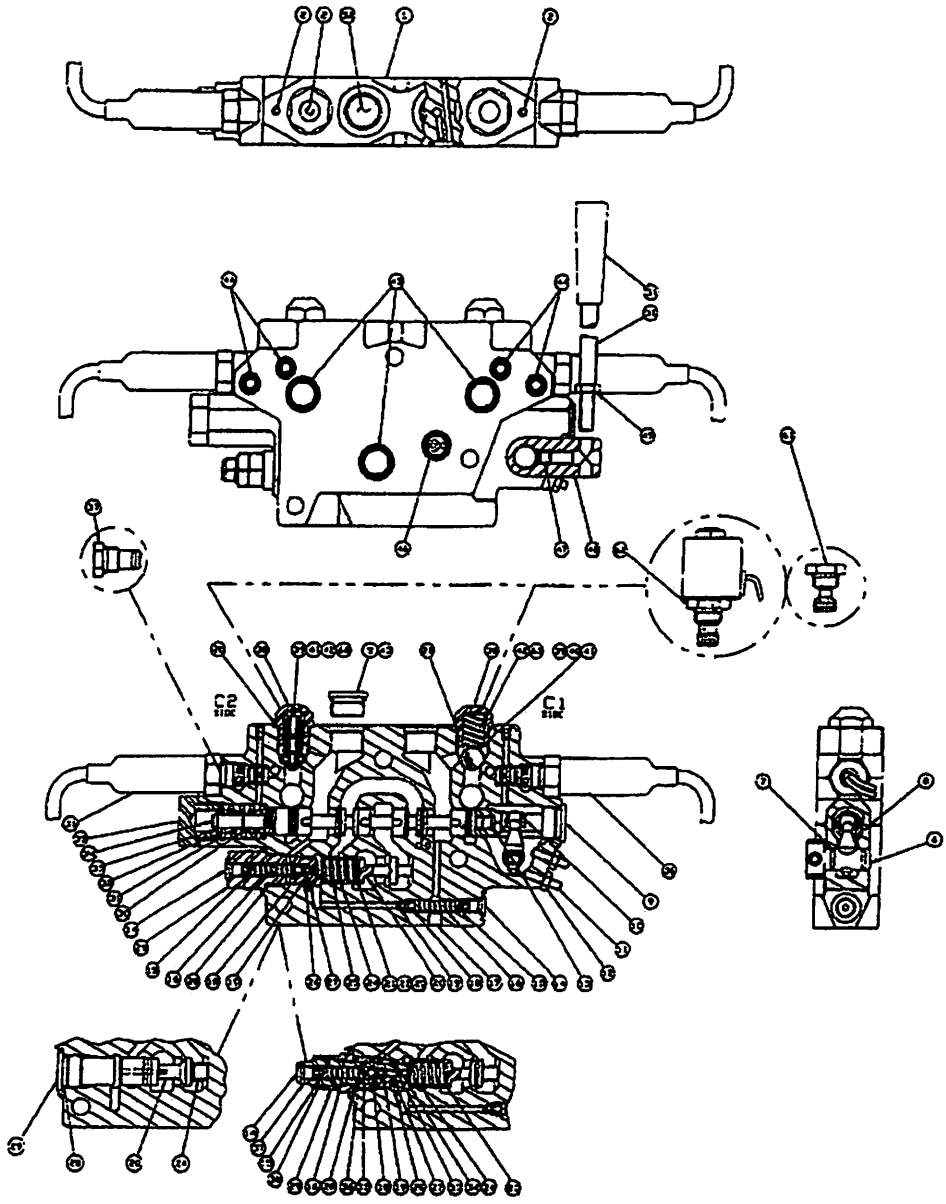

1 Main Segment Valve Body
2 Construction Plug
6 Shaft
7 Shaft Seal
8 Linkage
9 Socket Hex Plug
10 Hook
11 F. L. Set Screw
12 Seal Nut
13 O-Ring
14 Socket Hex Plug
15 Adjustment Screw
16 Relief Spring
17 Pipe Plug
18 Relief Poppet
19 Relief Seat
20 Compensator Spool
21 Comp. Shim (.025")
22 Comp. Shim (.008")
23 Comp. Shim (.003")
24 Compensator Spring
25 Secondary Comp. Spring
26 O-Ring
27 Back-Up Ring
28 O-Ring
29 Compensator Plug
30 Main Spool Shim
31 Centering Spring
32 Spring Guide
33 Retaining Ring
34 Main Spool
35 Hex Head Plug
36 Solenoid Assembly
37 Solenoid Plug Sub-Assembly
38 Relief Plug
39 Relief / A.C. Cartridge
40 Relief / A.C. Cartridge
41 Check Ball (1/2")
42 Check Spring
43 Port Plug
44 O-Ring
45 O-Ring
46 O-Ring
47 Adapter Screw
48 Handle Adaptor
49 Jam Nut
50 Handle Rod
51 Knob
52 Shipping Plug
53 O-Ring
54 Back-Up Ring
55 O-Ring
56 Back-Up Ring
57 Adj. Compensator Screw
58 Lock Nut
60 Defeat Spring
61 Delta Defeat Plug
62 Solenoid Valve S/A

Parker Hannifin Corporation
Hydraulic Valve Division
520 Temes Avenue
Elyria, Ohio, USA 44035
Tel: (440) 366-5200
Fax: (440) 366-5253
www.parker.com/hydraulicvalve

Bulletin HY14-2101-M1/US,
2C, 9/02, PHD

aerospace
climate control
electromechanical
filtration
fluid & gas handling
hydraulics
pneumatics
process control
sealing & shielding

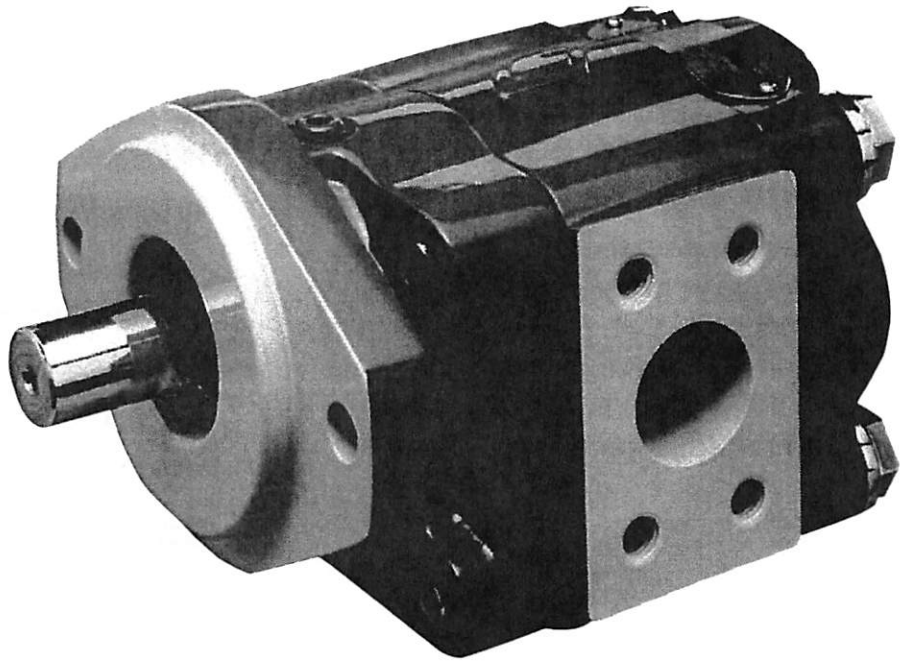

PGP030/031™ Series
PGP050/051™ Series
PGP075/076™ Series

Single and Multiple Pumps and Motors

Parker

ENGINEERING YOUR SUCCESS.

The Parker Hannifin Gear Pump Division Assures:

- Consistent quality
- Technical innovation
- Premier customer service

Worldwide Sales and Service

Parker operates sales and service centers in major industrial areas worldwide. Call 1-800-C-PARKER for more information, or for a synopsis of the Gear Pump Division, contact a Parker representative.

The Gear Pump Division's ability to engineer specialty products for unique applications has kept us at the forefront of technology, and ensured our position as the industry leader. Our success has come from providing a quality product with excellent sales and service support.

We manufacture hydraulic components for a wide range of industries including:

- Construction
- Refuse/dump truck
- Material handling
- Forestry
- Agriculture
- Industrial

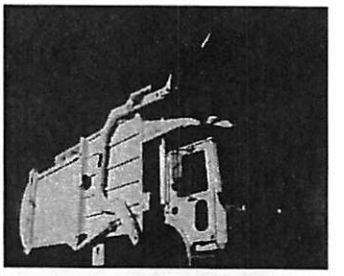

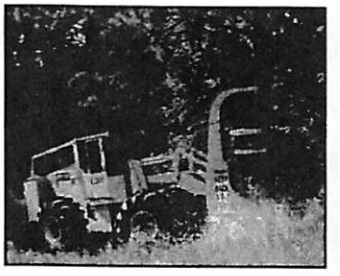

WARNING

FAILURE OR IMPROPER SELECTION OR IMPROPER USE OF THE PRODUCTS AND/OR SYSTEMS DESCRIBED HEREIN OR RELATED ITEMS CAN CAUSE DEATH, PERSONAL INJURY AND PROPERTY DAMAGE.

This document and other information from Parker Hannifin Corporation, its subsidiaries and authorized distributors provide product and/or system options for further investigation by users having technical expertise. It is important that you analyze all aspects of your application and review the information concerning the product or system in the current product catalog. Due to the variety of operating conditions and applications for these products or systems, the user, through its own analysis and testing, is solely responsible for making the final selection of the products and systems and assuring that all performance, safety and warning requirements of the application are met.

The products described herein, including without limitation, product features, specifications, designs, availability and pricing, are subject to change by Parker Hannifin Corporation and its subsidiaries at any time without notice.

Offer of Sale

The items described in this document are hereby offered for sale by Parker Hannifin Corporation, its subsidiaries or its authorized distributors. This offer and its acceptance are governed by the provisions stated in the "Offer of Sale".

© Copyright 2001, Parker Hannifin Corporation, All Rights Reserved.

Parker Hannifin Corporation
Gear Pump Division
Kings Mountain, North Carolina USA

Index

030/031 Ordering Information 4
050/051 Ordering Information 10
075/076 Ordering Information 15
Average Output Flow - Pumps 20
Average Input Power - Pumps 21
PL Factor 21
Average Performance Data - Motors 030/050/075 22
Average Performance Data - Motors 031/051/076 23
Dimensional Data 24-25
Approximate Weight 24
Offer of Sale 26

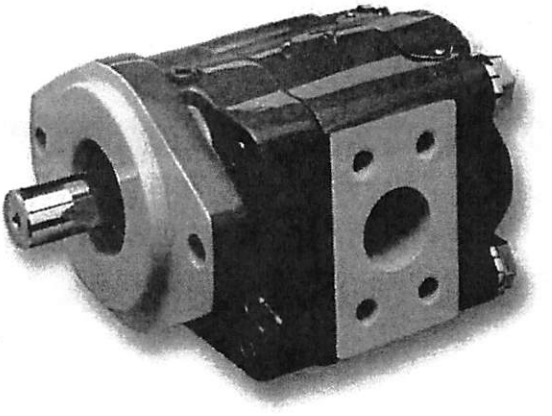

Pump/Valve Products

PGP030/031

- Flows to 41 GPM
- Pressures to 3000 psi
- Speeds to 2400 rpm
- Priority valves
- Two-speed valves
- Piggybacks
- Winch motors
- Flow dividers

PGP050/051

- Flows to 66 GPM
- Pressures to 3000 psi
- Speeds to 2400 rpm
- Priority valves
- Two-speed valves
- Unloader valve
- Winch motors
- Flow dividers
- Piggybacks

PGP075/076

- Flows to 128 GPM
- Pressures to 3000 psi
- Speeds to 2400 rpm
- Two-speed valves
- Piggybacks
- Winch motors
- Flow dividers

Parker Hannifin Corporation
Gear Pump Division
Kings Mountain, North Carolina USA

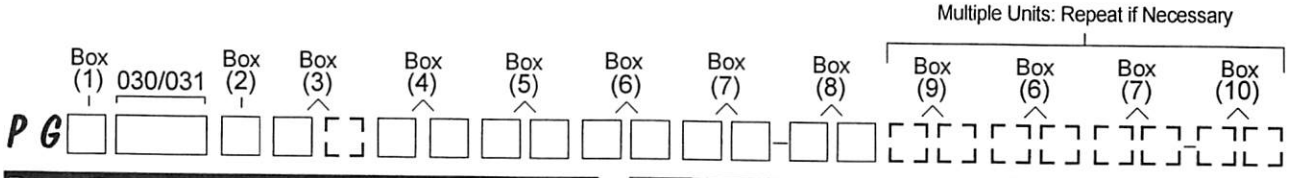

Box 1 Pump/Motor

P	Pump
M	Motor

Box 2 Unit

A	Single Unit
B	Tandem Unit
C	Single or Tandem w. two-piece shaft (O.B. bearing required)

Box 3 Shaft End Cover

1	Pump, cw w/o O.B. bearing
2	Pump, ccw w/o O.B. bearing
3	Pump, bi-rotational w/o O.B. bearing (030 series only)
4	Pump, cw with O.B. bearing
5	Pump, ccw with O.B. bearing
6	Pump, bi-rotational with O.B. bearing (030 series only)
8	Motor, bi-rot. with O.B. bearing + ¼" NPT drain
9	Motor, bi-rot. w/o O.B. bearing + ¼" NPT drain
18	Motor, bi-rot. with O.B. bearing + ¼" BSPP drain
19	Motor, bi-rot. w/o O.B. bearing + ¼" BSPP drain

Box 4 Shaft End Cover *(type 1 unless noted)*

00	Pad mount
05	6 bolt flange - 3.25" dia. bolt circle: Pilot Dia. 2 5/8"
42	SAE 4 bolt "B" ANSI 101-4: Pilot Dia. 4"
78	SAE 4 bolt "C" ANSI 127-4: Pilot Dia. 5"
91	030-030, 031-031, & 050-030, 051-031 for piggyback: Pilot Dia. 4"
92	075-030, 076-031 for piggyback: Pilot Dia. 5"
94	SAE 2 bolt "A" ANSI 82-2: Pilot Dia. 3¼"
96*	SAE 2 bolt "B" ANSI 101-2, **type 2**: Pilot Dia. 4"
	*(not available with O.B. bearing)
97	SAE 2 bolt "B" ANSI 101-2: Pilot Dia. 4"

Box 5 Port End Cover (Rear Ported)

Left	Right	Single	Tandem	Extended Studs
Unported				
-	-	**BE**	**BI**	**BY**
NPT Porting (030 series only)				
¾"	-	**KE**	**KI**	**KY**
-	¾"	**LE**	**LI**	**LY**
¾"	¾"	**ME**	**MI**	**MY**
NPT Porting (030 series only) - Modified Casting*				
1"	1"	**QU**	**QU**	-

For All Units
To determine direction of shaft rotation, view the unit with the shaft pointing toward you, and the idler (driven) gear beneath the shaft. With clockwise rotation, flow will be left to right. The pump inlet port will be on the left, outlet on the right. The flow is in the opposite direction with counter-clockwise rotation. Inverting the pump will reverse the inlet and outlet ports but not the direction of rotation.

Box 5 Port End Cover (Rear Ported) *continued*

Left	Right	Single	Tandem	Extended Studs
O.D.T. Porting				
¾"	-	**CE**	**CI**	**CY**
-	¾"	**DE**	**DI**	**DY**
¾"	¾"	**FE**	**FI**	**FY**
1"	¾"	**GE**	**GI**	**GY**
¾"	1"	**HE**	**HI**	**HY**
O.D.Tube Porting (30 series only)				
1"	1"	**JE**	**JI**	**JY**
O.D.Tube Porting - Modified Casting*				
¾"	-	**CA**	**CU**	**CO**
-	¾"	**DA**	**DU**	**DO**
¾"	¾"	**JA**	**JU**	**BO**
1"	¾"	**KA**	**KU**	-
¾"	1"	**LA**	**LU**	-
1"	-	**MA**	**MU**	**YO**
-	1"	**RA**	**SU**	**RO**
1"	1"	**ZA**	**ZU**	**ZO**
1 ¼"	1"	**GU**	**GU**	-
1"	1 ¼"	**HU**	**HU**	-
BSPP Porting				
¾"	-	**WE**	**WI**	**WY**
-	¾"	**XE**	**XI**	**XY**
¾"	¾"	**ZE**	**ZI**	**ZY**
Metric Straight Thread				
¾"	-	**NE**	**NI**	**NY**
-	¾"	**PE**	**PI**	**PY**
¾"	¾"	**QE**	**QI**	**QY**
1"	¾"	**RE**	**RI**	**RY**
¾"	1"	**SE**	**SI**	**SY**

Port End Cover (5) (Side Ported)

Left	Right	Single	Tandem	Extended Studs
O.D.Tube Porting - Modified Casting*				
1 ¼"	1"	**TU**	**TU**	-
1"	1 ¼"	**XU**	**XU**	-

	CW	CCW	Double
Piggyback Port End - Pump Only			
Type 030-030, 031-031 (double 030-030 only)	**KO**	**LO**	**MO**

* *Modified PEC casting is for higher pressure/larger port applications.*

Parker Hannifin Corporation
Gear Pump Division
Kings Mountain, North Carolina USA

Box 6 Gear Housing

				030 Series						031 Series				
Housing Code				07	10	12	15	17	20	10	12	15	17	20
Displacement (C.I.R.)				1.48	1.97	2.46	2.96	3.45	3.94	1.97	2.46	2.96	3.45	3.94
Maximum (PSI)				2500	2500	2500	2500	2250	2250	3000	3000	3000	2500	2500
IN	**OUT**	**CW**	**CCW**											
														No Porting
-	-	**AB**	**AB**	X	X	X	X	X	X	X	X	X	X	X
														NPT Porting
½"	-	**IL**	**IM**	X	X									
-	½"	**IM**	**IL**	X	X									
½"	½"	**IR**	**IR**	X										
¾"	-	**IC**	**ID**		X	X	X	X	X					
-	¾"	**ID**	**IC**		X	X	X	X	X					
¾"	¾"	**IF**	**IF**		X	X	X	X	X					
1"*	¾"	**IJ**	**IG**		X*	X	X	X						
1 ¼"*	¾"	**IK**	**IH**				X*	X						
1"*	-	**YC**	**YD**		X*	X	X	X						
-	1"	**YD**	**YC**			X	X	X						
1"	1"	**YF**	**YF**			X	X	X	X					
1 ¼"*	1"	**YJ**	**YG**				X*	X	X					
1 ¼"*	-	**IA**	**IB**				X*	X	X					
-	1 ¼"	**IB**	**IA**					X	X					
1 ¼"	1 ¼"	**YL**	**YL**					X	X					
1 ½"*	-	**YA**	**YB**						X*					
1 ½"*	1 ¼"	**YP**	**YM**						X*					
														OD Tube Porting
¾"*	-	**EC**	**ED**		2000	X	X	X		X*	X	X	X	X
-	¾"	**ED**	**EC**		2000	X	X	X			X	X	X	X
¾"	¾"	**EF**	**EF**		2000	X	X	X	X		X	X	X	X
1"*	¾"	**EJ**	**EG**		2000*	X*	X	X	X		X*	X*		
1 ¼"*	¾"	**EK**	**EH**				X*	X*				X*	X*	
1 ½"*	¾"	**IP**	**IN**					X*	X*				X*	
7/8"	-	**EZ**	-			X								
-	7/8"	-	**EZ**			X								
1"*	7/8"	**EM**	**EL**			X*								
1"*	-	**AC**	**AD**		X*	2000	X	X	X	X*	X*	2500	X	X
-	1"	**AD**	**AC**			2000	X	X	X			2500	X	X
1"	1"	**AF**	**AF**				X	X	X			2500	X	X
1 ¼"*	1"	**AJ**	**AG**				X*	X*	X			2500*	X*	X*
1 ½"*	1"	**AK**	**AH**					X*	X*				X*	X*
1 ¼"*	-	**AA**	**AO**				X*	2000				X*	X*	
-	1 ¼"	**AO**	**AA**					2000						
1 ¼"	1 ¼"	**AL**	**AL**					2000	X					X
1 ½"*	1 ¼"	**AP**	**AM**					2000*	X*					X*
1 ½"*	-	**AE**	**AU**					X*	2000					X*
-	1 ½"	**AU**	**AE**						2000					

*** This porting is acceptable for low pressure inlet port only.**

NOTES
1. Shaded cells are acceptable for motor codes.
2. NPT ports are not recommended for use at pressures in excess of 1500 PSI.
3. "X" Means both codes are available.
4. "2000" or "2500" indicates maximum pressure rating on port.

Parker Hannifin Corporation
Gear Pump Division
Kings Mountain, North Carolina USA

Box 6 Gear Housing *continued*

					030 Series						031 Series				
Housing Code					07	10	12	15	17	20	10	12	15	17	20
Displacement (C.I.R.)					1.48	1.97	2.46	2.96	3.45	3.94	1.97	2.46	2.96	3.45	3.94
Maximum (PSI)					2500	2500	2500	2500	2250	2250	3000	3000	3000	2500	2500
IN	**OUT**	**CW**	**CCW**												
													Split Flange Porting		
¾"	-	UC	UD		X	X	X	X			X	X	X	X	
-	¾"	UD	UC		X	X	X	X			X	X	X	X	
¾"	¾"	UF	UF	X	X		X				X	X	X		
1"*	¾"	UJ	UG		X	X	X	X	X		X*	X			
1 ¼"*	¾"	UK	UH			X	X	X	X			X*	X*		
1"*	-	OC	OD			X	X	X	X		2500	X	X		
-	1"	OD	OC			X	X	X	X		2500	X	X		
1"	1"	OF	OF		X	X	X	X	X		2500	X	X	X	X
1 ¼"*	1"	OJ	OG			X*	X	X	X			X*	X*	X	X
1 ½"*	1"	OK	OH					X*	X					X*	X*
1 ¼"*	-	OA	OB			2000	X	X	X			X*	2500		
-	1 ¼"	OB	OA			2000	X	X	X				2500		
1 ¼"	1 ¼"	OL	OL				X	X	X					X	X
1 ½"*	1 ¼"	OP	OM					X*	X					X*	X*
1 ½"*	-	OE	OU					2000	X					X*	X
-	1 ½"	OU	OE					2000	X						X
													BSPP Porting		
¾"*	-	YN	YQ	X*	X	X	X	X	X		2500	X	X		X
-	¾"	YQ	YN		X	X	X	X	X		2500	X	X		X
¾"	¾"	YS	YS		X	X		X	X		2500	X	X		X
1"*	¾"	YV	YT		X*	X*	X	X			2500*	X*	X*	X	X
1 ¼"*	¾"	YW	YU					X*	X*				X*	X*	
1"*	-	SL	RQ			2000	X	X	X		X		2500	X	
-	1"	RQ	SL			2000	X	X	X				2500	X	
1"	1"	MP	MP			2000	X	X						X	X
1 ¼"*	1"	IX	VY				X*	X*	X*				2500*	X*	
1 ¼"*	-	NJ	UI					2000	X*						X*
-	1 ¼"	UI	NJ					2000	X*						
1 ¼"	1 ¼"	PF	PF						2000						
1 ½"*	1"	VI	HW											X*	X*
													Metric Straight Thread Porting		
¾"*	-	EN	TQ		X	X	X				2500	X			
-	¾"	TQ	EN		X	X	X				2500	X			
¾"	¾"	ES	ES		X	X					2500	X			
1"*	¾"	EV	ET		X*	X*	X	X				X*	X*		
1 ¼"*	¾"	EW	EU										X*		
1"*	-	NL	ER		X*		X	X	X				2500		
-	1"	ER	NL				X	X	X				2500		
1"	1"	CM	CM			2000	X						2500		
1 ¼"*	1"	EX	VE				X*	X*	X*				2500*		
1 ½"*	1"	VA	HA				X*	X*	X*					X*	X*
1 ¼"	1 ¼"	PA	PA						2000	X					
1 ½"	1 ¼"	SA	QA							X*					

* This porting is acceptable for low pressure inlet port only.

NOTES
1. Shaded cells are acceptable for motor codes.
2. "X" Means both codes are available.
3. "2000" or "2500" indicates maximum pressure rating on port.

Parker Hannifin Corporation
Gear Pump Division
Kings Mountain, North Carolina USA

Box 6 Gear Housing *continued*

				030 Series					031 Series				
Housing Code				07	10	12	15	17	20	10	12	15	17	20
Displacement (C.I.R.)				1.48	1.97	2.46	2.96	3.45	3.94	1.97	2.46	2.96	3.45	3.94
Maximum (PSI)				2500	2500	2500	2500	2250	2250	3000	3000	3000	2500	2500
IN	**OUT**	**CW**	**CCW**											
										Metric Split Flange Porting				
¾"	-	VN	VQ	X	X	X	X	X		X	X			X
-	¾"	VQ	VN	X	X	X	X	X		X	X			X
¾"	¾"	VS	VS	X	X					X				
1"*	¾"	RV	VT	X	X	X	X			X*	X			
1 ¼"*	¾"	RW	RU		X*		X				X*	X*		
1"*	-	UL	UR	X	X	X	X	X		2500	X	X		
-	1"	UR	UL	X	X	X	X	X		2500	X	X		
1"	1"	UM	UM		X	X	X				X	X	X	X
1 ¼"*	1"	UX	VU		X*	X	X	X			X*	X*	X	X
1 ½"*	1"	VO	HO				X*	X					X*	X*
1 ¼"*	-	NO	UO			X		X			X*	2500		
-	1 ¼"	UO	NO			X		X			X*	2500		
1 ¼"	1 ¼"	PO	PO			X	X	X					X	X
1 ½"*	1 ¼"	SO	QO				X*	X					X*	X*
1 ½"*	-	UY	TO			X*	2000						X*	X
-	1 ½"	TO	UY				2000							X

* This porting is acceptable for low pressure inlet port only.

NOTES
1. Shaded cells are acceptable for motor codes.
2. "X" Means both codes are available.
3. "2000" or "2500" indicates maximum pressure rating on port.

Box 7 Gear Width

030 Series

	Gear Width	in.³/rev.	cm³/rev.	Max Pressure
05	½"	0.99	16.1	2500 psi (172 bar)
07	¾"	1.48	24.2	2500 psi (172 bar)
10	1"	1.97	32.3	2500 psi (172 bar)
12	1 ¼"	2.46	40.4	2500 psi (172 bar)
15	1 ½"	2.96	48.4	2500 psi (172 bar)
17	1 ¾"	3.45	56.5	2250 psi (155 bar)
20	2"	3.94	64.6	2250 psi (155 bar)

031 Series

	Gear Width	in.³/rev.	cm³/rev.	Max Pressure
05	½"	0.99	16.1	3000 psi (207 bar)
07	¾"	1.48	24.2	3000 psi (207 bar)
10	1"	1.97	32.3	3000 psi (207 bar)
12	1 ¼"	2.46	40.4	3000 psi (207 bar)
15	1 ½"	2.96	48.4	3000 psi (207 bar)
17	1 ¾"	3.45	56.5	2500 psi (172 bar)
20	2"	3.94	64.6	2500 psi (172 bar)

Box 8 Shaft Type *(type 1 unless noted)*

For single, tandem, or two-piece shaft unless noted.

07	SAE "C" 14 tooth spline 1.25" dia., ANSI 32-4 (two piece only)
12	Keyed shaft .75 dia., .19"X.19"X1.56" key (two piece only)
14	030-030, 031-031 piggyback shaft
22	050-030, 051-031 piggyback shaft
23	075-030, 076-031 piggyback shaft
25	SAE "B" 13 tooth spline .88" dia., ANSI 22-4
30	SAE "B" keyed .88" dia., ¼"X3/8" X 1" key, ANSI 22-1
32	Clutch pump shaft, tapered & keyed, 1:4 taper (single & two piece), #6 woodruff key
43	SAE "B-B" keyed 1.00" dia. ¼"X3/8"X1 ¼" key, ANSI 25-1 modified length
65	SAE "B" 13 tooth spline .875" dia., ANSI 22-4, **type 2** (single & tandem)
66	SAE "B" keyed .88" dia, ¼"X3/8"X1" key, **type 2** (single & tandem)
67	SAE "B-B" keyed 1.00" dia., ¼"X3/8"X1 ¼" key, ANSI 25-1 modified length, **type 2** (single & tandem)
68	6 tooth spline 1.00" dia.
90	SAE "B" keyed w/ 5/8"-18 thread, .875" dia, ANSI 22-2 modified length (single & tandem)
95	SAE "A" 9 tooth spline, .62" dia. ANSI 16-4 (single only)
98	SAE "B-B" 15 tooth spline, 1.00" dia., ANSI 25-4 (single & tandem)

Box 9 Bearing Carriers Pump Only

Orientation
Rear Section
Front Section

Common Inlet Passage

IN	OUT	CW	CCW
		C	D
-	-	C	D
* -	-	A	U

** 031 Series only. Used when only one adjacent gear housing has an inlet port.*

NPT Porting (030 Series only)

1"	-	TB	BT
1 ¼"	-	VB	BV
1"	¾"	TX	XT
1 ¼"	¾"	VX	XV
1 ¼"	1"	VZ	ZV
1"	¾"	TJ	JT
1 ¼"	¾"	VJ	JV
1 ¼"	1"	VK	KV
1 ½"	1"	KW	-
1"	¾"	ZX	XZ
1"	¾"	ZS	SZ

ODT Porting

1"	-	CB	BC
1 ¼"	-	DB	BD
1 ½"	-	FB	BF
* -	¾"	-	JP
1"	¾"	CJ	JC
1 ¼"	¾"	DJ	JD
1 ½"	¾"	FJ	JF
1 ¼"	1"	DK	KD
1 ½"	1"	FK	KF

** 030 Series only.*

1"	¾"	CR	RC
1 ¼"	¾"	DR	RD
* 1 ½"	¾"	FR	RF
1 ¼"	1"	DS	SD
1 ½"	1"	FS	SF

** 030 Series only.*

1"	¾"	KJ	JK
1"	¾"	KX	XK

Split Flange Porting

IN	OUT	CW	CCW
1"	-	LB	BL
1 ¼"	-	MB	BM
1 ½"	-	NB	BN
-	¾"	BR	RB
1"	¾"	LR	RL
1 ¼"	¾"	MR	RM
1 ½"	¾"	NR	RN
1 ¼"	1"	MS	SM
1 ½"	1"	NS	SN
1"	¾"	LX	XL
1 ¼"	¾"	MX	XM
* 1 ½"	¾"	NX	XN
1 ¼"	1"	MZ	ZM
1 ½"	1"	NZ	ZN

** 030 Series only.*

1"	¾"	SR	RS
1"	¾"	RZ	ZR

BSPP Porting

1"	-	CX	XC
1 ¼"	-	DX	XD
1 ½"	-	FX	XF
* -	¾"	-	TL
1"	¾"	CT	TC
1 ¼"	¾"	DT	TD
1 ½"	¾"	FT	TF
1 ¼"	1"	DV	VD
1 ½"	1"	FV	VF

** 031 Series only.*

1"	¾"	GM	MG
1 ¼"	¾"	HM	MH
1 ½"	¾"	WM	MW
1 ¼"	1"	HN	NH
1 ½"	1"	WN	NW
1"	¾"	PN	NP
1"	¾"	SX	XS

Parker Hannifin Corporation
Gear Pump Division
Kings Mountain, North Carolina USA

Box 9 Bearing Carriers (Pump Only) - *continued*

Metric Split Flange Porting

IN	OUT	CW	CCW
1"	-	CH	HC
1 ¼"	-	DH	HD
1 ½"	-	FH	HF
-	¾"	PW	WP
1"	¾"	CW	WC
1 ¼"	¾"	DW	WD
1 ½"	¾"	FW	WF
1 ¼"	1"	DC	CD
1 ½"	1"	FC	CF
1"	¾"	GQ	QG
1 ¼"	¾"	HQ	QH
1 ½"	¾"	WQ	QW
1 ¼"	1"	HS	SH
1 ½"	1"	WS	SW
1"	¾"	ST	TS
1"	¾"	PX	XP

Metric Straight Thread Porting

IN	OUT	CW	CCW
1"	-	CL	LC
1 ¼"	-	DL	LD
1 ½"	-	FL	LF
1"	¾"	CZ	ZC
1 ¼"	¾"	DZ	ZD
1 ½"	¾"	FZ	ZF
1 ¼"	1"	DN	ND
1 ½"	1"	FN	NF
1"	¾"	GT	TG
1 ¼"	¾"	HT	TH
1 ¼"	1"	HV	VH
1 ½"	1"	WV	VW
1"	¾"	KL	LK
1"	¾"	PV	VP

Box 9 Bearing Carriers (Motor Only)

No Ports

IN	OUT	DUAL
-	-	B

NPT Porting (030 Series only)

IN	OUT	DUAL
1"	1"	TT
1 ¼"	1 ¼"	VV

ODT Porting

IN	OUT	DUAL
1"	1"	CC
1 ¼"	1 ¼"	BB
1 ½"	1 ½"	FF

Split Flange Porting

IN	OUT	DUAL
1"	1"	LL
1 ¼"	1 ¼"	MM
1 ½"	1 ½"	NN

BSPP Porting

IN	OUT	DUAL
1"	1"	EE
1 ¼"	1 ¼"	GG

Metric Split Flange Porting

IN	OUT	DUAL
1"	1"	RR
1 ¼"	1 ¼"	SS

Metric Straight Thread Porting

IN	OUT	DUAL
1"	1"	KK
1 ¼"	1 ¼"	JJ

Box 10 Connecting Shaft

For connecting tandem units.

1	Connecting Shaft - Multiple Units
14	Piggyback Pump Connecting Shaft 030 to 030, 031 to 031
22	Piggyback Pump Connecting Shaft 050 to 030, 051 to 031
23	Piggyback Pump Connecting Shaft 075 to 030, 076 to 031

NOTE
Split flange thread depths may be more shallow than S.A.E. standard. Contact Product Support Department for actual dimensions.

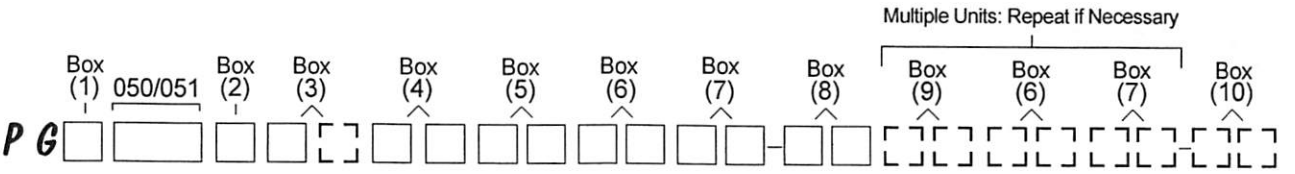

Box 1 Pump/Motor

P	Pump
M	Motor

Box 2 Unit

A	Single Unit
B	Tandem Unit
C	Single or Tandem w. two-piece shaft (O.B. bearing required)

Box 3 Shaft End Cover

1	Pump, cw w/o O.B. bearing
2	Pump, ccw w/o O.B. bearing
3	Pump, bi-rotational w/o O.B. bearing (050 series only)
4	Pump, cw with O.B. bearing
5	Pump, ccw with O.B. bearing
6	Pump, bi-rotational with O.B. bearing (050 series only)
8	Motor, bi-rot. with O.B. bearing + ¼" NPT drain
9	Motor, bi-rot. w/o O.B. bearing + ¼" NPT drain
18	Motor, bi-rot. with O.B. bearing + ¼" BSPP drain
19	Motor, bi-rot. w/o O.B. bearing + ¼" BSPP drain

Box 4 Shaft End Cover *(type 1 unless noted)*

00	4 bolt pad mount
42	SAE 4 bolt "B" ANSI 101-4: Pilot dia. 4"
78	SAE 4 bolt "C" ANSI 127-4: Pilot dia. 5"
91	050-050, 051-051 for piggyback: Pilot dia. 4"
92	075-050, 076-051 for piggyback: Pilot dia. 5"
96	SAE 2 bolt "B" ANSI 101-2, **type 2**: Pilot dia. 4"
97	SAE 2 bolt "B" ANSI 101-2: Pilot dia. 4"
98	SAE 2 bolt "C" ANSI 127-2: Pilot dia. 5"
99	SAE 2 bolt "C" ANSI 127-2, **type 2**: Pilot dia. 5"

Box 5 Port End Cover (Rear Ported)

Left	Right	Single	Tandem	Extended Studs
Unported				
-	-	**BE**	**BI**	**BY**
NPT Porting (050 series only)				
¾"	-	**KE**	**KI**	**KY**
-	¾"	**LE**	**LI**	**LY**
¾"	¾"	**ME**	**MI**	**MY**
O.D.T. Porting				
¾"	-	**CE**	**CI**	**CY**
-	¾"	**DE**	**DI**	**DY**
¾"	¾"	**FE**	**FI**	**FY**

Box 5 Port End Cover *continued*

Left	Right	Single	Tandem	Extended Studs
BSPP Porting				
¾"	-	**WE**	**WI**	**WY**
-	¾"	**XE**	**XI**	**XY**
¾"	¾"	**ZE**	**ZI**	**ZY**
Metric Straight Thread				
¾"	-	**NE**	**NI**	**NY**
-	¾"	**PE**	**PI**	**PY**
¾"	¾"	**QE**	**QI**	**QY**

Note

¾" PEC ports are rated to 2500 PSI max.

	CW	CCW	Double
Piggyback Port End - Pump Only			
Type 050-050, 051-051 & 050-030, 051-031	**KO**	**LO**	**MO**

Optional:

- Port end cover with integral R/V
- Larger rear ports
  1 ¼ x 1 S.F. or ODT
- Larger side ports
  1 ¼ S.F. or ODT inlet
  1" ODT outlet
- Larger rear ports, but requires special gear housing and cap screws
  1 ½ x 1 ½ NPT up to 1500 PSI

Contact Product Support Development for additional information.

FOR ALL UNITS

To determine direction of shaft rotation, view the unit with the shaft pointing toward you, and the idler (driven) gear beneath the shaft. With clockwise rotation, flow will be left to right. The inlet pump port will be on the left, outlet on the right. The flow is in the opposite direction with counter-clockwise rotation. Inverting the pump will reverse the inlet and outlet ports but not the direction of rotation.

Parker Hannifin Corporation
Gear Pump Division
Kings Mountain, North Carolina USA

Box 6 Gear Housing

				050 Series								051 Series						
Housing Code				07	10	12	15	17	20	22	25	10	12	15	17	20	22	25
Displacement (C.I.R.)				1.91	2.55	3.19	3.83	4.46	5.10	5.74	6.38	2.55	3.19	3.83	4.46	5.10	5.74	6.38
Maximum (PSI)				2500	2500	2500	2500	2000	2000	2000	2000	3000	3000	3000	3000	2500	2500	2500
IN	**OUT**	**CW**	**CCW**															
																No Porting		
-	-	AB	AB	X	X	X	X	X	X	X	X	X	X	X	X	X	X	X
																NPT Porting		
¾"	-	IC	ID		X	X	X	X										
-	¾"	ID	IC		X	X	X	X										
¾"	¾"	IF	IF		X	X	X	X	X									
1"*	¾"	IJ	IG		X*	X	X	X	X									
1 ¼"	¾"	IK	IH				X											
1"	-	YC	YD			X	X	X	X	X								
-	1"	YD	YC			X	X	X	X	X								
1"	1"	YF	YF			X	X	X	X	X	X							
1 ¼"*	1"	YJ	YG				X*	X	X	X	X							
1 ¼"*	-	IA	IB				X*	X*	X	X	X							
-	1 ¼"	IB	IA						X	X	X							
1 ¼"	1 ¼"	YL	YL					X	X	X	X							
1 ½"	1"	YK	YH								X							
1 ½"*	1 ¼"	YP	YM						X*	X	X							
1 ½"*	1 ½"	YR	YR								X							
																OD Tube Porting		
¾"*	-	EC	ED		2000	2000	X	X	X			X*	X*		X			
-	¾"	ED	EC		2000	2000	X	X	X						X			
¾"	¾"	EF	EF		2000	2000	X	X	X					2500	X			
1"*	¾"	EJ	EG		2000*	2000*	X*	X*	X						X*			
1 ¼"*	¾"	EK	EH				X*	X*						2500*	X			
1"*	-	AC	AD		X*	X*	2000	X	X	X	X	X*	X*	X*	X*	X		
-	1"	AD	AC				2000	X	X	X	X					X		
1"	1"	AF	AF				2000	X	X		X					X	X	X
1 ¼"*	1"	AJ	AG				2000*	X*	X*	X	X					X*		
1 ½"*	1"	AK	AH					X*	X*	X*						X*		X
1 ¼"*	-	AA	AO				X*	X*	X*	X	X			X*	X*		X	X
-	1 ¼"	AO	AA							X	X						X	X
1 ¼"	1 ¼"	AL	AL						X	X	X						X	X
1 ½"*	1 ¼"	AP	AM						X*	X*	X						X	X
1 ½"*	-	AE	AU						X*	X*						X*	X	X
-	1 ½"	AU	AE						X*	X								X
1 ½"	1 ½"	AR	AR								X							X

*** This porting is acceptable for low pressure inlet port only.**

NOTES
1. NPT ports are not recommended for use at pressures in excess of 1500 PSI.
2. Shaded cells are acceptable for motor codes.
3. "X" Means both codes are available.
4. "2000" or "2500" indicates maximum pressure rating on port.

Box 6 Gear Housing *continued*

				050 Series							051 Series						
Housing Code				10	12	15	17	20	22	25	10	12	15	17	20	22	25
Displacement (C.I.R.)				2.55	3.19	3.83	4.46	5.10	5.74	6.38	2.55	3.19	3.83	4.46	5.10	5.74	6.38
Maximum (PSI)				2500	2500	2500	2000	2000	2000	2000	3000	3000	3000	3000	2500	2500	2500
IN	**OUT**	**CW**	**CCW**														
															Split Flange Porting		
¾"	-	UC	UD	X	X	X	X				2500	X					
-	¾"	UD	UC	X	X	X	X				2500	X					
¾"	¾"	UF	UF					X		X	2500	X	X				
1"*	¾"	UJ	UG	X*	X*	X	X	X			2500*	X*	X*				
1 ¼"*	¾"	UK	UH									X*	X*	X*			
1"*	-	OC	OD	2000	X*	X	X	X	X	X		X*	2500	X	X		
-	1"	OD	OC	2000	2000	X	X	X	X	X			2500	X	X		
1"	1"	OF	OF		2000	X	X	X	X	X			2500	X	X	X	X
1 ¼"*	1"	OJ	OG		2000*	X*	X*	X	X	X			2500*	X*	X*		
1 ½"*	1"	OK	OH			X*	X*	X*	X	X			2500*	X*	X*	X	X
1 ¼"*	-	OA	OB		X*	X*	X*	X	X	X		X*	X*				
-	1 ¼"	OA	OB					X	X	X							
1 ¼"	1 ¼"	OL	OL			2000	X	X	X	X					X	X	X
1 ½"*	1 ¼"	OP	OM			2000*	X*	X*	X	X					X*	X	X
1 ½"*	-	OE	OU			X*	X*	X		X			X*	X*	X*		
-	1 ½"	OU	OE					X		X							
1 ½"	1 ½"	OR	OR					X	X	X						X	X
2"*	-	XB	ZB												X*		
2"*	1"	UQ	UB					X*	X*	X*							
2"*	1 ¼"	OQ	ON					X*	X*	X*					X*	X*	X*
2"*	1 ½"	OV	OS					X*	X*	X*						X*	X*
2"	2"	OX	OX							X*							
															BSPP Porting		
¾"*	-	YN	YQ	X*	X	X	X				X*	2500	2500	X	X		
-	¾"	YQ	YN		X	X	X					2500	2500	X	X		
¾"	¾"	YS	YS	2000	X	X				X		2500	2500		X		
1"*	¾"	YV	YT	2000*	X*	X*	X*	X				2500*	2500*	X*	X*		
1 ¼"*	¾"	YW	YU			X*											
1"*	-	SL	RQ		X*	X*	X*	X	X	X	X*	X*	X*	X*	X*	X	X
-	1"	RQ	SL					X	X	X					2500	X	X
1"	1"	MP	MP			2000	X	X		X					2500		X
1 ¼"*	1"	IX	VY			2000*	X*	X*	X	X					2500*	X	X
1 ½"*	1"	VI	HW							X					X*		X*
1 ¼"*	-	NJ	UI				X*		X	X						X	X
-	1 ¼"	UI	NJ						X	X						X	X
1 ¼"	1 ¼"	PF	PF						X	X						X	X
1 ½"*	1 ¼"	IS	IQ							X							X*
															Metric Straight Thread		
¾"*	-	EN	TQ	X*	X	X	X				X*	X*	X*	X			
-	¾"	TQ	EN		X	X	X					2500	2500	X			
¾"	¾"	ES	ES	2000	X							2500					
1"*	¾"	EV	ET	2000*	X*	X*	X	X				2500*	2500*	X*	X*		
1"*	-	NL	ER			X*	X	X	X				X*	X*	X*	X	
-	1"	ER	NL				X	X	X								
1"	1"	CM	CM			2000	X	X						2500			
1 ¼"*	-		UA					X*	X	X					X*	X	X
1 ¼"*	1"	EX	VE			2000*	X*	X*	X	X				2500*	X*	X	X
1 ¼"	1 ¼"	PA	PA					X*	X	X						X	X
1 ½"*	1 ¼"	SA	QA					X*	X*	X						X*	X*

*** This porting is acceptable for low pressure inlet port only.**

NOTES
1. Shaded cells are acceptable for motor codes.
2. "X" Means both codes are available.
3. "2000" or "2500" indicates maximum pressure rating on port.

Parker Hannifin Corporation
Gear Pump Division
Kings Mountain, North Carolina USA

Box 6 Gear Housing *continued*

				050 Series							051 Series						
Housing Code				10	12	15	17	20	22	25	10	12	15	17	20	22	25
Displacement (C.I.R.)				2.55	3.19	3.83	4.46	5.10	5.74	6.38	2.55	3.19	3.83	4.46	5.10	5.74	6.38
Maximum (PSI)				2500	2500	2500	2000	2000	2000	2000	3000	3000	3000	3000	2500	2500	2500
IN	**OUT**	**CW**	**CCW**												*Metric Split Flange Porting*		
¾"*	-	VN	VQ	X	X	X	X				X*						
-	¾"	VQ	VN	X	X	X	X										
1"*	¾"	RV	VT	X*	X*	X	X	X			2500*	X*					
1 ¼"*	¾"	RW	RU									X*	X*				
1"*	-	UL	UR		X*	X	X	X	X			X*	X*	X	X		
-	1"	UR	UL			X	X	X	X					X	X		
1"	1"	UM	UM		2000	X	X	X	X				2500	X	X	X	
1 ¼"*	1"	UX	VU		2000*	X*	X*	X	X	X			2500*	X*	X*		
1 ½"*	1"	VO	HO			X*	X*	X*					2500*	X*	X*	X	
1 ¼"*	-	NO	UO				X*	X	X	X		X*	X*				
-	1 ¼"	UO	NO					X	X	X							
1 ¼"	1 ¼"	PO	PO			2000	X	X	X	X					X	X	X
1 ½"*	1 ¼"	SO	QO			2000*	X*	X*	X	X					X*	X	X
1 ½"*	-	UY	TO			X*	X*		X					X*	X*		
-	1 ½"	TO	UY						X								
1 ½"	1 ½"	SV	SV					X	X	X						X	X
2"*	1 ¼"	JM	JR					X*	X*	X*					X*	X*	X*
2"*	1 ½"	JQ	JN					X*	X*	X*						X*	X*

*** This porting is acceptable for low pressure inlet port only.**

NOTES
1. Shaded cells are acceptable for motor codes.
2. "X" Means both codes are available.
3. "2000" or "2500" indicates maximum pressure rating on port.

Box 7 Gear Width

050 Series

	Gear Width	in.³/rev.	cm³/rev.	Max Pressure
05	½"	1.28	20.9	2500 psi (172 bar)
07	¾"	1.91	31.3	2500 psi (172 bar)
10	1"	2.55	41.8	2500 psi (172 bar)
12	1 ¼"	3.19	52.2	2500 psi (172 bar)
15	1 ½"	3.83	62.7	2500 psi (172 bar)
17	1 ¾"	4.46	73.1	2000 psi (138 bar)
20	2"	5.10	83.6	2000 psi (138 bar)
22	2 ¼"	5.74	94.0	2000 psi (138 bar)
25	2 ½"	6.38	104.5	2000 psi (138 bar)

051 Series

	Gear Width	in.³/rev.	cm³/rev.	Max Pressure
05	½"	1.28	20.9	3000 psi (207 bar)
07	¾"	1.91	31.3	3000 psi (207 bar)
10	1"	2.55	41.8	3000 psi (207 bar)
12	1 ¼"	3.19	52.2	3000 psi (207 bar)
15	1 ½"	3.83	62.7	3000 psi (207 bar)
17	1 ¾"	4.46	73.1	3000 psi (207 bar)
20	2"	5.10	83.6	2500 psi (172 bar)
22	2 ¼"	5.74	94.0	2500 psi (172 bar)
25	2 ½"	6.38	104.5	2500 psi (172 bar)

Box 8 Shaft Type *(type 1 unless noted)*

For single, tandem, or two-piece shaft unless noted.

07	SAE "C" 14 tooth spline 1.25" dia., ANSI 32-4
11	SAE "C" keyed 1.25" dia., 5/16"X15/32"X1 ½" key, ANSI 32-1
22	050-050, 051-051 piggyback shaft
23	075-050, 076-051 piggyback shaft
25	SAE "B" 13 tooth spline .88" dia., ANSI 22-4
43	SAE "B-B" keyed 1.00" dia. ¼"X3/8"X1 ¼" key, ANSI 25-1
53	SAE "C" 14 tooth spline 1.25" dia., ANSI-32-4, **type 2** (single & tandem)
65	SAE "B" 13 tooth spline .88" dia., ANSI 22-4, **type 2** (single & tandem)
67	SAE "B-B" keyed 1.00 dia., ¼"X3/8"X1 ¼" key, ANSI 25-1, **type 2** (single & tandem)
73	SAE "C" keyed 1.25" dia., 5/16" x 15/32" x 2 ¼" key, extended length (two-piece only)
98	SAE "B-B" 15 tooth spline, 1.00" dia., ANSI 25-4 (single & tandem)

Box 9 Bearing Carriers Pump Only

Common Inlet Passage

IN	OUT	CW	CCW
		C	D
-	-	A	U

* 051 Series only. Used when only one adjacent gear housing has an inlet port.

NPT Porting (050 Series only)

1"	-	TB	BT
1 ¼"	-	VB	BV
1 ½"	-	WB	BW
1"	¾"	TX	XT
1 ¼"	¾"	VX	XV
1 ½"	¾"	WX	XW
1 ¼"	1"	VZ	ZV
1 ½"	1"	WZ	ZW
1"	¾"	TJ	JT
1 ¼"	¾"	VJ	JV
1 ¼"	1"	VK	KV
1 ½"	1"	WK	KW
1"	¾"	ZX	XZ

ODT Porting

1"	-	CB	BC
1 ¼"	-	DB	BD
1 ½"	-	FB	BF
-	¾"	PJ	*JP
1"	¾"	CJ	JC
1 ¼"	¾"	DJ	JD
1 ½"	¾"	FJ	JF
1 ¼"	1"	DK	KD
1 ½"	1"	FK	KF
1"	¾"	CR	RC
1 ¼"	¾"	DR	RD
* 1 ½"	¾"	FR	RF
1 ¼"	1"	DS	SD
1 ½"	1"	FS	SF
-	1"	HZ	*ZH
1"	¾"	KJ	JK

* 051 Series only.

Split Flange Porting

IN	OUT	CW	CCW
1"	-	LB	BL
1 ¼"	-	MB	BM
1 ½"	-	NB	BN
-	¾"	BR	RB
1"	¾"	LR	RL
1 ¼"	¾"	MR	RM
1 ½"	¾"	NR	RN
1 ¼"	1"	MS	SM
1 ½"	1"	NS	SN
1"	¾"	LX	XL
1 ¼"	¾"	MX	XM
1 ¼"	1"	MZ	ZM
1 ½"	1"	NZ	ZN
1"	¾"	SR	RS

BSPP Porting

1"	-	CX	XC
1 ¼"	-	DX	XD
1 ½"	-	FX	XF
* -	¾"	-	TL
1"	¾"	CT	TC
1 ¼"	¾"	DT	TD
1 ½"	¾"	FT	TF
1 ¼"	1"	DV	VD
1 ½"	1"	FV	VF
1"	¾"	GM	MG
1 ¼"	¾"	HM	MH
1 ½"	¾"	WM	MW
1 ¼"	1"	HN	NH
1 ½"	1"	WN	NW
1"	¾"	PN	NP

* 050 Series only.

NOTE
Split flange thread depths may be more shallow than S.A.E. standard. Contact Product Support Department for actual dimensions.

Bearing Carriers (9) Pump Only - *continued*

Metric Split Flange Porting

IN	OUT	CW	CCW
1"	-	CH	HC
1 ¼"	-	DH	HD
1 ½"	-	FH	HF
-	¾"	PW	WP
1"	¾"	CW	WC
1 ¼"	¾"	DW	WD
1 ½"	¾"	FW	WF
1 ¼"	1"	DC	CD
1 ½"	1"	FC	CF
1"	¾"	GQ	QG
1 ¼"	¾"	HQ	QH
1 ½"	¾"	WQ	QW
1 ¼"	1"	HS	SH
1 ½"	1"	WS	SW
1"	¾"	ST	TS

Metric Straight Thread Porting

IN	OUT	CW	CCW
1"	-	CL	LC
1 ¼"	-	DL	LD
1 ½"	-	FL	LF
1"	¾"	CZ	ZC
1 ¼"	¾"	DZ	ZD
1 ½"	¾"	FZ	ZF
1 ¼"	1"	DN	ND
1 ½"	1"	FN	NF
1"	¾"	GT	TG
1 ¼"	¾"	HT	TH
1 ½"	¾"	WT	TW
1 ¼"	1"	HV	VH
1 ½"	1"	WV	VW
1"	¾"	KL	LK

Box 9 Bearing Carriers (Motor Only)

No Ports

IN	OUT	DUAL
-	-	B

NPT Porting (030 Series only)

1"	1"	TT
1 ¼"	1 ¼"	VV
1 ½"	1 ½"	WW

ODT Porting

1"	1"	CC
1 ¼"	1 ¼"	BB
1 ½"	1 ½"	FF

Split Flange Porting

1"	1"	LL
1 ¼"	1 ¼"	MM
1 ½"	1 ½"	NN

BSPP Porting

IN	OUT	DUAL
1"	1"	EE
1 ¼"	1 ¼"	GG

Metric Split Flange Porting

1"	1"	RR
1 ¼"	1 ¼"	SS

Metric Straight Thread Porting

1"	1"	KK
1 ¼"	1 ¼"	JJ

Box 10 Connecting Shaft

For connecting tandem units.

1	Connecting Shaft - Multiple Units
22	Piggyback Pump Connecting Shaft for 050 to 050, 051 to 051
23	Piggyback Pump Connecting Shaft for 075 to 050, 076 to 051

Parker Hannifin Corporation
Gear Pump Division
Kings Mountain, North Carolina USA

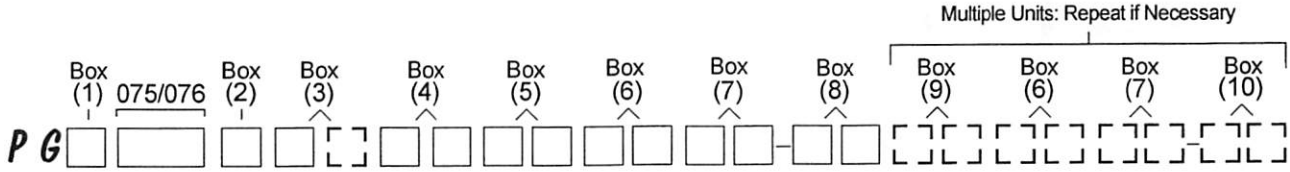

Box 1 Pump/Motor

P	Pump
M	Motor

Box 2 Unit

A	Single Unit
B	Tandem Unit
C	Single or Tandem w/ two-piece shaft (O.B. bearing required)

Box 3 Shaft End Cover

1	Pump, cw w/o O.B. bearing
2	Pump, ccw w/o O.B. bearing
3	Pump, bi-rotational w/o O.B. bearing (075 series only)
4	Pump, cw with O.B. bearing
5	Pump, ccw with O.B. bearing
6	Pump, bi-rotational w/ O.B. bearing (075 series only)
8	Motor, bi-rot. with O.B. bearing + ¼" NPT drain
9	Motor, bi-rot. w/o O.B. bearing + ¼" NPT drain
18	Motor, bi-rot. with O.B. bearing + ¼" BSPP drain
19	Motor, bi-rot. w/o O.B. bearing + ¼" BSPP drain

Box 4 Shaft End Cover *(type 1 only)*

42	SAE 4 bolt "B" ANSI 101-4: Port dia. 4"
78	SAE 4 bolt "C" ANSI 127-4: Port dia. 5"
80	SAE 4 bolt "D" ANSI 152-4: Port dia. 6"
98	SAE 2 bolt "C" ANSI 127-2: Port dia. 5"

(Rear Ported)

		CW	CCW	Double
Unported				
-	-	**BE**	**BI**	**BY**
O.D.T. Porting				
1"	1"	**JE**	**JI**	**JY**
Metric Straight Thread				
1"	1"	**TE**	**TI**	**TY**
Piggyback Port End - Pump Only				
Type 075-050, 076-051 & 075-030, 076-031		**KO**	**LO**	**MO**

For All Units

To determine direction of shaft rotation, view the unit with the shaft pointing toward you, and the idler (driven) gear beneath the shaft. With clockwise rotation, flow will be left to right. The inlet pump port will be on the left, outlet on the right. The flow is in the opposite direction with counter-clockwise rotation. Inverting the pump will reverse the inlet and outlet ports but not the direction of rotation.

Gear Housing (6)

				075 Series								075/076 Series		076 Series					
Housing Code				07	10	12	15	17	20	22	25	27	30	10	12	15	17	20	22	25
Displacement (C.I.R.)				3.07	4.1	5.12	6.15	7.17	8.2	9.22	10.25	11.275	12.3	4.1	5.12	6.15	7.17	8.2	9.22	10.25
Maximum (PSI)				2500	2500	2500	2500	2500	2500	2250	2250	2000	2000	3000	3000	3000	3000	2500	2500	2500
IN	**OUT**	**CW**	**CCW**																	***No Porting***
-	-	AB	AB	X	X	X	X	X	X	X	X	X	X	X	X	X	X	X	X	
																				NPT Porting
¾"	-	IC	ID	X	X	X	X													
-	¾"	ID	IC	X	X	X	X													
1"	¾"	IJ	IG		X	X	X													
1"	-	YC	YD			X	X		X											
-	1"	YD	YC			X	X		X											
1"	1"	YF	YF		X	X														
1 ¼"	1"	YJ	YG			X	X													
1 ¼"	1 ¼"	YL	YL			X	X	X												
																				OD Tube Porting
¾"	-	EC	ED	X	X	X	X													
1"*	¾"	EJ	EG	X*		X	X							2500*						
1 ¼"*	¾"	EK	EH		X*										X*					
1"*	-	AC	AD			X	X								2500	X				
-	1"	AD	AC			X	X								2500	X				
1"	1"	AF	AF		2000	X	X	X	X						2500	X				
1 ¼"*	1"	AJ	AG		2000*	X*									2500*	X*				
1 ½"*	1"	AK	AH				X*									X*				
1 ¼"	1 ¼"	AL	AL				2000	2000	2000	X	X		X/-							
1 ½"*	1 ¼"	AP	AM				2000*	2000*												
1 ½"	1 ½"	AR	AR							X	X									
																				Split Flange Porting
¾"	-	UC	UD	X	X	X	X													
-	¾"	UD	UC	X	X	X	X													
1"	¾"	UJ	UG	X	X	X	X	X	X					X						
1"	-	OC	OD		X	X	X	X	X											
-	1"	OD	OC		X	X	X	X	X											
1"	1"	OF	OF		X	X	X	X	X		X	X/-	X/-	X	X	X	X	X		
1 ¼"*	1"	OJ	OG		2000*	X	X	X	X	X	X		-/X	X*	X*					
1 ½"*	1"	OK	OH			X*	X*	X*	X	X					X*	X*	X*			
1 ¼"	-	OA	OB			X	X	X	X	X	X									
-	1 ¼"	OB	OA			X	X	X	X	X	X									
1 ¼"	1 ¼"	OL	OL		2000	X	X	X	X	X	X	X/X	X/X		2500	X	X	X	X	
1 ½"*	1 ¼"	OP	OM			X*	X*	X*	X	X	X	X	X		2500*	X*	X*	X		
1 ½"	-	OE	OU						X	X	X	X	X					X		
-	1 ½"	OU	OE						X	X	X	X	X					X		
1 ½"	1 ½"	OR	OR				2000	2000	X	X	X	X/X	X					X	X	
2"*	1"	UQ	-						X*											
2"*	1 ¼"	OQ	ON					X*	X*	X*	X*	X/X	X/X				X*	X*	X*	
2"*	1 ½"	OV	OS					2000*	X*	X*	X*	X/X	X/X					X*	X*	
2"	2"	OX	OX								X	X/X	X/X							
2 ½"*	1 ¼"	US	UN								X*									
2 ½"*	1 ½"	OW	OT								X*	X*/X*	X*/X*						X*	
2 ½"*	2"	OZ	OY										X*/-							

*** This porting is acceptable for low pressure inlet port only.**

NOTES
1. NPT ports are not recommended for use at pressures in excess of 1500 PSI.
2. Shaded cells are acceptable for motor codes.
3. "X" Means both codes are available.
4. "2000" or "2500" indicates maximum pressure rating on port.

Parker Hannifin Corporation
Gear Pump Division
Kings Mountain, North Carolina USA

Gear Housing (6) *continued*

				075 Series								075/076 Series		076 Series					
Housing Code				07	10	12	15	17	20	22	25	27	30	10	12	15	17	20	22	25
Displacement (C.I.R.)				3.07	4.1	5.12	6.15	7.17	8.2	9.22	10.25	11.275	12.3	4.1	5.12	6.15	7.17	8.2	9.22	10.25
Maximum (PSI)				2500	2500	2500	2500	2500	2500	2250	2250	2000	2000	3000	3000	3000	3000	2500	2500	2500
IN	OUT	CW	CCW																	***BSPP Porting***
¾"	-	YN	YQ	X	X	X	X		X					X	X	X				
-	¾"	YQ	YN	X	X	X	X		X					X	X	X				
¾"	¾"	YS	YS											X						
1"*	¾"	YV	YT	X*	X*	X	X		X					X*	X*	X		X		
1"*	-	SL	RQ			X	X	X	X		X			X*	X*	X			X	
-	1"	RQ	SL			X	X	X	X		X					X			X	
1"	1"	MP	MP		2000	X	X								2500	X	X			
1 ¼"*	1"	IX	VY		2000*	X*	X*		X	X			X/-		2500*	X*		X*		
1 ¼"*	-	NJ	UI			X*													X	
-	1 ¼"	UI	NJ																X	
1 ¼"	1 ¼"	PF	PF				2000	2000	X		X		-/X					X	X	
1 ½"*	1"	VI	HW				X*	X*	X*							X*				
1 ½"*	1 ¼"	IS	IQ				2000*	2000*	X*									X*		
																				Metric Straight Thread
¾"	-	EN	TQ	X	X	X	X							X	X	X				
-	¾"	TQ	EN	X	X	X	X							X	X	X				
1"*	¾"	EV	ET	X*		X	X								X*	X				
1"*	-	NL	ER												X*	X				
-	1"	ER	NL			X	X								2500	X				
1"	1"	CM	CM		2000	X	X								2500	X				
																				Metric Split Flange Porting
¾"	-	VN	VQ	X	X	X	X													
-	¾"	VQ	VN	X	X	X	X													
1"	¾"	RV	VT	X	X	X	X	X	X					X						
1"	-	UL	UR		X	X	X	X	X											
-	1"	UR	UL		X	X	X	X	X											
1"	1"	UM	UM		X	X	X	X	X					X	X	X	X			
1 ¼"*	1"	UX	VU		X*	X	X	X	X	X	X			X*	X*					
1 ½"*	1"	VO	HO			X*	X*								X*	X*				
1 ¼"	-	NO	UO			X	X	X	X	X	X									
-	1 ¼"	UO	NO			X	X	X	X	X	X									
1 ¼"	1 ¼"	PO	PO			X	X	X	X	X	X	X/X	X/X		2500	X	X	X	X	
1 ½"*	1 ¼"	SO	QO				X*	X*	X	X	X	X	X		2500*	X*	X*			
1 ½"*	-	UY	TO						X	X	X	X	X				X*	X		
-	1 ½"	TO	UY						X	X	X	X	X					X		
1 ½"	1 ½"	SV	SV					2000	X	X	X	X/X*	X/X*					X	X	
2"*	1 ¼"	JM	JR					X*	X*	X*	X*	-/X*	-/X*				X*	X*	X*	
2"*	1 ½"	JQ	JN					2000*	X*	X*	X*	X/X	X/X					X*	X*	
2"	2"	JS	JS									-/X	X/X							
2 ½"*	1 ½"	LJ	JX									X*/X*	X*/X*						X*	

***This porting is acceptable for low pressure inlet port only.**

NOTES
1. Shaded cells are acceptable for motor codes.
2. "X" Means both codes are available.
3. "2000" or "2500" indicates maximum pressure rating on port.

Box 7 Gear Width

075 Series

	Gear Width	in.³/rev.	cm³/rev.	Max Pressure
07	¾"	3.08	50.4	2500 psi (172 bar)
10	1"	4.10	67.2	2500 psi (172 bar)
12	1 ¼"	5.13	84.0	2500 psi (172 bar)
15	1 ½"	6.15	100.8	2500 psi (172 bar)
17	1 ¾"	7.18	117.6	2500 psi (172 bar)
20	2"	8.20	134.4	2500 psi (172 bar)
22	2 ¼"	9.23	151.2	2250 psi (155 bar)
25	2 ½"	10.25	168.0	2250 psi (155 bar)
27	2 ¾"	11.28	184.8	2000 psi (138 bar)
30	3"	12.30	201.6	2000 psi (138 bar)

076 Series

	Gear Width	in.³/rev.	cm³/rev.	Max Pressure
07	¾"	3.08	50.4	3000 psi (207 bar)
10	1"	4.10	67.2	3000 psi (207 bar)
12	1 ¼"	5.13	84.0	3000 psi (207 bar)
15	1 ½"	6.15	100.8	3000 psi (207 bar)
17	1 ¾"	7.18	117.6	3000 psi (207 bar)
20	2"	8.20	134.4	2500 psi (172 bar)
22	2 ¼"	9.23	151.2	2500 psi (172 bar)
25	2 ½"	10.25	168.0	2500 psi (172 bar)
27	2 ¾"	11.28	184.8	2000 psi (138 bar)
30	3"	12.30	201.6	2000 psi (138 bar)

Box 8 Shaft Type

For single, tandem, or two-piece shaft unless noted.

07	SAE "C" 14 tooth spline 1.25" dia., ANSI 32-4
11	SAE "C" keyed 1.25" dia., 5/16"X15/32"X1 ½" key, ANSI 32-1

Box 9 Bearing Carriers (Pump Only)

Common Inlet Passage

		C	D
-	-		
* -	-	A	U

* 076 Series only. Used when only one adjacent gear housing has an inlet port.

Box 9 Bearing Carriers (Motor Only)

No Ports

IN	OUT	DUAL
-	-	B

ODT Porting

1"	1"	CC
1 ¼"	1 ¼"	BB

Split Flange Porting

* 1"	1"	LL
1 ¼"	1 ¼"	MM
1 ½"	1 ½"	NN

* 076 Series only.

BSPP Porting

1"	1"	EE
1 ¼"	1 ¼"	GG
1 ½"	1 ½"	HH

Metric Split Flange Porting

IN	OUT	DUAL
1"	1"	RR
1 ¼"	1 ¼"	SS
1 ½"	1 ½"	XX

Metric Straight Thread Porting

1"	1"	KK
1 ¼"	1 ¼"	JJ
1 ½"	1 ½"	ZZ

Box 10 Connecting Shaft

For connecting tandem units.

1	Connecting Shaft - Multiple Units
23	Piggyback Pump Connecting Shaft for 075 to 075

NOTE
Split flange thread depths may be more shallow than S.A.E. standard. Contact Product Support Department for actual dimensions.

Parker Hannifin Corporation
Gear Pump Division
Kings Mountain, North Carolina USA

Notes

Parker Hannifin Corporation
Gear Pump Division
Kings Mountain, North Carolina USA

Performance Data

Performance data shown are the average results based on a series of laboratory tests of production units and are not necessarily representative of any one unit. Tests were run with the oil reservoir temperature at 120°F and viscosity 150 SSU at 100°F. Requests for more specific data should be directed to our Product Support Department through our sales representatives.

PGP030/031

Flow data at 2500 PSI (172 bar) unless noted.

Speed RPM	Gear Width Output *(gpm/lpm)*				
	1"	1 ¼"	1 ½"	1 ¾"	2"
900	6.5	8	10	12	13.5
	24.5	30	38	45.5	51
1200	9	11.5	14	16	18.5
	34	43.5	53	60.5	70
1500	11.5	14.5	17.5	20.5	23.5
	43.5	55	66	77.5	89
1800	14	18	21.5	25	29
	53	68	81.5	94.5	110
2100	16.5	21	25	29.5	34
	62.5	79.5	94.5	112	129
2400	19	24	29	34	39
	72	91	110	129	148

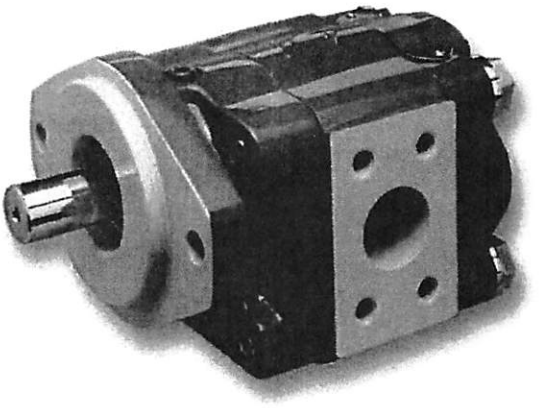

PGP050/051

Flow data at 2500 PSI (172 bar) unless noted.

Speed RPM	Gear Width Output *(gpm/lpm)*						
	1"	1 ¼"	1 ½"	1 ¾"	2"	2 ¼"	2 ½"
900	8.5	10.5	13	15	17.5	20	22
	32	39.5	49	57	66	75.5	83.5
1200	12	15	18	21	24	27	30
	45.5	57	68	79.5	91	102	114
1500	15	19	23	27	31	35	39
	57	72	87	102	117	132	148
1800	18	23	27.5	32.5	37.5	42	47
	68	87	104	123	142	159	178
2100	21.5	27	32.5	38.5	44	49.5	55
	81.5	102	123	146	167	187	208
2400	25	31	37	44	51	57	63.5
	94.5	117	140	167	193	216	240

PGP075/076

Flow data at 2500 PSI (172 bar) unless noted.

Speed RPM	Gear Width Output *(gpm/lpm)*								
	1"	1 ¼"	1 ½"	1 ¾"	2"	2 ¼"	2 ½"	2 ¾"*	3"*
900	11.5	15.5	19.5	23	27	30.5	34.5	38	42
	43.5	58.5	74	87	102	115.5	130.5	144	159
1200	17	22	27	32	37.5	42	48	52.5	58
	64.5	83.5	102	121	142	159	182	199	220
1500	22	29	35.5	41.5	48	54.5	61	67	74
	83.5	110	134	157	182	206	231	254	280
1800	27.5	35.5	43.5	51	59	66	74	81.5	90
	104	134	165	193	223	250	280	308	341
2100	33	42	51.5	60	69.5	78	87	96.5	106
	125	159	195	227	263	295	329	365	401
2400	38	49	59.5	70	80	90	101	111	122
	144	185	225	265	303	341	382	420	462

*Flow data at 2000 PSI (138 bar) rated pressure.

PL FACTOR

Each section of a multiple pump or motor should be regarded as a single unit with corresponding delivery and power input requirements. Since the entire input horsepower is fed through a common drive shaft, the power delivered to or from the unit is limited by the physical strength of the shaft. This limit is defined as a "PL" factor; "P" being the operating pressure and "L" the summation of gear widths.

In multiple units the "PL" must be calculated for the first connecting shaft as well as the drive shaft. Each style or type of shaft has a unique "PL" factor as noted in the table below.

PGP030/031

Input power at 2500 PSI (172 bar) unless noted.

Speed RPM	Gear Width Inches (HP/kW)				
	1"	1 ¼"	1 ½"	1 ¾"	2"
900	14	17	20	23	25
	11	13	15	17	19
1200	19	22	26	30	33
	14	17	20	22	25
1500	23	28	33	37	42
	17	21	24	27	31
1800	27	33	39	44	50
	20	25	29	33	37
2100	32	38	45	51	58
	24	29	34	38	43
2400	36	44	51	58	66
	26	33	38	43	49

PGP050/051

Input power at 2500 PSI (172 bar) unless noted.

Speed RPM	Gear Width Inches (HP/kW)						
	1"	1 ¼"	1 ½"	1 ¾"	2"	2 ¼"	2 ½"
900	19	22	26	30	34	38	42
	14	17	20	23	26	29	32
1200	25	30	34	40	45	51	56
	18	22	26	30	34	38	42
1500	31	37	43	50	56	63	69
	23	27	32	37	42	47	51
1800	36	44	51	59	67	75	82
	27	33	38	44	50	56	61
2100	42	51	60	69	78	87	96
	31	38	44	51	58	65	72
2400	47	57	68	79	89	99	110
	35	43	51	59	66	74	82

PGP075/076

Input power at 2500 PSI (172 bar) unless noted.

Speed RPM	Gear Width Inches (HP/kW)								
	1"	1 ¼"	1 ½"	1 ¾"	2"	2 ¼"	2 ½"	2 ¾"*	3"*
900	26	32	39	45	51	58	64	57	62
	19	24	29	34	38	43	48	42	46
1200	35	43	52	60	69	78	86	76	83
	26	32	39	45	51	58	64	57	62
1500	44	55	65	76	87	98	109	96	105
	33	41	49	57	65	73	81	72	78
1800	53	66	79	93	106	119	132	116	127
	39	49	59	69	79	89	99	87	95
2100	62	77	93	108	124	139	154	136	148
	46	58	69	81	92	104	115	101	111
2400	71	88	106	124	141	159	176	155	169
	53	66	79	92	105	118	132	116	126

*Input power at 2000 PSI (138 bar).

Pressure X Total Gear Width = PL

PL MUST NOT EXCEED NUMBER SHOWN FOR APPROPRIATE SHAFT.

PL Chart		
Shaft Style	**Integral Shaft & Gear**	**Two Piece Style**
030/031		
SAE "A" Spline	2,600	2,600
SAE "B" Spline	7,900	5,850
SAE "B" Key	4,850	4,850
SAE "BB" Spline	12,150	--
SAE "BB" Key	7,250	5,850
SAE "C" Spline	--	5,850
Connecting Shaft	--	5,850
050/051		
SAE "B" Spline	6,100	6,100
SAE "B-B" Spline	9,400	--
SAE "B-B" Key	5,600	5,600
SAE "C" Spline	12,900	8,500
SAE "C" Key	10,900	8,500
Connecting Shaft	--	8,500
075/076		
SAE "C" Single	8,000	8,000
SAE "C" Tandem	12,500	--
SAE "C" Key	7,500	7,500
Connecting Shaft	--	10,000

Parker Hannifin Corporation
Gear Pump Division
Kings Mountain, North Carolina USA

PGM030

Motor performance data at 2000 PSI (138 bar).

Speed	1" Gear			1 ½" Gear			2" Gear		
	Output		Input	Output		Input	Output		Input
RPM	Torque	Power	Flow	Torque	Power	Flow	Torque	Power	Flow
800	550	7	9	870	11	13	1150	14.5	17
	62	5	34	98.5	8	49	130	11	64.5
1200	550	10.5	13	870	16.5	18	1150	22	23.5
	62	8	49	98.5	12.5	68	130	16.5	89
1600	550	14	16	860	22	23	1140	29	30.5
	62	10.5	60.5	97	16.5	87	129	21.5	115
2000	550	17.5	19.5	850	27	28	1125	36	37
	62	13	74	96	20	106	127	27	140

U.S./Metric Torque: **In.-lbs.** / Nm Flow: **GPM** / LPM Power: **HP** / kW

PGM050

Motor performance data at 2000 PSI (138 bar).

Speed	1" Gear			1 ½" Gear			2" Gear			2½" Gear		
	Output		Input	Output		Input	Output		Input	Output		Input
RPM	Torque	Power	Flow	Torque	Power	Flow	Torque	Power	Flow	Torque	Power	Flow
800	670	8.5	10.5	1070	13.5	15.5	1450	18	21	1850	23.5	26
	75.5	6.5	39.5	121	10	58.5	164	13.5	79.5	209	17.5	98.5
1200	680	13	15.5	1075	20.5	22.5	1450	27.5	30.5	1840	35	37.5
	77	9.5	58.5	121.5	15	85	164	20.5	115	208	26	142
1600	670	17	20	1045	26.5	30	1440	36.5	40	1750	44.5	49.5
	75.5	12.5	75.5	118	20	114	162.5	27	151	197.5	33	187
2000	660	21	25	1030	32.5	37	1415	44.5	49	1720	54.5	61.5
	74.5	15.5	94.5	116.5	24	140	160	33	185	194.5	40.5	233

U.S./Metric Torque: **In.-lbs.** / Nm Flow: **GPM** / LPM Power: **HP** / kW

PGM075

Motor performance data at 2000 PSI (138 bar).

Speed	1" Gear			1 ½" Gear			2" Gear			2½" Gear			3" Gear		
	Output		Input	Output		Input	Output		Input	Output		Input	Output		Input
RPM	Torque	Power	Flow	Torque	Power	Flow	Torque	Power	Flow	Torque	Power	Flow	Torque	Power	Flow
800	1050	13.5	20.5	1650	21	28	2200	28	35.5	2875	36.5	43	3625	46	50.5
	118.5	10	77.5	186.5	15.5	106	248.5	21	134	325	27	163	409.5	34.5	191
1200	1025	19.5	27.5	1600	30.5	38	2200	42	49.5	2850	54	60.5	3575	68	72
	116	14.5	104	181	22.5	144	248.5	31.5	187	322	40.5	229	404	50.5	273
1600	1000	25.5	34	1575	40	49	2175	55	64	2800	71	78.5	3500	89	93
	113	19	129	178	30	185	245.5	41	242	316.5	53	297	395.5	66.5	352
2000	950	30	41.5	1550	49	59	2175	67.5	78	2750	87	96.5	3425	109	114
	107.5	22.5	157	175	36.5	223	245.5	50.5	295	310.5	65	365	387	81.5	431

U.S./Metric Torque: **In.-lbs.** / Nm Flow: **GPM** / LPM Power: **HP** / kW

Parker Hannifin Corporation
Gear Pump Division
Kings Mountain, North Carolina USA

PGM031

Motor performance data at 2500 PSI (172 bar).

Speed	1" Gear			1 ½" Gear			2" Gear		
	Output		Input	Output		Input	Output		Input
RPM	Torque	Power	Flow	Torque	Power	Flow	Torque	Power	Flow
800	675	8.5	9	1035	13	13	1385	17.5	17
	76.5	6.5	34	117	9.5	49	156.5	13	64.5
1200	685	13	13	1055	20	18	1410	27	23.5
	77.5	9.5	49	119	15	68	159.5	20	89
1600	680	17.5	16	1030	26	23	1390	35	30.5
	77	13	60.5	116.5	19.5	87	157	26	115
2000	660	21	19.5	1010	32	28	1370	43.5	37
	74.5	15.5	74	114	24	106	155	32.5	140

U.S./Metric Torque: **In.-lbs.** / Nm Flow: **GPM** / LPM Power: **HP** / kW

PGM051

Motor performance data at 2500 PSI (172 bar).

Speed	1" Gear			1 ½" Gear			2" Gear			2½" Gear		
	Output		Input	Output		Input	Output		Input	Output		Input
RPM	Torque	Power	Flow	Torque	Power	Flow	Torque	Power	Flow	Torque	Power	Flow
800	825	10.5	10.5	1310	16.5	15.5	1810	23	21	2330	29.5	26
	93	8	39.5	148	12.5	58.5	204.5	17	79.5	263.5	22	98.5
1200	850	16	15.5	1340	25.5	22.5	1830	35	30.5	2340	44.5	37.5
	96	12	58.5	151.5	19	85	207	26	115	264.5	33	142
1600	830	21	20	1330	34	30	1805	46	40	2300	58.5	49.5
	94	15.5	75.5	150.5	25.5	114	204	34.5	151	260	43.5	187
2000	800	25.5	25	1290	41	37	1770	56	49	2250	71.5	61.5
	90.5	19	94.5	146	30.5	140	200	42	185	254	53.5	233

U.S./Metric Torque: **In.-lbs.** / Nm Flow: **GPM** / LPM Power: **HP** / kW

PGM076

Motor performance data at 2500 PSI (172 bar) unless noted.

Speed	1" Gear			1 ½" Gear			2" Gear			2½" Gear			3" Gear*		
	Output		Input	Output		Input	Output		Input	Output		Input	Output		Input
RPM	Torque	Power	Flow	Torque	Power	Flow	Torque	Power	Flow	Torque	Power	Flow	Torque	Power	Flow
800	1410	18	20.5	2140	27	28	2875	36.5	35.5	3650	46.5	43	3625	46	50.5
	159.5	13.5	77.5	242	20	106	325	27	134	412.5	34.6	163	409.5	34.5	191
1200	1400	26.5	27.5	2140	41	38	2870	54.5	49.5	3650	69.5	60.5	3575	68	72
	158	20	104	242	30.5	144	324.5	40.5	187	412.5	52	229	404	50.5	273
1600	1375	35	34	2110	53.5	49	2830	72	64	3600	91.5	78.5	3500	89	93
	155.5	26	129	238.5	40	185	319.5	53.5	242	406.5	68	297	395.5	66.5	352
2000	1350	43	41.5	2090	66.5	59	2800	89	78	3500	111	96.5	3425	109	114
	152.5	32	157	236	49.5	223	316.5	66.5	295	395.5	83	365	387	81.5	431

*Motor performance data at 2000 PSI (138 bar).

U.S./Metric Torque: **In.-lbs.** / Nm Flow: **GPM** / LPM Power: **HP** / kW

Pumps and Motors (see drawings on page 23)

Model		A[1]	Bs[2][3]	Bm[3][4]	C[5][6]	D[5][7]	E[3]	F[2]	G	H	I	J	K	L[3][8]	M[4]
030/031	in.	1.62	5.44	8.69	5.44	5.88	2.94	0.75	1.75	2.50	0.88	2.69	5.38	3.31	3.25
	mm.	41.3	138.1	220.7	138.1	149.2	74.6	19.1	44.5	63.5	22.2	68.3	136.5	84.1	82.6
050/051	in.	2.19	5.88	9.50	5.44	5.88	3.38	0.75	1.75	2.88	1.00	3.00	6.00	3.75	3.62
	mm.	55.6	149.2	241.3	138.1	149.2	85.7	19.1	44.5	73.0	25.4	76.2	152.4	95.3	92.1
075/076	in.	2.19	6.75	10.75	7.75	7.94	3.75	1.00	2.00	3.00	1.25	3.94	7.88	4.75	4.00
	mm.	55.6	171.5	273.1	196.9	201.6	95.3	25.4	50.8	76.2	31.8	100.0	200.0	120.7	101.6

U.S./Metric

NOTES

1. Dimension will vary with shaft type
2. Dimension + gear width
3. Dimension is for Type 1 SEC. For Type 2: subtract 1.12" (28.4 mm) for 030/031: subtract 1.00" (25.4 mm) for 050/051.
4. Dimension + total gear width
5. Dimension will vary with port type. Subtract 0.25" (6.4 mm) for S.F. ports.
6. For 2.25" and 2.50" gear width in 050/051 series, dimention is 6.75" (171.5 mm).
7. Dimension is for wide B-C. Narrow B-C dimensions: 5.00" (127 mm) for 030/031 and 050/051; 7.19" (182.6 mm) for 075/076.
8. Dimension + ½ front section gear width

Approximate Weight: Pumps and Motors

Single Unit

Model	Unit Weight	1"	1 ¼"	1 ½"	1 ¾"	2"	2 ¼"	2 ½"	2 ¾"	3"
030/031	Pounds	33	34	35	36	37	-	-	-	-
	KG	15	15.5	16	16.5	17	-	-	-	-
050/051	Pounds	37	38.5	40	41.5	43	48.5	50	-	-
	KG	17	17.5	18	19	19.5	22	22.5	-	-
075/076	Pounds	72	75	77	80	82	85	87	90	92
	KG	33	34	35	36	37	39	40	41	42

Approximate Weight: Pumps and Motors

Multiple Unit*

Model	Add per gear section	1"	1 ¼"	1 ½"	1 ¾"	2"	2 ¼"	2 ½"	2 ¾"	3"
030/031	Pounds	27	28	29	31	32	-	-	-	-
	KG	12	12.5	13	14	14.5	-	-	-	-
050/051	Pounds	31	32.5	34	35.5	37	42.5	44	-	-
	KG	14	15	15.5	16	17	19	20	-	-
075/076	Pounds	59	62	64	67	69	72	74	77	79
	KG	27	28	29	31	32	33	34	35	36

*Determine the approximate weight from Single Unit chart and add weight of each additional assembly from this chart.

Single Unit - 030/031/050/051

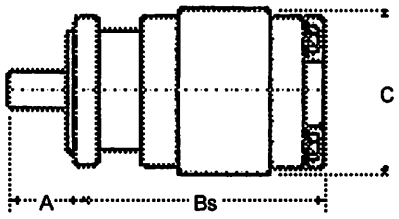

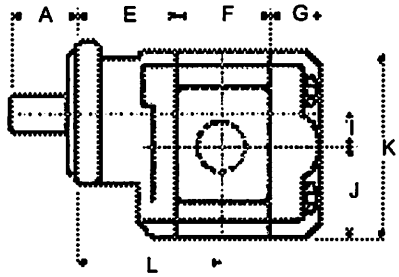

Single Unit - 075/076

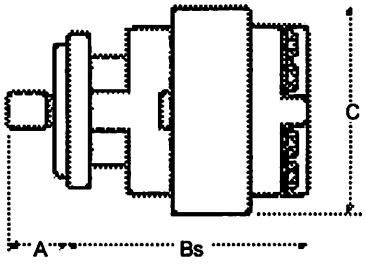

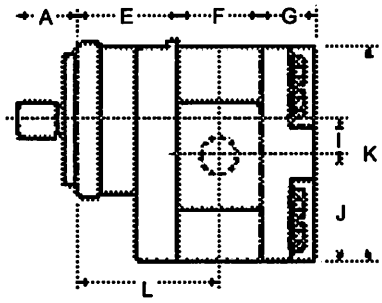

Multiple Unit - 030/031/050/051

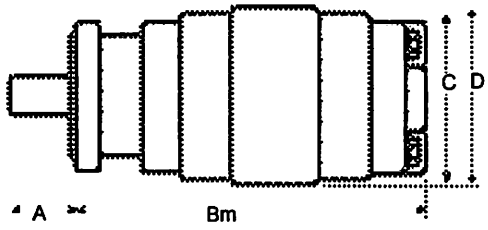

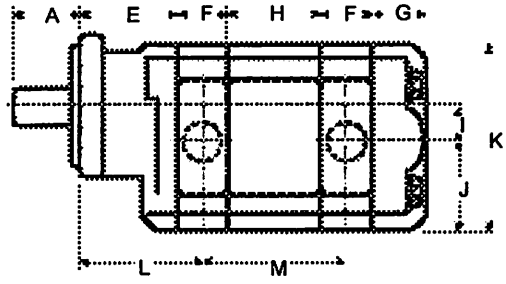

Multiple Unit - 075/076

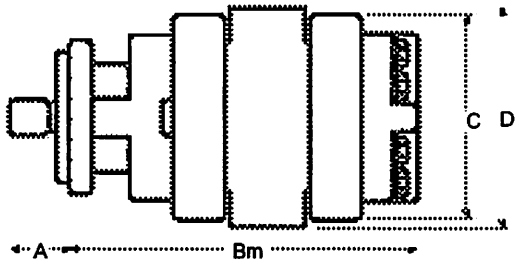

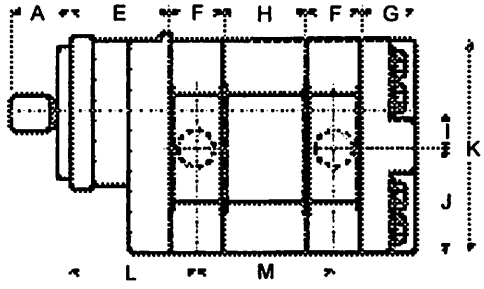

Offer of Sale

The items described in this document are hereby offered for sale at prices to be established by Parker Hannifin Corporation, its subsidiaries and its authorized distributors. This offer and its acceptance by any customer ("Buyer") shall be governed by all of the following Terms and Conditions. Buyer's order for any item described in its document, when communicated to Parker Hannifin Corporation, its subsidiary or an authorized distributor ("Seller") verbally or in writing, shall constitute acceptance of this offer.

1. Terms and Conditions of Sale: All descriptions, quotations, proposals, offers, acknowledgments, acceptances and sales of Seller's products are subject to and shall be governed exclusively by the terms and conditions stated herein. Buyer's acceptance of any offer to sell is limited to these terms and conditions. Any terms or conditions in addition to, or inconsistent with those stated herein, proposed by Buyer in any acceptance of an offer by Seller, are hereby objected to. No such additional, different or inconsistent terms and conditions shall become part of the contract between Buyer and Seller unless expressly accepted in writing by Seller. Seller's acceptance of any offer to purchase by Buyer is expressly conditional upon Buyer's assent to all the terms and conditions stated herein, including any terms in addition to, or inconsistent with those contained in Buyer's offer. Acceptance of Seller's products shall in all events constitute such assent.

2. Payment: Payment shall be made by Buyer net 30 days from the date of delivery of the items purchased hereunder. Any claims by Buyer for omissions or shortages in a shipment shall be waived unless Seller receives notice thereof within 30 days after Buyer's receipt of the shipment.

3. Delivery: Unless otherwise provided on the face hereof, delivery shall be made F.O.B. Seller's plant. Regardless of the method of delivery, however, risk of loss shall pass to Buyer upon Seller's delivery to a carrier. Any delivery dates shown are approximate only and Seller shall have no liability for any delays in delivery.

4. Warranty: Seller warrants that the item sold hereunder shall be free from defects in material or workmanship for a period of 547 days from the date of shipment to Buyer, or 3,000 hours of use, whichever expires first. **THIS WARRANTY COMPRISES THE SOLE AND ENTIRE WARRANTY PERTAINING TO ITEMS PROVIDED HEREUNDER. SELLER MAKES NO OTHER WARRANTY, GUARANTEE, OR REPRESENTATION OF ANY KIND WHATSOEVER. ALL OTHER WARRANTIES, INCLUDING BUT NOT LIMITED TO, MERCHANTABILITY AND FITNESS FOR PURPOSE, WHETHER EXPRESS, IMPLIED, OR ARISING BY OPERATION OF LAW, TRADE USAGE, OR COURSE OF DEALING ARE HEREBY DISCLAIMED.**

NOTWITHSTANDING THE FOREGOING, THERE ARE NO WARRANTIES WHATSOEVER ON ITEMS BUILT OR ACQUIRED WHOLLY OR PARTIALLY, TO BUYERS DESIGNS OR SPECIFICATIONS.

5. Limitation of Remedy: SELLER'S LIABILITY ARISING FROM OR IN ANY WAY CONNECTED WITH THE ITEMS SOLD OR THIS CONTRACT SHALL BE LIMITED EXCLUSIVELY TO REPAIR OR REPLACEMENT OF THE ITEMS SOLD OR REFUND OF THE PURCHASE PRICE PAID BY BUYER, AT SELLER'S SOLE OPTION IN NO EVENT SHALL SELLER BE LIABLE FOR ANY INCIDENTAL OR SEQUENTIAL OR SPECIAL DAMAGES OF ANY KIND OR NATURE WHATSOEVER, INCLUDING BUT NOT LIMITED TO LOST PROFITS ARISING FROM OR IN ANY WAY CONNECTED WITH THIS AGREEMENT OR ITEM SOLD HEREUNDER, WHETHER ALLEGED TO ARISE FROM BREACH OF CONTRACT, EXPRESS OR IMPLIED WARRANTY, OR IN TORT, INCLUDING WITHOUT LIMITATION, NEGLIGENCE, FAILURE TO WARN OR STRICT LIABILITY.

6. Changes, Reschedules and Cancellations: Buyer may request to modify the designs or specifications for the items sold hereunder as well as the quantities and delivery dates thereof, or may request to cancel all or part of this order, however, no such requested modification or cancellation shall become part of the contract between Buyer and Seller unless accepted by Seller in a written amendment to this Agreement. Acceptance of any such requested modification or cancellation shall be at Seller's discretion, and shall be upon such terms and conditions as Seller may require.

7. Special Tooling: A tooling charge may be imposed for any special tooling, including without limitation, dies, fixtures, molds and patterns, acquired to manufacture items sold pursuant to this contract. Such special tooling shall be and remain Seller's property notwithstanding payment of any charges by Buyer. In no event will Buyer acquire any interest in apparatus belonging to Seller which is utilized in the manufacture of the items sold hereunder, even if such apparatus has been specially converted or adapted for such manufacture and notwithstanding any charges paid by Buyer. Unless otherwise agreed, Seller shall have the right to alter, discard or otherwise dispose of any special tooling or other property in its sole discretion at any time.

8. Buyer's Property: Any designs, tools, patterns, materials, drawings, confidential information or equipment furnished by Buyer or any other items which become Buyer's property, may be considered obsolete and may be destroyed by Seller after two (2) consecutive years have elapsed without Buyer placing an order for the items which are manufactured using such property. Seller shall not be responsible for any loss or damage to such property while it is in Seller's possession or control.

9. Taxes: Unless otherwise indicated on the face hereof, all prices and charges are exclusive of excise, sales, use, property, occupational or like taxes which may be imposed by any taxing authority upon the manufacture, sale or delivery of the items sold hereunder. If any such taxes must be paid by Seller or if Seller is liable for the collection of such tax, the amount thereof shall be in addition to the amounts for the items sold. Buyer agrees to pay all such taxes or to reimburse Seller therefore upon receipt of its invoice. If Buyer claims exemption from any sales, use or other tax imposed by any taxing authority, Buyer shall save Seller harmless from and against any such tax, together with any interest or penalties thereon which may be assessed if the items are held to be taxable.

10. Indemnity For Infringement of Intellectual Property Rights: Seller shall have no liability for infringement of any patents, trademarks, copyrights, trade dress, trade secrets or similar rights except as provided in this Part 10. Seller will defend and indemnify Buyer against allegations of infringement of U.S. patents, U.S. trademarks, copyrights, trade dress and trade secrets (hereinafter 'Intellectual Property Rights'). Seller will defend at its expense and will pay the cost of any settlement or damages awarded in an action brought against Buyer based on an allegation that an item sold pursuant to this contract infringes the Intellectual Property Rights of a third party. Seller's obligation to defend and indemnify Buyer is contingent on Buyer notifying Seller within ten (10) days after Buyer becomes aware of such allegations of infringement, and Seller having sole control over the defense of any allegations or actions including all negotiations for settlement or compromise. If an item sold hereunder is subject to a claim that it infringes the Intellectual Property Rights of a third party, Seller may, at its sole expense and option, procure for Buyer the right to continue using said item, replace or modify said time so as to make it noninfringing, or offer to accept return of said item and return the purchase price less a reasonable allowance for depreciation. Notwithstanding the foregoing Seller shall have no liability for claims of infringement based on information provided by Buyer, or directed to items delivered hereunder for which the designs are specified in whole or part by Buyer, or infringements resulting from the modification, combination or use in a system of any item sold hereunder. The foregoing provisions of this Part 10 shall constitute Seller's sole and exclusive liability and Buyer's sole and exclusive remedy for infringement of Intellectual Property Rights.

If a claim is based on information provided by Buyer or if the design for an item delivered hereunder is specified in whole or in part by Buyer, Buyer shall defend and indemnify Seller for all costs, expenses or judgments resulting from any claim that such item infringes any patent, trademark, copyright, trade dress, trade secret or any similar right.

11. Force Majeure: Seller does not assume the risk of and shall not be liable for delay or failure to perform any of Seller's obligations by reason of circumstances beyond the reasonable control of Seller (hereinafter 'Events of Force Majeure'). Events of Force Majeure shall include without limitation, accidents, acts of God, strikes or labor disputes, acts, laws, rules or regulations of any government or government agency, fires, floods, delays or failures in delivery of carriers or suppliers, shortages of materials and any other cause beyond Seller's control.

12. Entire Agreement/Governing Law: The terms and conditions set forth herein, together with any amendments, modifications and any different terms or conditions expressly accepted by Seller in writing, shall constitute the entire Agreement concerning the items sold, and there are no oral or other representations or agreements which pertain thereto. This Agreement shall be governed in all respects by the law of the State of Ohio. No actions arising out of the sale of the items sold hereunder or this Agreement may be brought by either party more than two (2) years after the cause of action accrues.

Parker Hannifin Corporation
6035 Parkland Blvd.
Cleveland, Ohio 44124-4141
Telephone: (216) 896-3000
Fax: (216) 896-4000
Web site: www.parker.com

Parker Hannifin Corporation

About Parker Hannifin Corporation

Parker Hannifin is a leading global motion-control company dedicated to delivering premier customer service. A Fortune 500 corporation listed on the New York Stock Exchange (PH), our components and systems comprise over 1,400 product lines that control motion in some 1,000 industrial and aerospace markets. Parker is the only manufacturer to offer its customers a choice of hydraulic, pneumatic, and electromechanical motion-control solutions. Our Company has the largest distribution network in its field, with over 7,500 distributors serving more than 350,000 customers worldwide.

Parker's Charter

To be a leading worldwide manufacturer of components and systems for the builders and users of durable goods. More specifically, we will design, market and manufacture products controlling motion, flow and pressure. We will achieve profitable growth through premier customer service.

Product Information

North American customers seeking product information, the location of a nearby distributor, or repair services will receive prompt attention by calling the Parker Product Information Center at our toll-free number: 1-800-C-PARKER (1-800-272-7537). In the UK, a similar service is available by calling 0500-103-203.

The Aerospace Group is a leader in the development, design, manufacture and servicing of control systems and components for aerospace and related high-technology markets, while achieving growth through premier customer service.

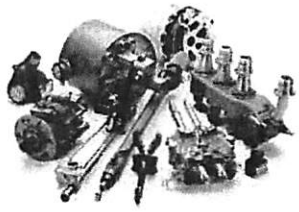

The Climate & Industrial Controls Group designs, manufactures and markets system-control and fluid-handling components and systems to refrigeration, air-conditioning and industrial customers worldwide.

The Fluid Connectors Group designs, manufactures and markets rigid and flexible connectors, and associated products used in pneumatic and fluid systems.

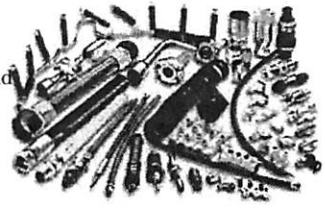

The Seal Group designs, manufactures and distributes industrial and commercial sealing devices and related products by providing superior quality and total customer satisfaction.

The Hydraulics Group designs, produces and markets a full spectrum of hydraulic compnents and systems to builders and users of industrial and mobile machinery and equipment.

The Filtration Group designs, manufactures and markets quality filtration and clarification products, providing customers with the best value, quality, technical support, and global availability.

The Automation Group is a leading supplier of pneu-matic and electro-mechanical components and systems to automation customers worldwide.

The Instrumentation Group is a global leader in the design, manufacture and distribution of high-quality critical flow components for worldwide processinstrumentation, ultra-high-purity, medical and analytical applications.

Sales Offices Worldwide

North America

Gear Pump Division Headquarters
101 Canterbury Road
Kings Mountain, NC 28086
phone 704 730 2000
fax 704 730 5832
toll free 888 700 7411

Gear Pump Division Facility
2701 Intertech Drive
Youngstown, OH 44509
phone 330 270 6000
fax 330 270 6185
toll free 888 700 7511

Catalog HY09-030/US, T&M, 5M 07/08

Parker Hannifin Corporation
Gear Pump Division
101 Caterbury Road
Kings Mountain, NC USA
www.parker.com

Your Local Authorized Parker Distributor

PGP/PGM300 Series
PGP/PGM400 Series

Cast Iron Bushing Design

Catalog HY09-0300/US

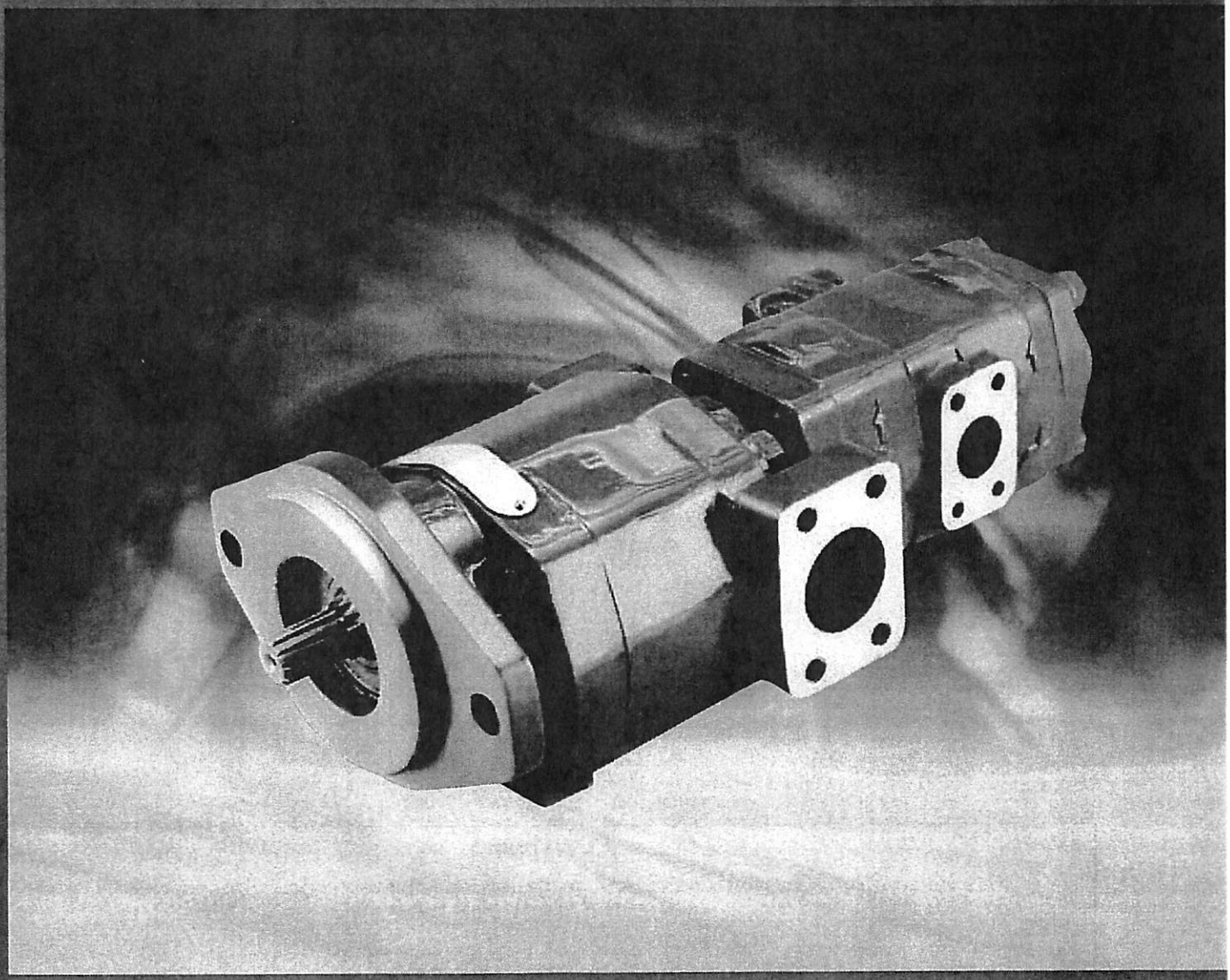

The Parker Hannifin Gear Pump Division Assures:

- Consistent quality
- Technical innovation
- Premier customer service

Worldwide Sales and Service

Parker operates sales and service centers in major industrial areas worldwide. Call 1-800-C-PARKER for more information, or for a synopsis of the Gear Pump Division, contact a Parker representative.

The Gear Pump Division's ability to engineer specialty products for unique applications has kept us at the forefront of technology, and ensured our position as the industry leader. Our success has come from providing a quality product with excellent sales and service support.

We manufacture hydraulic components for a wide range of industries including:

- Material Handling
- Construction
- Turf Care
- Forestry
- Agriculture
- Industrial

⚠ WARNING

FAILURE OR IMPROPER SELECTION OR IMPROPER USE OF THE PRODUCTS AND/OR SYSTEMS DESCRIBED HEREIN OR RELATED ITEMS CAN CAUSE DEATH, PERSONAL INJURY AND PROPERTY DAMAGE.

This document and other information from Parker Hannifin Corporation, its subsidiaries and authorized distributors provide product and/or system options for further investigation by users having technical expertise. It is important that you analyze all aspects of your application and review the information concerning the product or system in the current product catalog. Due to the variety of operating conditions and applications for these products or systems, the user, through its own analysis and testing, is solely responsible for making the final selection of the products and systems and assuring that all performance, safety and warning requirements of the application are met.

The products described herein, including without limitation, product features, specifications, designs, availability and pricing, are subject to change by Parker Hannifin Corporation and its subsidiaries at any time without notice.

Offer of Sale

The items described in this document are hereby offered for sale by Parker Hannifin Corporation, its subsidiaries or its authorized distributors. This offer and its acceptance are governed by the provisions stated in the "Offer of Sale".

© Copyright 2003, Parker Hannifin Corporation, All Rights Reserved.

PGP/PGM300 Series

Ordering Information 4
General Information 12
PL Factor 13
General Data 14
Porting 15
Drive Shaft 15
Performance Curves 16
Dimensional Data 17
PGP/PGM315 Series Pump Performance Data ... 18
PGP/PGM330 Series Pump Performance Data ... 19
PGP/PGM350 Series Pump Performance Data ... 20
PGP/PGM365 Series Pump Performance Data ... 21

PGP/PGM400 Series

Dimensional Data 22
Special Assemblies 24
Offer of Sale 26

PGP/PGM315 Series Coding

Tandem: Repeat if Necessary

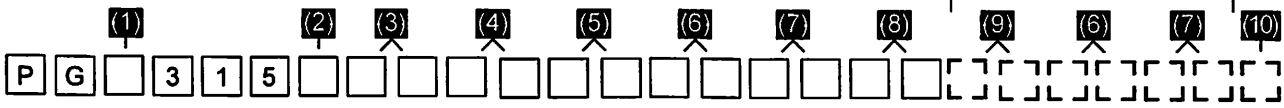

Pump/Motor (1)

P	Pump (PE for fluorocarbon seals)
M	Motor (no tandem motors available)

Unit (2)

A	Single Unit
B	Tandem Unit (flush studs)
L	Unit with Extended Studs

Shaft End Cover (3)

1	Pump, cw w/o O.B. bearing
2	Pump, ccw w/o O.B. bearing
4	Pump, cw with O.B. bearing (Code 490 Only)
5	Pump, ccw with O.B. bearing (Code 590 Only)
9	Motor, bi-rot w/o O.B. bearing + 1/4" ODT drain

Shaft End Cover (4)

89	SAE 2 bolt for clutch
90	4 bolt 72x100mm 80mm pilot
93	SAE "A" 2 bolt
95	Pad Mount for Clutch
96	SAE "B" 2 bolt

Gear Housing (6)

AB	Pump
EB	Motor

Port End Cover (5)

(Side Ported)

IN •	OUT •	CW •	CCW •
SAE Split Flange (pump)			
1"	3/4"	EJ	JE
1"	1/2"	EK	KE
3/4"	3/4"	EL	LE
3/4"	1/2"	EM	ME
1"	-	OE	EO
3/4"	-	OF	FO
-	3/4"	OJ	JO
-	1/2"	OL	LO
SAE Split Flange (motor)			
1"	1"	DR-Double	
3/4"	3/4"	DS-Double	
National Pipe Thread (pump)			
1-1/4"	1"	AJ	JA
1-1/4"	3/4"	AK	KA
1"	1"	AL	LA
1"	3/4"	AM	MA
3/4"	3/4"	AR	RA
National Pipe Thread (motor)			
1"	1"	DM-Double	
3/4"	3/4"	DN-Double	
1/2"	1/2"	DQ-Double	
Unported (pump)			
BI	Unported		
OD Tube Porting (pump)			
1-1/4"	1"	FB	BF
1-1/4"	7/8"	FC	CF
1-1/4"	3/4"	FG	GF
1-1/4"	5/8"	FJ	JF
1"	1"	FL	LF
1"	7/8"	FV	VF
1"	3/4"	FW	WF
1"	5/8"	FX	XF
7/8"	7/8"	FY	YF
7/8"	3/4"	FZ	ZF
7/8"	5/8"	BC	CB
7/8"	1/2"	BG	GB
3/4"	3/4"	BJ	JB
3/4"	5/8"	BL	LB
3/4"	1/2"	BN	NB
1 1/4"	-	BV	VB
1"	-	BW	WB
7/8"	-	BX	XB
3/4"	-	BY	YB
-	1"	BZ	ZB
-	7/8"	PD	DP
-	3/4"	PE	EP
-	5/8"	PM	MP
-	1/2"	PN	NP

(Side Ported) (cont.)

IN •	OUT •	CW •	CCW •
OD Tube Porting (motor)			
1"	1"	VN-Double	
3/4"	3/4"	VR-Double	
1/2"	1/2"	VQ-Double	
BSPP Porting (pump)			
1-1/4"	1"	FN	NF
1-1/4"	7/8"	FP	PF
1-1/4"	3/4"	FR	RF
1"	1"	FS	SF
1"	7/8"	FT	TF
1"	3/4"	BP	PB
7/8"	7/8"	BQ	QB
7/8"	3/4"	BR	RB
7/8"	1/2"	BT	TB
3/4"	3/4"	BU	UB
3/4"	1/2"	PQ	QP
1-1/4"	-	PR	RP
1"	-	PS	SP
7/8"	-	PT	TP
3/4"	-	PV	VP
-	1"	PW	WP
-	7/8"	PX	XP
-	3/4"	PY	YP
-	1/2"	PZ	ZP
BSPP Porting (motor)			
1"	1"	VY-Double	
3/4"	3/4"	VZ-Double	
1/2"	1/2"	VV-Double	
Metric Split Flange (pump)			
1"	3/4"	EV	VE
1"	1/2"	EW	WE
3/4"	3/4"	EX	XE
3/4"	1/2"	EY	YE
1"	0"	OP	PO
3/4"	0"	OR	RO
0"	3/4"	OT	TO
0"	1/2"	OV	VO
Metric Split Flange (motor)			
1"	1"	DV-Double	
3/4"	3/4"	DW-Double	

(Rear Ported)

IN •	OUT •	CW •	CCW •
OD Tube Porting (pump)			
1-1/4"	1"	UC	CU
1-1/4"	7/8"	UF	FU
1-1/4"	3/4"	UN	NU
1"	1"	UD	DU
1"	7/8"	UP	PU
1"	3/4"	UQ	QU
1"	5/8"	UR	RU
7/8"	7/8"	LN	NL
7/8"	3/4"	LP	PL
7/8"	5/8"	LQ	QL
3/4"	3/4"	LR	RL
3/4"	5/8"	LS	SL
3/4"	1/2"	LT	TL
OD Tube Porting (motor)			
1"	1"	RN-Double	
3/4"	3/4"	RQ-Double	
1/2"	1/2"	RS-Double	
BSPP Porting (pump)			
1-1/4"	1"	US	SU
1-1/4"	7/8"	UT	TU
1-1/4"	3/4"	UV	VU
1"	1"	UW	WU
1"	7/8"	UX	XU
1"	3/4"	UY	YU
7/8"	7/8"	LU	UL
7/8"	3/4"	LV	VL
3/4	3/4	LX	XL
3/4	1/2"	LZ	ZL
BSPP Porting (motor)			
1"	1"	RT-Double	
3/4"	3/4"	RV-Double	
1/2"	1/2"	RW-Double	
National Pipe Thread (motor)			
1"	1"	RX-Double	
3/4"	3/4"	RY-Double	
1/2"	1/2"	RZ-Double	

Parker Hannifin Corporation
Gear Pump Division
Youngstown, Ohio USA

Gear Width (7)

	Gear Width	in.³/rev.	cm³/rev.	Max Pressure
03	3/8"	.47	7.6	3500psi (241 bar)
05	1/2"	.62	10.2	3500psi (241 bar)
06	5/8"	.78	12.7	3500psi (241 bar)
07	3/4"	.93	15.2	3500psi (241 bar)
08	7/8"	1.09	17.8	3500psi (241 bar)
10	1"	1.24	20.3	3500psi (241 bar)
11	1-1/8"	1.40	22.9	3500psi (241 bar)
12	1-1/4"	1.55	25.4	3500psi (241 bar)
13	1-3/8"	1.71	27.9	3500psi (241 bar)
15	1-1/2"	1.86	30.5	3300psi (228 bar)
16	1-5/8"	2.02	33.0	3100psi (214 bar)
17	1-3/4"	2.17	35.6	2900psi (200 bar)
18	1-7/8"	2.33	38.1	2700psi (186 bar)
20	2"	2.48	40.6	2500psi (172 bar)

Shaft Type (8)

(For Single or Tandem Units -unless noted)

97 SAE "A"Keyed
96 SAE "A" Splined
66 SAE "B" Keyed
65 SAE "B" Splined
60 Tapered, M12 x 1.5 thd. 3x5 mm Keyed; 1:5 taper (90 SEC Only)
56 Clutch Pump Tapered, 5/16 - 24 thd. (internal), #6 Woodruff Keyed (single unit only); 1:4 taper

Bearing Carriers (9)

(Dual Outlet - Pump Only)

Outlets: for clockwise porting the top port number comes first; for counter-clockwise porting the bottom port number comes first.

IN	OUT		CW	CCW
•	•		•	•
SAE Split Flange				
1-1/4"	3/4"	3/4"	**CA**	**AC**
1-1/4"	3/4"	1/2"	**DA**	**AD**
1-1/4"	1/2"	1/2"	**EA**	**AE**
1"	3/4"	3/4"	**FA**	**AF**
1"	3/4"	1/2"	**GA**	**AG**
1"	1/2"	1/2"	**HA**	**AH**
OD Tube Porting				
1-1/2"	1"	1"	**JG**	**GJ**
1-1/2"	1"	7/8"	**KG**	**GK**
1-1/2"	7/8"	7/8"	**LG**	**GL**
1-1/2"	1"	3/4"	**MG**	**GM**
1-1/2"	3/4"	3/4"	**NG**	**GN**
1-1/4"	1"	1"	**PG**	**GP**
1-1/4"	1"	7/8"	**QG**	**GQ**
1-1/4"	7/8"	7/8"	**RG**	**GR**
1-1/4"	1"	3/4"	**SG**	**GS**
1-1/4"	3/4"	3/4"	**TG**	**GT**
1-1/4"	3/4"	5/8"	**UG**	**GU**
1-1/4"	3/4"	1/2"	**VG**	**GV**
1-1/4"	5/8"	5/8"	**WG**	**GW**
1-1/4"	1/2"	1/2"	**XG**	**GX**
1"	1"	1"	**YG**	**GY**
1"	1"	7/8"	**ZG**	**GZ**
1"	7/8"	7/8"	**RC**	**CR**
1"	1"	3/4"	**SC**	**CS**
1"	3/4"	3/4"	**TC**	**CT**
1"	3/4"	5/8"	**VC**	**CV**
1"	3/4"	1/2"	**WC**	**CW**
1"	5/8"	5/8"	**XC**	**CX**
1"	1/2"	1/2"	**YC**	**CY**

(Dual Outlet - Pump Only)

Outlets: for clockwise porting the top port number comes first; for counter-clockwise porting the bottom port number comes first.

IN	OUT		CW	CCW
•	•		•	•
Metric Split Flange				
1-1/4"	3/4"	3/4"	**BD**	**DB**
1-1/4"	3/4"	1/2"	**CD**	**DC**
1-1/4"	1/2"	1/2"	**ED**	**DE**
1"	3/4"	3/4"	**FD**	**DF**
1"	3/4"	1/2"	**GD**	**DG**
1"	1/2"	1/2"	**HD**	**DH**
BSPP Porting				
1-1/2"	1"	1"	**HJ**	**JH**
1-1/2"	1"	7/8"	**KJ**	**JK**
1-1/2"	7/8"	7/8"	**LJ**	**JL**
1-1/2"	1"	3/4"	**MJ**	**JM**
1-1/2"	3/4"	3/4"	**NJ**	**JN**
1-1/4"	1"	1"	**PJ**	**JP**
1 1/4"	1"	7/8"	**QJ**	**JQ**
1-1/4"	7/8"	7/8"	**RJ**	**JR**
1-1/4"	1"	3/4"	**SJ**	**JS**
1-1/4"	3/4"	3/4"	**TJ**	**JT**
1-1/4"	3/4"	1/2"	**UJ**	**JU**
1-1/4"	1/2"	1/2"	**VJ**	**JV**
1"	1"	1"	**WJ**	**JW**
1"	1"	7/8"	**XJ**	**JX**
1"	7/8"	7/8"	**YJ**	**JY**
1"	1"	3/4"	**ZJ**	**JZ**
1"	3/4"	3/4"	**JD**	**DJ**
1"	3/4"	1/2"	**KD**	**DK**
1"	1/2"	1/2"	**LD**	**DL**

(Single Outlet - Pump Only)

Outlet for front section.

IN	OUT	CW	CCW
•	•	•	•
SAE Split Flange			
1-1/4"	1-1/4"	**CJ**	**JC**
1-1/4"	1"	**CL**	**LC**
1-1/4"	3/4"	**CM**	**MC**
1-1/4"	1/2"	**HB**	**BH**
1"	1"	**HC**	**CH**
1"	3/4"	**HF**	**FH**
1"	1/2"	**HL**	**LH**
3/4"	3/4"	**HM**	**MH**
3/4"	1/2"	**HN**	**NH**
OD Tube Porting			
1-1/2"	1-1/2"	**KB**	**BK**
1-1/2"	1-1/4"	**KC**	**CK**
1-1/2"	1"	**KF**	**FK**
1-1/2"	7/8"	**KL**	**LK**
1-1/2"	3/4"	**KM**	**MK**
1-1/4"	1-1/4"	**KN**	**NK**
1-1/4"	1"	**KO**	**OK**
1-1/4"	7/8"	**KP**	**PK**
1-1/4"	3/4"	**KQ**	**QK**
1-1/4"	5/8"	**MB**	**BM**
1-1/4"	1/2"	**ML**	**LM**
1"	1"	**MN**	**NM**
1"	7/8"	**MQ**	**QM**
1"	3/4"	**MR**	**RM**
1"	5/8"	**MS**	**SM**
1"	1/2"	**MT**	**TM**
3/4"	3/4"	**MU**	**UM**
3/4"	5/8"	**MV**	**VM**
3/4"	1/2"	**MW**	**WM**

(Single Outlet - Pump Only)

Outlet for front section.

IN	OUT	CW	CCW
•	•	•	•
Metric Split Flange			
1-1/4"	1-1/4"	**CN**	**NC**
1-1/4"	1"	**CP**	**PC**
1-1/4"	3/4"	**CQ**	**QC**
1-1/4"	1/2"	**HR**	**RH**
1"	1"	**HS**	**SH**
1"	3/4"	**HT**	**TH**
1"	1/2"	**HU**	**UH**
3/4"	3/4"	**HV**	**VH**
3/4"	1/2"	**HW**	**WH**
BSPP Porting			
1-1/2"	1-1/2"	**KR**	**RK**
1-1/2"	1-1/4"	**KS**	**SK**
1-1/2"	1"	**KT**	**TK**
1 1/2"	7/8"	**KU**	**UK**
1-1/2"	3/4"	**KV**	**VK**
1-1/4"	1-1/4"	**KW**	**WK**
1-1/4"	1"	**KX**	**XK**
1-1/4"	7/8"	**KY**	**YK**
1-1/4"	3/4"	**KZ**	**ZK**
1-1/4"	1/2"	**HO**	**OH**
1"	1"	**HP**	**PH**
1"	7/8"	**HQ**	**QH**
1"	3/4"	**HX**	**XH**
1"	1/2"	**HY**	**YH**
3/4"	3/4"	**HZ**	**ZH**
3/4"	1/2"	**MX**	**XM**
Common Inlet Passage			
No Ports		**C**	**D**

Connecting Shaft (10)

For connecting tandem units.
1 Connecting Shaft

PGP/PGM330 Series Coding

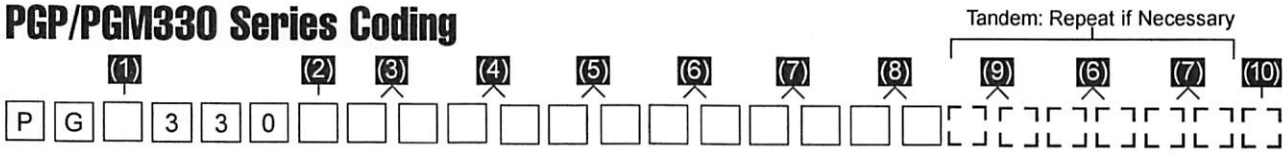

Pump/Motor (1)

P	Pump
M	Motor

Unit (2)

A	Single Unit
B	Tandem Unit (flush studs)
C	Single or Tandem with two-piece shaft (O.B. bearing required)
L	Unit with Extended Studs

Shaft End Cover (3)

1	Pump, cw w/o O.B. bearing
2	Pump, ccw w/o O.B. bearing
4	Pump, cw with O.B. bearing
5	Pump, ccw with O.B. bearing
8	Motor, bi-rot w/ O.B. bearing + 1/4" ODT drain
9	Motor, bi-rot w/o O.B. bearing + 1/4" ODT drain
18	Motor, bi-rot w/ O.B. bearing + 1/4" BSPP drain (78 only)
19	Motor, bi-rot w/o O.B. bearing + 1/4" BSPP drain (42 & 78 only)

Shaft End Cover (4)

42	SAE "B" 4 bolt
78	SAE "C" 4 bolt
97	SAE "B" 2 bolt

Port End Cover (5)

(Side Ported)

IN	OUT	CW	CCW
•	•	•	•
SAE Split Flange (pump)			
1-1/2"	1-1/4"	**EJ**	**JE**
1-1/2"	1"	**EK**	**KE**
1-1/4"	1-1/4"	**EL**	**LE**
1-1/4"	1"	**EM**	**ME**
1"	1"	**EN**	**NE**
1-1/2"	-	**OF**	**FO**
1-1/4"	-	**OG**	**GO**
1"	-	**OJ**	**JO**
-	1-1/4"	**OM**	**MO**
-	1"	**ON**	**NO**
SAE Split Flange (motor)			
1-1/4"	1-1/4"	**CS**-Double	
1"	1"	**CT**-Double	
3/4"	3/4"	**CV**-Double	
OD Tube Porting (pump)			
1-1/4"	1"	**FJ**	**JF**
1"	1"	**FL**	**LF**
1-1/4"	-	**BG**	**GB**
1"	-	**BJ**	**JB**
-	1"	**BN**	**NB**
OD Tube Porting (motor)			
1 1/4"	1 1/4"	**VC**-Double	
1"	1"	**VN**-Double	
3/4"	3/4"	**VR**-Double	
Metric Split Flange (pump)			
1-1/2"	1-1/4"	**EV**	**VE**
1-1/2"	1"	**EW**	**WE**
1-1/4"	1-1/4"	**EX**	**XE**
1 1/4"	1"	**EY**	**YE**
1"	1"	**EZ**	**ZE**
1-1/2"	-	**OR**	**RO**
1 -1/4"	-	**OS**	**SO**
1"	-	**OT**	**TO**
-	1-1/4"	**OW**	**WO**
-	1"	**OX**	**XO**

(Side Ported)

IN	OUT	CW	CCW
•	•	•	•
Unported (pump)			
BI Unported			
Unported (motor)			
BA Unported			
Metric Split Flange (motor)			
1-1/4"	1-1/4"	**CX**-Double	
1"	1"	**CY**-Double	
3/4"	3/4"	**CZ**-Double	
Metric Straight Thread (motor)			
1-1/4"	1-1/4"	**VS**-Double	
1"	1"	**VT**-Double	
3/4"	3/4"	**VW**-Double	
BSPP Porting (pump)			
1-1/4"	1"	**FS**	**SF**
1"	1"	**FT**	**TF**
1-1/4"	-	**BQ**	**QB**
1"	-	**BR**	**RB**
-	1"	**BU**	**UB**
BSPP Porting (motor)			
1-1/4"	1-1/4"	**VX**-Double	
1"	1"	**VY**-Double	
3/4"	3/4"	**VZ**-Double	

Gear Housing (6)

AB	Pump
EB	Motor

Parker Hannifin Corporation
Gear Pump Division
Youngstown, Ohio USA

Gear Width (7)

	Gear Width	in.³/rev.	cm³/rev.	Max Pressure
05	1/2"	.99	16.1	3500psi (241 bar)
07	3/4"	1.48	24.2	3500psi (241 bar)
10	1"	1.97	32.3	3500psi (241 bar)
12	1-1/4"	2.46	40.4	3500psi (241 bar)
15	1-1/2"	2.96	48.4	3500psi (241 bar)
17	1-3/4"	3.45	56.5	3250psi (224 bar)
20	2"	3.94	64.6	3000psi (207 bar)

Shaft Type (8)

(For Single or Tandem Units -unless noted)

7 SAE "C" Spline (two-piece only)
25 SAE "B" Spline
30 SAE "B" Keyed
98 SAE "BB" Splined
43 SAE "BB" Keyed

Bearing Carriers (9)

(Dual Outlet - Pump Only)

Outlets: for clockwise porting the top port number comes first; for counter-clockwise porting the bottom port number comes first.

IN •	OUT •		CW •	CCW •
SAE Split Flange				
2"	1-1/4"	1-1/4"	**AM**	**MA**
2"	1-1/4"	1"	**AN**	**NA**
2"	1"	1"	**AP**	**PA**
1-1/2"	1-1/4"	1-1/4"	**AT**	**TA**
1-1/2"	1-1/4"	1"	**AU**	**UA**
1-1/2"	1"	1"	**AV**	**VA**
1-1/4"	1-1/4"	1-1/4"	**AW**	**WA**
1-1/4"	1-1/4"	1"	**AX**	**XA**
*1-1/4"	1"	1"	**AY**	**YA**
1"	1"	1"	**AZ**	**ZA**
Metric Split Flange				
2"	1-1/4"	1-1/4"	**DM**	**MD**
2"	1-1/4"	1"	**DN**	**ND**
2"	1"	1"	**DP**	**PD**
1-1/2"	1-1/4"	1-1/4"	**DT**	**TD**
1-1/2"	1-1/4"	1"	**DU**	**UD**
1-1/2"	1"	1"	**DV**	**VD**
1-1/4"	1-1/4"	1-1/4"	**DW**	**WD**
1-1/4"	1-1/4"	1"	**DX**	**XD**
1"	1"	1"	**DZ**	**ZD**
OD Tube Porting				
1-1/2"	1"	1"	**GV**	**VG**
1-1/4"	1"	1"	**GY**	**YG**
1"	1"	1"	**GZ**	**ZG**

(Single Outlet - Pump Only)

Outlet for front section.

IN •	OUT •	CW •	CCW •
SAE Split Flange			
2"	1-1/2"	**HB**	**BH**
2"	1-1/4"	**HC**	**CH**
2"	1"	**HF**	**FH**
1-1/2"	1-1/2"	**HL**	**LH**
1-1/2"	1-1/4"	**HM**	**MH**
1-1/2"	1"	**HN**	**NH**
1-1/4"	1-1/4"	**HO**	**OH**
1-1/4"	1"	**HP**	**PH**
1"	1"	**HQ**	**QH**
1-1/4"	1"	**RS**	**SR**
OD Tube Porting			
1 1/2"	1 1/4" -	**KM**	**MK**
1 1/2"	1" -	**KN**	**NK**
1 1/4"	1 1/4" -	**KO**	**OK**
1 1/4"	1" -	**KP**	**PK**
1"	1" -	**KQ**	**QK**
Metric Split Flange			
2"	1-1/2"	**HR**	**RH**
2"	1-1/4"	**HS**	**SH**
2"	1"	**HT**	**TH**
1-1/2"	1-1/2"	**HU**	**UH**
1-1/2"	1-1/4"	**HV**	**VH**
1-1/2"	1"	**HW**	**WH**
1-1/4"	1-1/4"	**HX**	**XH**
1-1/4"	1"	**HY**	**YH**
1"	1"	**HZ**	**ZH**

(Combined Outlet)

Outlet for front section.

IN •	OUT •	CW •	CCW •
SAE Split Flange (pump)			
2"	1-1/2"	**UN**	**NU**
2"	1-1/4"	**UO**	**OU**
1-1/2"	1-1/2"	**UP**	**PU**
1-1/2"	1-1/4"	**UQ**	**QU**
1-1/4"	1-1/4"	**UR**	**RU**
SAE Split Flange (motor)			
1-1/2"	1-1/2"	**BB**-Double	
1-1/4"	1-1/4"	**CC**-Double	
1"	1"	**EE**-Double	
3/4"	3/4"	**FF**-Double	
OD Tube Porting (pump)			
1-1/2"	1-1/4"	**PQ**	**QP**
1-1/4"	1-1/4"	**PR**	**RP**
OD Tube Porting (motor)			
1-1/4"	1-1/4"	**NN**-Double	
1"	1"	**QQ**-Double	
3/4"	3/4"	**RR**-Double	
Common Inlet Passage (pump)			
No Ports		**C**	**D**

(Combined Outlet)

Outlet for front section.

IN •	OUT •	CW •	CCW •
Metric Split Flange (motor)			
1-1/2"	1-1/2"	**HH**-Double	
1-1/4"	1-1/4"	**JJ**-Double	
1"	1"	**KK**-Double	
3/4"	3/4"	**LL**-Double	
BSPP Porting (motor)			
1-1/4"	1-1/4"	**XX**-Double	
1"	1"	**YY**-Double	
3/4"	3/4"	**ZZ**-Double	
Metric Straight Thread (motor)			
1-1/4"	1-1/4"	**TT**-Double	
1"	1"	**UU**-Double	
3/4"	3/4"	**VV**-Double	

* Outlet port for rear section.

Connecting Shaft (10)

For connecting tandem units.
1 Connecting Shaft

Parker Hannifin Corporation
Gear Pump Division
Youngstown, Ohio USA

PGP/PGM350 Series Coding

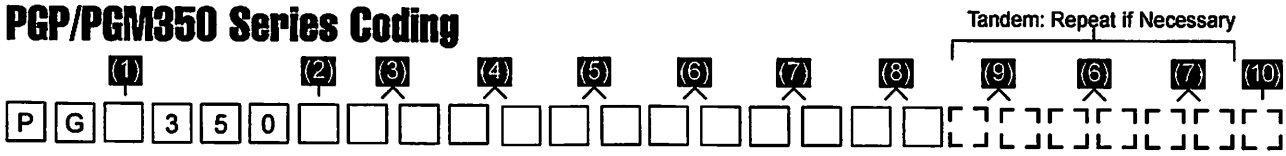

Pump/Motor (1)

P	Pump
M	Motor

Unit (2)

A	Single Unit
B	Tandem Unit (flush studs)
C	Single or Tandem with two-piece shaft (O.B. bearing required)
L	Unit with Extended Studs

Shaft End Cover (3)

1	Pump, cw w/o O.B. bearing
2	Pump, ccw w/o O.B. bearing
4	Pump, cw with O.B. bearing
5	Pump, ccw with O.B. bearing
8	Motor, bi-rot w/ O.B. bearing + 1/4" ODT drain
9	Motor, bi-rot w/o O.B. bearing + 1/4" ODT drain
18	Motor, bi-rot w/ O.B. bearing + 1/4" BSPP drain (78 only)
19	Motor, bi-rot w/o O.B. bearing + 1/4" BSPP drain (42 & 78 only)

Shaft End Cover (4)

42	SAE "B" 4 bolt
46	SAE "B" 2/4 bolt
62	"ZF" 4 bolt (462 only) - 80 mm pilot, 80x80 mm
78	SAE "C" 4 bolt
97	SAE "B" 2 bolt
98	SAE "C" 2 bolt

Port End Cover (5)

(Side Ported)

IN •	OUT •	CW •	CCW •
SAE Split Flange (pump)			
2"	1-1/2"	EC	CE
2"	1-1/4"	EF	FE
2"	1"	EG	GE
1-1/2"	1-1/2"	EH	HE
1-1/2"	1-1/4"	EJ	JE
1-1/2"	1"	EK	KE
1-1/4"	1-1/4"	EL	LE
1-1/4"	1"	EM	ME
1"	1"	EN	NE
2"	-	OE	EO
1-1/2"	-	OF	FO
1-1/4"	-	OG	GO
1"	-	OJ	JO
-	1-1/2"	OL	LO
-	1-1/4"	OM	MO
-	1"	ON	NO
SAE Split Flange (motor)			
1-1/2"	1-1/2"	CR-Double	
1-1/4"	1-1/4"	CS-Double	
1"	1"	CT-Double	
3/4"	3/4"	CV-Double	
OD Tube Porting (pump)			
1-1/2"	1-1/4"	FB	BF
1-1/2"	1"	FC	CF
1-1/4"	1-1/4"	FG	GF
1-1/4"	1"	FJ	JF
1"	1"	FL	LF
1-1/2"	-	BC	CB
1-1/4"	-	BG	GB
1"	-	BJ	JB
-	1-1/4"	BL	LB
-	1"	BN	NB
OD Tube Porting (motor)			
1-1/4"	1-1/4"	VC-Double	
1"	1"	VN-Double	
3/4"	3/4"	VR-Double	
Unported (pump)			
Unported		BI	IB
Unported (motor)			
BA Unported			

(Side Ported)

IN •	OUT •	CW •	CCW •
Metric Split Flange (pump)			
2"	1-1/2"	ER	RE
2"	1-1/4"	ES	SE
2"	1"	ET	TE
1-1/2"	1-1/2"	EU	UE
1-1/2"	1-1/4"	EV	VE
1-1/2"	1"	EW	WE
1-1/4"	1-1/4"	EX	XE
1-1/4"	1"	EY	YE
1"	1"	EZ	ZE
2"	-	OP	PO
1-1/2"	-	OR	RO
1-1/4"	-	OS	SO
1"	-	OT	TO
-	1-1/2"	OV	VO
-	1-1/4"	OW	WO
-	1"	OX	XO
Metric Split Flange (motor)			
1-1/2"	1-1/2"	CW-Double	
1-1/4"	1-1/4"	CX-Double	
1"	1"	CY-Double	
3/4"	3/4"	CZ-Double	
Metric Straight Thread (motor)			
1-1/4"	1-1/4"	VS-Double	
1"	1"	VT-Double	
3/4"	3/4"	VW-Double	
BSPP Porting (pump)			
1-1/2"	1-1/4"	FN	NF
1-1/2"	1"	FP	PF
1-1/4"	1-1/4"	FR	RF
1-1/4"	1"	FS	SF
1"	1"	FT	TF
1-1/2"	-	BP	PB
1-1/4"	-	BQ	QB
1"	-	BR	RB
-	1-1/4"	BT	TB
-	1"	BU	UB
BSPP Porting (motor)			
1-1/4"	1-1/4"	VX-Double	
1"	1"	VY-Double	
3/4"	3/4"	VZ-Double	

Gear Housing (6)

AB	Pump
EB	Motor

Gear Width (7)

	Gear Width	in.³/rev.	cm³/rev.	Max Pressure
05	1/2"	1.28	20.9	3500psi (241 bar)
07	3/4"	1.91	31.3	3500psi (241 bar)
10	1"	2.55	41.8	3500psi (241 bar)
12	1-1/4"	3.19	52.2	3500psi (241 bar)
15	1-1/2"	3.83	62.7	3500psi (241 bar)
17	1-3/4"	4.46	73.1	3250psi (224 bar)
20	2"	5.10	83.6	3000psi (207 bar)
22	2-1/4"	5.74	94.0	2750psi (190 bar)
25	2-1/2"	6.38	104.5	2500psi (172 bar)

Shaft Type (8)

(For Single, Tandem or Two-piece Shaft -unless noted)

6 88X32X36 DIN 5462 Spline (two-piece only)
7 SAE "C" Spline
11 SAE "C" Keyed
25 SAE "B" Spline
43 SAE "BB" Keyed
73 SAE "C" Keyed Long (single and two-piece only)
98 SAE "BB" Splined (tandem only)

Bearing Carriers (9)

(Dual Outlet - Pump Only)

Outlets: for clockwise porting the top port number comes first; for counter-clockwise porting the bottom port number comes first.

IN	OUT		CW	CCW
SAE Split Flange				
2-1/2"	1-1/4"	1-1/4"	**AF**	**FA**
2-1/2"	1-1/4"	1"	**AG**	**GA**
2-1/2"	1"	1"	**AH**	**HA**
2"	1-1/4"	1-1/4"	**AM**	**MA**
2"	1-1/4"	1"	**AN**	**NA**
2"	1"	1"	**AP**	**PA**
1-1/2"	1-1/4"	1-1/4"	**AT**	**TA**
1-1/2"	1-1/4"	1"	**AU**	**UA**
1-1/2"	1"	1"	**AV**	**VA**
1-1/4"	1-1/4"	1-1/4"	**AW**	**WA**
1-1/4"	1-1/4"	1"	**AX**	**XA**
1-1/4"	1"	1"	**AY**	**YA**
1"	1"	1"	**AZ**	**ZA**
Metric Split Flange				
2"	1-1/4"	1-1/4"	**DM**	**MD**
2"	1-1/4"	1"	**DN**	**ND**
2"	1"	1"	**DP**	**PD**
1-1/2"	1-1/4"	1-1/4"	**DT**	**TD**
1-1/2"	1-1/4"	1"	**DU**	**UD**
1-1/2"	1"	1"	**DV**	**VD**
1-1/4"	1-1/4"	1-1/4"	**DW**	**WD**
1-1/4"	1-1/4"	1"	**DX**	**XD**
1-1/4"	1"	1"	**DY**	**YD**
1"	1"	1"	**DZ**	**ZD**
OD Tube Porting				
2"	1-1/4"	1-1/4"	**GM**	**MG**
2"	1-1/4"	1"	**GN**	**NG**
2"	1"	1"	**GP**	**PG**
1-1/2"	1-1/4"	1-1/4"	**GT**	**TG**
1-1/2"	1-1/4"	1"	**GU**	**UG**
1-1/2"	1"	1"	**GV**	**VG**
1-1/4"	1-1/4"	1-1/4"	**GW**	**WG**
1-1/4"	1-1/4"	1"	**GX**	**XG**
1-1/4"	1"	1"	**GY**	**YG**
1"	1"	1"	**GZ**	**ZG**

(Single Outlet - Pump Only)

Outlet for front section.

IN	OUT	CW	CCW
SAE Split Flange			
2"	1-1/2"	**HB**	**BH**
2"	1-1/4"	**HC**	**CH**
2"	1"	**HF**	**FH**
1-1/2"	1-1/2"	**HL**	**LH**
1-1/2"	1-1/4"	**HM**	**MH**
1-1/2"	1"	**HN**	**NH**
1-1/4"	1-1/4"	**HO**	**OH**
1-1/4"	1"	**HP**	**PH**
* 1"	1"	**HQ**	**QH**
1-1/4"	1"	**RS**	**SR**
OD Tube Porting			
2"	1-1/2"	**KB**	**BK**
2"	1-1/4"	**KC**	**CK**
2"	1"	**KF**	**FK**
1-1/2"	1-1/2"	**KL**	**LK**
1-1/2"	1-1/4"	**KM**	**MK**
1-1/2"	1"	**KN**	**NK**
1-1/4"	1-1/4"	**KO**	**OK**
1-1/4"	1"	**KP**	**PK**
1"	1"	**KQ**	**QK**
BSPP Porting			
2"	1-1/2"	**KR**	**RK**
2"	1-1/4"	**KS**	**SK**
2"	1"	**KT**	**TK**
1-1/2"	1-1/2"	**KU**	**UK**
1-1/2"	1-1/4"	**KV**	**VK**
1-1/2"	1"	**KW**	**WK**
1-1/4"	1-1/4"	**KX**	**XK**
1-1/4"	1"	**KY**	**YK**
1"	1"	**KZ**	**ZK**

(Combined Outlet)

Outlet for front section.

IN	OUT	CW	CCW
SAE Split Flange (pump)			
2"	1-1/2"	**UN**	**NU**
2"	1-1/4"	**UO**	**OU**
1-1/2"	1-1/2"	**UP**	**PU**
1-1/2"	1-1/4"	**UQ**	**QU**
1-1/4"	1-1/4"	**UR**	**RU**
SAE Split Flange (motor)			
2"	2"	**AA**-Double	
1-1/2"	1-1/2"	**BB**-Double	
1-1/4"	1-1/4"	**CC**-Double	
1"	1"	**EE**-Double	
3/4"	3/4"	**FF**-Double	
OD Tube Porting (pump)			
2"	1-1/2"	**PE**	**EP**
2"	1-1/4"	**PM**	**MP**
1-1/2"	1-1/2"	**PN**	**NP**
1-1/2"	1-1/4"	**PQ**	**QP**
1-1/4"	1-1/4"	**PR**	**RP**
OD Tube Porting (motor)			
1-1/2"	1-1/2"	**MM**-Double	
1-1/4"	1-1/4"	**NN**-Double	
1"	1"	**QQ**-Double	
3/4"	3/4"	**RR**-Double	
Common Inlet Passage			
No Ports		**C**	**D**
Metric Split Flange (motor)			
2"	2"	**GG**-Double	
1-1/2"	1-1/2"	**HH**-Double	
1-1/4"	1-1/4"	**JJ**-Double	
1"	1"	**KK**-Double	
3/4"	3/4"	**LL**-Double	

(Combined Outlet)

Outlet for front section.

IN	OUT	CW	CCW
BSPP Porting (motor)			
1-1/2"	1-1/2"	**WW**-Double	
1-1/4"	1-1/4"	**XX**-Double	
1"	1"	**YY**-Double	
3/4"	3/4"	**ZZ**-Double	
Metric Straight Thread (motor)			
1-1/2"	1-1/2"	**SS**-Double	
1-1/4"	1-1/4"	**TT**-Double	
1"	1"	**UU**-Double	
3/4"	3/4"	**VV**-Double	

* Outlet port for rear section.

Connecting Shaft (10)

For connecting tandem units.
1 Connecting Shaft

Parker Hannifin Corporation
Gear Pump Division
Youngstown, Ohio USA

PGP/PGM365 Series Coding

Tandem: Repeat if Necessary

(1)		(2)	(3)	(4)	(5)	(6)	(7)	(8)	(9)	(6)	(7)	(10)
P	G		3	6	5							

Pump/Motor (1)

P	Pump
M	Motor

Unit (2)

A	Single Unit
B	Tandem Unit (flush studs)
C	Single or Tandem with two-piece shaft (O.B. bearing required)
L	Unit with Extended Studs

Shaft End Cover (3)

1	Pump, cw w/o O.B. bearing
2	Pump, ccw w/o O.B. bearing
4	Pump, cw with O.B. bearing
5	Pump, ccw with O.B. bearing
8	Motor, bi-rot w/ O.B. bearing + 1/4" ODT drain
9	Motor, bi-rot w/o O.B. bearing + 1/4" ODT drain

Shaft End Cover (4)

42	SAE "B" 4 bolt
78	SAE "C" 4 bolt
97	SAE "B" 2 bolt
98	SAE "C" 2 bolt

Port End Cover (5)

(Side Ported)

IN	OUT	CW	CCW
•	•	•	•
SAE Split Flange (pump)			
2"	1-1/2"	EC	CE
2"	1-1/4"	EF	FE
2"	1"	EG	GE
1-1/2"	1-1/2"	EH	HE
1-1/2"	1-1/4"	EJ	JE
1-1/2"	1"	EK	KE
1-1/4"	1-1/4"	EL	LE
1-1/4"	1"	EM	ME
1"	1"	EN	NE
2"	-	OE	EO
1-1/2"	-	OF	FO
1-1/4"	-	OG	GO
1"	-	OJ	JO
-	1-1/2"	OL	LO
-	1-1/4"	OM	MO
-	1"	ON	NO
SAE Split Flange (motor)			
1-1/2"	1-1/2"	CR-Double	
1-1/4"	1-1/4"	CS-Double	
1"	1"	CT-Double	
3/4"	3/4"	CV-Double	
OD Tube Porting (pump)			
1-1/2"	1-1/4"	FB	BF
1-1/2"	1"	FC	CF
1-1/4"	1-1/4"	FG	GF
1-1/4"	1"	FJ	JF
1"	1"	FL	LF
1-1/2"	-	BC	CB
1-1/4"	-	BG	GB
1"	-	BJ	JB
-	1-1/4"	BL	LB
-	1"	BN	NB

(Side Ported)

IN	OUT	CW	CCW
•	•	•	•
OD Tube Porting (motor)			
1-1/4"	1-1/4"	VC-Double	
1"	1"	VN-Double	
3/4"	3/4"	VR-Double	
Unported (pump)			
Unported		BI	IB
Unported (motor)			
BA	Unported		
Metric Split Flange (pump)			
2"	1-1/2"	ER	RE
2"	1-1/4"	ES	SE
2"	1"	ET	TE
1-1/2"	1-1/2"	EU	UE
1-1/2"	1-1/4"	EV	VE
1-1/2"	1"	EW	WE
1-1/4"	1-1/4"	EX	XE
1-1/4"	1"	EY	YE
1"	1"	EZ	ZE
2"	-	OP	PO
1-1/2"	-	OR	RO
1-1/4"	-	OS	SO
1"	-	OT	TO
-	1-1/2"	OV	VO
-	1-1/4"	OW	WO
-	1"	OX	XO
Metric Split Flange (motor)			
1-1/2"	1-1/2"	CW-Double	
1-1/4"	1-1/4"	CX-Double	
1"	1"	CY-Double	
3/4"	3/4"	CZ-Double	

(Side Ported)

IN	OUT	CW	CCW
•	•	•	•
Metric Straight Thread (motor)			
1-1/4"	1-1/4"	VS-Double	
1"	1"	VT-Double	
3/4"	3/4"	VW-Double	
BSPP Porting (pump)			
1-1/2"	1-1/4"	FN	NF
1-1/2"	1"	FP	PF
1-1/4"	1-1/4"	FR	RF
1-1/4"	1"	FS	SF
1"	1"	FT	TF
1-1/2"	-	BP	PB
1-1/4"	-	BQ	QB
1"	-	BR	RB
-	1-1/4"	BT	TB
-	1"	BU	UB
BSPP Porting (motor)			
1-1/4"	1-1/4"	VX-Double	
1"	1"	VY-Double	
3/4"	3/4"	VZ-Double	

Gear Housing (6)

AB	Pump
EB	Motor

Gear Width (7)

	Gear Width	in.³/rev.	cm³/rev.	Max Pressure
07	3/4"	2.70	44.3	3500psi (241 bar)
10	1"	3.60	59.0	3500psi (241 bar)
12	1-1/4"	4.50	73.8	3500psi (241 bar)
15	1-1/2"	5.40	88.5	3500psi (241 bar)
17	1-3/4"	6.30	103.3	3500psi (241 bar)
20	2"	7.20	118.0	3500psi (241 bar)
22	2-1/4"	8.10	132.8	3250psi (224 bar)
25	2-1/2"	9.00	147.5	3000psi (207 bar)

Shaft Type (8)

(For Single, Tandem or Two-piece Units -unless noted)

7	SAE "C" Spline (single and tandem only)
11	SAE "C" Keyed
25	SAE "B" Spline (single only)

Parker Hannifin Corporation
Gear Pump Division
Youngstown, Ohio USA

Bearing Carriers (9)

(Dual Outlet - Pump Only)

Outlets: for clockwise porting the top port number comes first; for counter-clockwise porting the bottom port number comes first.

IN	OUT		CW	CCW
•	•		•	•
SAE Split Flange				
2-1/2"	1-1/2"	1-1/2"	**AC**	**CA**
2-1/2"	1-1/2"	1-1/4"	**AD**	**DA**
2-1/2"	1-1/2"	1"	**AE**	**EA**
2-1/2"	1-1/4"	1-1/4"	**AF**	**FA**
2-1/2"	1-1/4"	1"	**AG**	**GA**
2-1/2"	1"	1"	**AH**	**HA**
2"	1-1/2"	1-1/2"	**AJ**	**JA**
2"	1-1/2"	1-1/4"	**AK**	**KA**
2"	1-1/2"	1"	**AL**	**LA**
2"	1-1/4"	1-1/4"	**AM**	**MA**
2"	1-1/4"	1"	**AN**	**NA**
2"	1"	1"	**AP**	**PA**
1-1/2"	1-1/2"	1-1/2"	**AQ**	**QA**
1-1/2"	1-1/2"	1-1/4"	**AR**	**RA**
1-1/2"	1-1/2"	1"	**AS**	**SA**
1-1/2"	1-1/4"	1-1/4"	**AT**	**TA**
1-1/2"	1-1/4"	1"	**AU**	**UA**
1-1/2"	1"	1"	**AV**	**VA**
1-1/4"	1-1/4"	1-1/4"	**AW**	**WA**
1-1/4"	1-1/4"	1"	**AX**	**XA**
1-1/4"	1"	1"	**AY**	**YA**
1"	1"	1"	**AZ**	**ZA**
OD Tube Porting				
2"	1-1/2"	1 1/2"	**GJ**	**JG**
2"	1-1/2"	1 1/4"	**GK**	**KG**
2"	1-1/2"	1"	**GL**	**LG**
2"	1-1/4"	1 1/4"	**GM**	**MG**
2"	1-1/4"	1"	**GN**	**NG**
2"	1"	1"	**GP**	**PG**
1-1/2"	1-1/2"	1 1/2"	**GQ**	**QG**
1-1/2"	1-1/2"	1 1/4"	**GR**	**RG**
1-1/2"	1-1/2"	1"	**GS**	**SG**
1-1/2"	1-1/4"	1 1/4"	**GT**	**TG**
1-1/2"	1-1/4"	1"	**GU**	**UG**
1-1/2"	1"	1"	**GV**	**VG**
1-1/4"	1-1/4"	1 1/4"	**GW**	**WG**
1-1/4"	1-1/4"	1"	**GX**	**XG**
1-1/4"	1"	1"	**GY**	**YG**
1"	1"	1"	**GZ**	**ZG**

(Dual Outlet - Pump Only)

Outlets: for clockwise porting the top port number comes first; for counter-clockwise porting the bottom port number comes first.

IN	OUT		CW	CCW
•	•		•	•
Metric Split Flange				
2-1/2"	1-1/2"	1-1/2"	**DB**	**BD**
2-1/2"	1-1/2"	1-1/4"	**DC**	**CD**
2-1/2"	1-1/2"	1"	**DE**	**ED**
2-1/2"	1-1/4"	1-1/4"	**DF**	**FD**
2-1/2"	1-1/4"	1"	**DG**	**GD**
2-1/2"	1"	1"	**DH**	**HD**
2"	1-1/2"	1-1/2"	**DJ**	**JD**
2"	1-1/2"	1-1/4"	**DK**	**KD**
2"	1-1/2"	1"	**DL**	**LD**
2"	1-1/4"	1-1/4"	**DM**	**MD**
2"	1-1/4"	1"	**DN**	**ND**
2"	1"	1"	**DP**	**PD**
1-1/2"	1-1/2"	1-1/2"	**DQ**	**QD**
1-1/2"	1-1/2"	1-1/4"	**DR**	**RD**
1-1/2"	1-1/2"	1"	**DS**	**SD**
1-1/2"	1-1/4"	1-1/4"	**DT**	**TD**
1-1/2"	1-1/4"	1"	**DU**	**UD**
1-1/2"	1"	1"	**DV**	**VD**
1-1/4"	1-1/4"	1-1/4"	**DW**	**WD**
1-1/4"	1-1/4"	1"	**DX**	**XD**
1-1/4"	1"	1"	**DY**	**YD**
1"	1"	1"	**DZ**	**ZD**
BSPP Porting				
2"	1-1/2"	1-1/2"	**JH**	**HJ**
2"	1-1/2"	1-1/4"	**JK**	**KJ**
2"	1-1/2"	1"	**JL**	**LJ**
2"	1-1/4"	1-1/4"	**JM**	**MJ**
2"	1-1/4"	1"	**JN**	**NJ**
2"	1"	1"	**JP**	**PJ**
1 1/2"	1-1/2"	1-1/2"	**JQ**	**QJ**
1 1/2"	1-1/2"	1-1/4"	**JR**	**RJ**
1 1/2"	1-1/2"	1"	**JS**	**SJ**
1 1/2"	1-1/4"	1-1/4"	**JT**	**TJ**
1 1/2"	1-1/4"	1"	**JU**	**UJ**
1 1/2"	1"	1"	**JV**	**VJ**
1 1/4"	1-1/4"	1-1/4"	**JW**	**WJ**
1 1/4"	1-1/4"	1"	**JX**	**XJ**
1 1/4"	1"	1"	**JY**	**YJ**
1"	1"	1"	**JZ**	**ZJ**

(Single Outlet - Pump Only)

Outlet for front section.

IN	OUT	CW	CCW
•	•	•	•
Metric Split Flange			
2-1/2"	1-1/2"	**CN**	**NC**
2-1/2"	1-1/4"	**CP**	**PC**
2-1/2"	1"	**CQ**	**QC**
2"	1-1/2"	**HR**	**RH**
2"	1-1/4"	**HS**	**SH**
2"	1"	**HT**	**TH**
1-1/2"	1-1/2"	**HU**	**UH**
1-1/2"	1-1/4"	**HV**	**VH**
1-1/2"	1"	**HW**	**WH**
1-1/4"	- 1/4"	**HX**	**XH**
1-1/4"	1"	**HY**	**YH**
1"	1"	**HZ**	**ZH**
SAE Split Flange			
2-1/2"	1-1/2"	**CJ**	**JC**
2-1/2"	1-1/4"	**CL**	**LC**
2-1/2"	1"	**CM**	**MC**
2"	1-1/2"	**HB**	**BH**
2"	1-1/4"	**HC**	**CH**
SAE Split Flange (continued)			
2"	1"	**HF**	**FH**
1-1/2"	1-1/2"	**HL**	**LH**
1-1/2"	1-1/4"	**HM**	**MH**
1-1/2"	1"	**HN**	**NH**
1-1/4"	1-1/4"	**HO**	**OH**
1-1/4"	1"	**HP**	**PH**
1"	1"	**HQ**	**QH**
2-1/2"	1-1/2"	**NR**	**RN**
1-1/4"	1"	**RS**	**SR**
OD Tube Porting			
2"	1-1/2"	**KB**	**BK**
2"	1-1/4"	**KC**	**CK**
2"	1"	**KF**	**FK**
1-1/2"	1-1/2"	**KL**	**LK**
1-1/2"	1-1/4"	**KM**	**MK**
1-1/2"	1"	**KN**	**NK**
1-1/4"	1-1/4"	**KO**	**OK**
1-1/4"	1"	**KP**	**PK**
1"	1"	**KQ**	**QK**

(Combined Outlet)

Outlet for front section.

IN	OUT	CW	CCW
•	•	•	•
SAE Split Flange (pump)			
2-1/2"	1-1/2"	**UC**	**CU**
2-1/2"	1-1/4"	**UF**	**FU**
2"	1-1/2"	**UN**	**NU**
2"	1-1/4"	**UO**	**OU**
1-1/2"	1-1/2"	**UP**	**PU**
1-1/2"	1-1/4"	**UQ**	**QU**
1-1/4"	1-1/4"	**UR**	**RU**
SAE Split Flange (motor)			
2"	2"	**AA**-Double	
1-1/2"	1-1/2"	**BB**-Double	
1-1/4"	1-1/4"	**CC**-Double	
1"	1"	**EE**-Double	
3/4"	3/4"	**FF**-Double	
OD Tube Porting (pump)			
2"	1-1/2"	**PE**	**EP**
2"	1-1/4"	**PM**	**MP**
1-1/2"	1-1/2"	**PN**	**NP**
1-1/2"	1-1/4"	**PQ**	**QP**
1-1/4"	1-1/4"	**PR**	**RP**
OD Tube Porting (motor)			
1-1/2"	1-1/2"	**MM**-Double	
1-1/4"	1-1/4"	**NN**-Double	
1"	1"	**QQ**-Double	
3/4"	3/4"	**RR**-Double	
Metric Split Flange (motor)			
2"	2"	**GG**-Double	
1-1/2"	1-1/2"	**HH**-Double	
1-1/4"	1-1/4"	**JJ**-Double	
1"	1"	**KK**-Double	
3/4"	3/4"	**LL**-Double	
BSPP Porting (motor)			
1-1/2"	1-1/2"	**WW**-Double	
1-1/4"	1-1/4"	**XX**-Double	
1"	1"	**YY**-Double	
3/4"	3/4"	**ZZ**-Double	
Metric Straight Thread (motor)			
1-1/2"	1-1/2"	**SS**-Double	
1-1/4"	1-1/4"	**TT**-Double	
1"	1"	**UU**-Double	
3/4"	3/4"	**VV**-Double	
Common Inlet Passage			
No Ports		**C**	**D**

* Outlet port for rear section.

Connecting Shaft (10)

For connecting tandem units.
1 Connecting Shaft

Parker Hannifin Corporation
Gear Pump Division
Youngstown, Ohio USA

General Information

PGP/PGM300 Series
Pumps & Motors

- Three-piece cast iron construction
- Low friction bushing design
- Heavy-duty application
- Single, multiple, piggyback and thru-drive assemblies

The PGP/PGM300 Series pumps and motors set the standard for superior performance and reliability in heavy-duty hydraulic application. The three-piece cast iron construction with large area, low-friction bushings provide strength, high efficiency, and long life in severe operating environments. The design includes an advanced thrust plate and seal configuration, which optimizes performance even in high temperature and low viscosity conditions.

The PGP300 Series pumps are available in single, multiple, piggyback, and thru-drive assemblies. Multiple pumps reduce mounting costs, allow for a small package size and common inlet capabilities. Assemblies up to six pumping sections are available. Piggyback pumps allow the combination of pump sections of different frame size to use a common inlet in tandem configuration. The thru-drive feature allows an independent piston or gear pump to be mounted to a rear SAE drive pad. Multiple section motors are also available providing enhanced torque and speed control as well as smooth torque ripple.

Relief valve, priority valve, load-sense unloading, and other integrated or bolt-on valve options are also available.

Model P = Pump M = Motor		Theoretical Displacement		Mineral Oil Maximum Pressure			
Options D = Stealth	Gear Width	in^3/r - cm^3/r		Continuous psi - bar		Intermittent psi - bar	
PGP315		.620	10.2	3500	245	4000	275
PGM315		.775	12.7	3500	245	4000	275
		.930	15.2	3500	245	4000	275
		1.09	17.8	3500	245	4000	275
		1.24	20.3	3500	245	4000	275
		1.40	22.9	3500	245	4000	275
		1.55	25.9	3500	245	3850	265
		1.71	27.9	3500	245	3700	255
		1.86	30.5	3300	225	3500	245
		2.02	33.0	3100	215	3350	230
		2.17	35.6	2900	200	3100	215
		2.33	38.1	2700	190	2950	205
		2.48	40.6	2500	175	2750	190
PGP330	0.5	.985	16.1	3500	245	4000	275
PGM330	0.75	1.474	24.2	3500	245	4000	275
	1.0	1.97	32.3	3500	245	4000	275
	1.25	2.46	40.3	3500	245	4000	275
	1.5	2.95	48.4	3500	245	3850	265
	1.75	3.44	56.5	3250	225	3500	245
	2.0	3.94	64.6	3000	210	3300	225
PGP350		1.28	20.9	3500	245	4000	275
PGM350		1.91	31.3	3500	245	4000	275
		2.55	41.8	3500	245	4000	275
		3.19	52.2	3500	245	4000	275
		3.82	62.7	3500	245	3850	265
		4.46	73.1	3250	225	3500	245
		5.10	83.6	3000	210	3300	225
		5.73	94.0	2750	190	3000	210
	2.5	6.38	104.5	2500	175	2750	190
PGP365	0.75	2.70	44.3	3500	245	4000	275
PGM365	1.0	3.60	59.0	3500	245	4000	275
	1.25	4.50	73.8	3500	245	4000	275
	1.5	5.40	88.5	3500	245	4000	275
	1.75	6.30	103.3	3500	245	4000	275
	2.0	7.20	118.0	3500	245	3850	265
	2.25	8.10	132.8	3250	225	3500	245
	2.5	9.00	147.5	3000	210	3300	225

PL Factor

Each section of a multiple pump or motor should be regarded as a single unit with corresponding delivery and power input requirements. Since the entire input horsepower is fed through a common drive shaft, the power delivered to or from the unit is limited by the physical strength of the shaft. This limit is defined as a "PL" factor; "P" being the operating pressure and "L" the summation of gear widths.

In multiple units the "PL" must be calculated for the first connecting shaft as well as the drive shaft. Each style or type of shaft has a unique "PL" factor as noted in the table to the right.

Pressure X Total Gear Width = PL

PL MUST NOT EXCEED NUMBER SHOWN IN CHART FOR APPROPRIATE SHAFT.

PL Chart

Shaft Style	Integral Shaft & Gear	Two-Piece Style
PGP/PGM315		
SAE "A" Spline *(up to 1.25" GW)*	4,450	--
SAE "A" Key	3,600	--
SAE "B" Spline	13,400	--
SAE "B" Key	9,900	--
Connecting Shaft	--	5,550
PGP/PGM330		
SAE "B" Spline	8,450	6,250
SAE "B" Key	6,250	6,250
SAE "B-B" Spline	13,000	6,250
SAE "B-B" Key	9,300	6,250
SAE "C" Spline	--	6,250
SAE "C" Key	--	6,250
Connecting Shaft	--	6,250
PGP/PGM350		
SAE "B" Spline	6,450	6,450
SAE "B" Key	4,750	4,750
SAE "B-B" Spline	9,900	9,000
SAE "B-B" Key	7,100	7,100
SAE "C" Spline	19,100	9,000
SAE "C" Key	13,900	9,000
Connecting Shaft	--	9,000
PGP/PGM365		
SAE "B" Spline	5,050	5,050
SAE "B" Key	3,700	3,700
SAE "B-B" Spline	7,750	5,350
SAE "B-B" Key	5,550	5,550
SAE "C" Spline	14,900	11,950
SAE "C" Key	10,800	10,800
Connecting Shaft	--	11,950

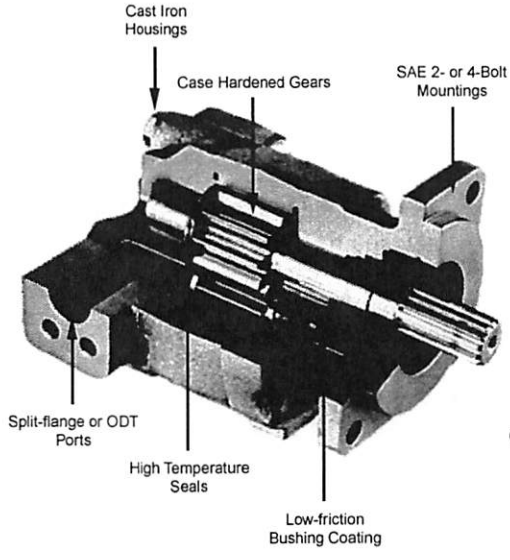

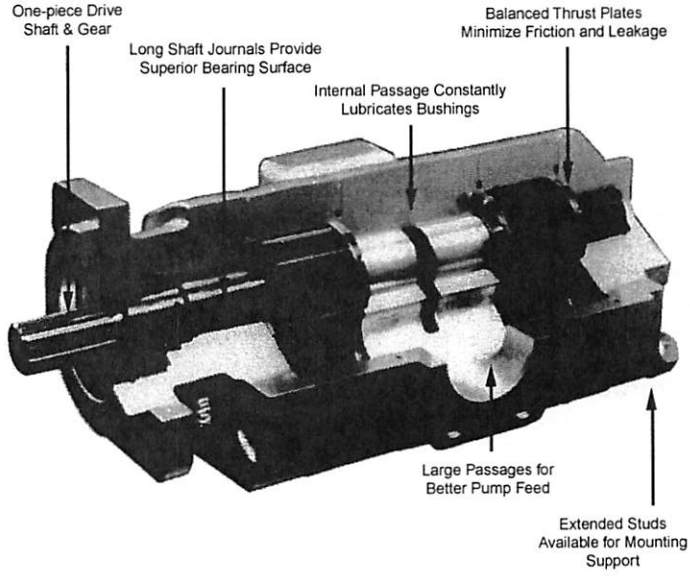

General Data

Pump Type
Heavy duty, cast iron, external gear pump

Mounting
SAE standard flanges, ZF, others

Porting
SAE split flanges and other types of threaded ports (see table page 7)

Shaft Style
SAE splined, keyed, and others (see table page 7)

Drive
Clockwise, counterclockwise, double. Direct drive with flexible coupling is recommended. Pumps subject to radial loads must be specified with an outboard bearing. Axial loading is not allowed.

Speed
From 400 to 3000 rpm.

Theoretical Displacements
(See table page 4)

Maximum radial loads with outboard bearing

PGP/PGM315 (only SEC - 90)	720 lb.
PGP/PGM330	785 lb.
PGP/PGM350	1125 lb.
PGP/PGM365	1460 lb.

Pump Inlet Pressure
30 psia (15psig) maximum pressure/5 in. Hg maximum vacuum at operating temperature

Outlet Pressure
(See table page 4)

Hydraulic Fluids
Mineral oil, fire resistant fluids:
- water-oil emulsions 60/40, HFB
- water-glycol, HFC
- phosphate-esters, HFD (FPM seals required)

Fluid temperature
Mineral oil with standard seals:
0° to 180° F (-20° C to +80° C)
Fire resistant fluids HFB, HFC
0° to 150° F (-20° C to +65° C)

Fluid velocity
From 7.5 to 1600 cSt (50 to 7500 sus)
Recommended 15 to 75 cSt

Filtration
ISO 4406 code:
- 19/16 at 2000 psi/ 140 bar
- 17/14 at 3000 psi/ 210 bar
- 15/12 at 4000 psi/ 275 bar

Flow Viscosity
Mineral oil and HFD:
- Inlet up to 8 fps/ 2.5 m/s
- Outlet up to 18 fps/ 6,0 m/s

Fire resistant fluids HFB, HFC
- Inlet up to 5 fps/ 1.5 m/s
- Outlet up to 13 fps/ 4.0 m/s

Multiple Pump Assemblies
Up to 6 gear sections of the same model, even with different gear widths

Piggyback Assemblies
Several models can be mounted together, one at the rear of the other. Fluids will intermix even with separate reservoirs: PGP/PGM330/315, PGP/PGM350/315, PGP/PGM365/330, PGP/PGM365/330/315

Add-a-pump assemblies
Similar to piggyback, but fluids are not intermixed.
PGP330/Al (Al: aluminum pumps)
PGP350/Al, PGP350/315, PGP350/330, PGP350/350, PGP365/Al, PGP365/315, PGP365/330, PGP365/350

Pumps With Priority Outlet Load Sensing Availability
Available for models PGP315, PGP330, PGP350
- For operation outside given parameters, please consult the representative in your area.
- The smallest gear width of each model is not recommended for single units at the maximum rated pressure
- Theoretical displacement is equal to the theoretical flow at 1000 rpm.

Porting

SAE Flanged Ports Metric Thread (SSM)

Port Size inch	Port Size mm	A mm	B mm	C mm	D mm
0.50	12.7	17.5	38.1	M 8x1.25	23.9
0.75	19.1	22.2	47.6	M 10x1.50	22.4
1.00	25.4	26.2	52.2	M 10x1.50	22.4
1.25	31.8	30.2	58.7	M 10x1.50	28.4
1.50	36.1	35.7	69.9	M 12x1.75	26.9
2.00	50.8	42.9	77.8	M 12x1.75	26.9
2.50	63.5	50.8	88.9	M 12x1.75	30.2

SAE Flanged Ports UNC Thread (SSS)

Port Size inch	Port Size mm	A mm	B mm	C mm	D mm
0.50	12.7	17.5	38.1	5/16"-18	23.9
0.75	19.1	22.2	47.6	3/8"-16	22.4
1.00	25.4	26.2	52.2	3/8"-16	22.4
1.25	31.8	30.2	58.7	7/16"-14	28.4
1.50	36.1	35.7	69.9	1/2"-13	26.9
2.00	50.8	42.9	77.8	1/2"-13	26.9
2.50	63.5	50.8	88.9	1/2"-13	30.2

British Standard Pipe Parallel (BSPP)

BSPP	A mm	B mm	C mm	D mm
0.50"-14	19.00	34.0	2.5	14.0
0.75"-14	24.50	40.0	2.5	16.0
1.00"-11	30.75	50.0	2.5	18.0
1.25"-11	39.50	58.0	2.5	20.0
1.50"-11	45.25	64.0	2.5	22.0
2.00"-11	56.25	78.0	3.0	24.0

SAE Straight Thread (ODT)

ODT	A UNF	B mm	C mm	D mm	E mm
1/2"	3/4"-16	14.3	30.2	2.4	2.55
5/8"	7/8"-14	16.7	34.1	2.4	2.55
3/4"	1-1/16"-12	19.1	41.3	2.4	3.30
7/8"	1-3/16"-12	19.1	44.8	2.4	3.30
1"	1-5/16"-12	19.1	48.5	2.4	3.30
1-1/4"	1-5/8"-12	19.1	57.7	2.4	3.35
1-1/2"	1-7/8"-12	19.1	65.0	2.4	3.35
2"	2-1/2"-12	19.1	88.4	2.4	3.35

SAE Flange

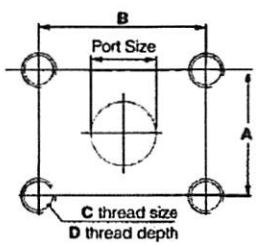

Drive Shaft
Maximum Input Torque

Shaft Style		• integral: 1 • 2 pieces: 2	315 lb-ft Nm	330 lb-ft Nm	350 lb-ft Nm	365 lb-ft Nm
SAE A	splined - 9 teeth	1	80 109	-	-	-
		2	-	-	-	-
	5/8" keyed	1	62 84	-	-	-
		2	-	-	-	-
SAE B	splined - 13 teeth	1	242 328	242 328	242 328	242 328
		2	-	159 215	242 328	242 328
	7/8" keyed	1	167 226	167 226	167 226	167 226
		2	-	159 215	167 226	167 226
SAE BB	splined - 15 teeth	1	-	371 503	371 503	371 503
		2	-	159 215	300 407	371 503
	1" keyed	1	-	250 339	250 339	250 339
		2	-	159 215	250 339	250 339
SAE C	splined - 14 teeth	1	-	-	708 960	708 960
		2	-	159 215	300 407	533 723
	1.25" keyed	1	-	-	500 678	500 678
		2	-	159 215	300 407	500 678
			-	-		-
DIN 5462 B8 x 32 x 36		2	-	159 215	300 407	-
DIN 254 taper 1:5		1	55 74	-		-
Connecting Shaft			90 122	159 215	300 407	533 723

British Standards

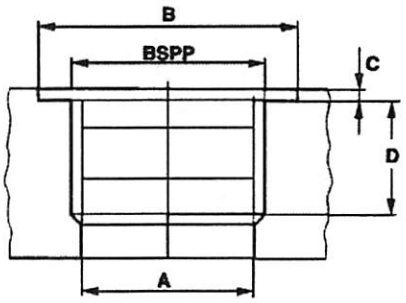

SAE Straight

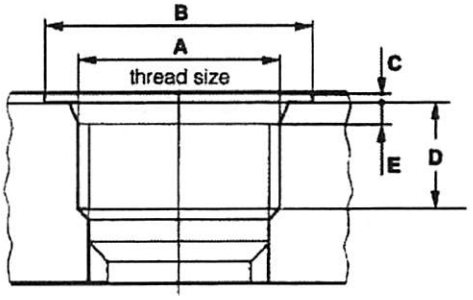

Parker Hannifin Corporation
Gear Pump Division
Youngstown, Ohio USA

PGP/PGM315, PGP/PGM330, PGP/PGM350, PGP/PGM365 Performance Curves

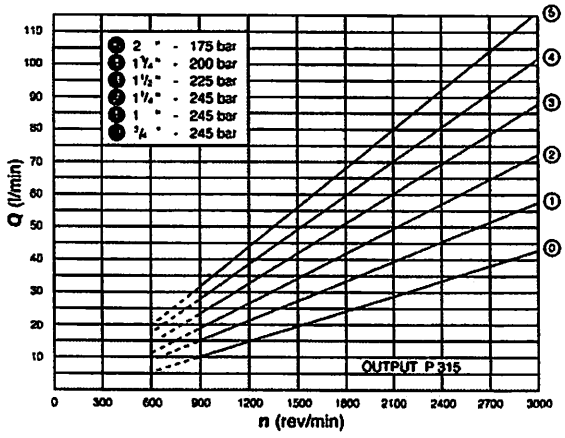

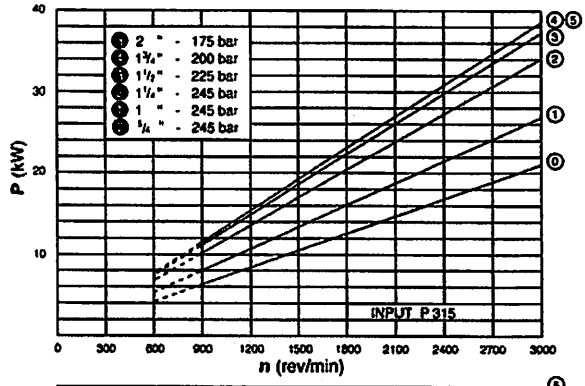

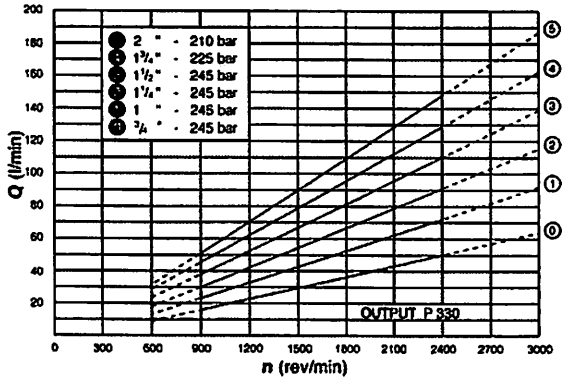

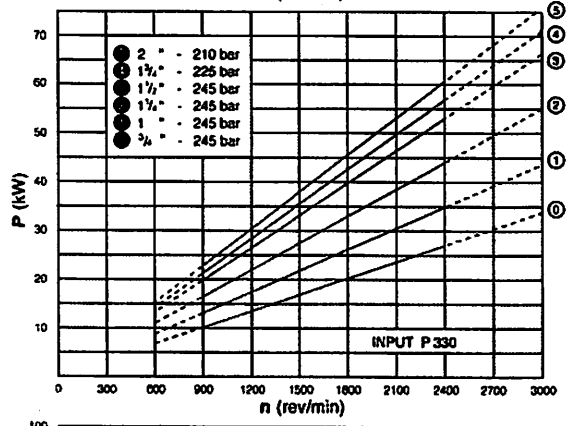

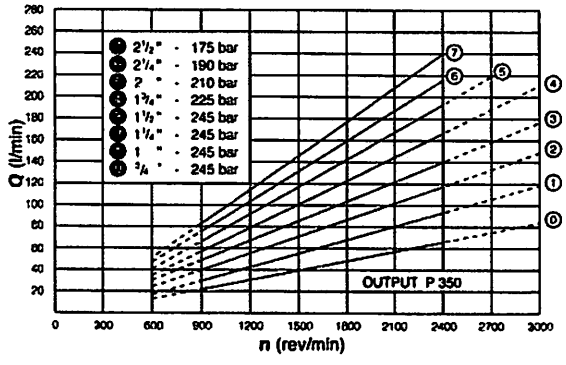

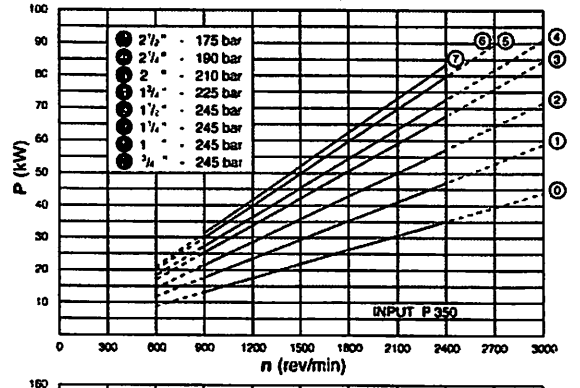

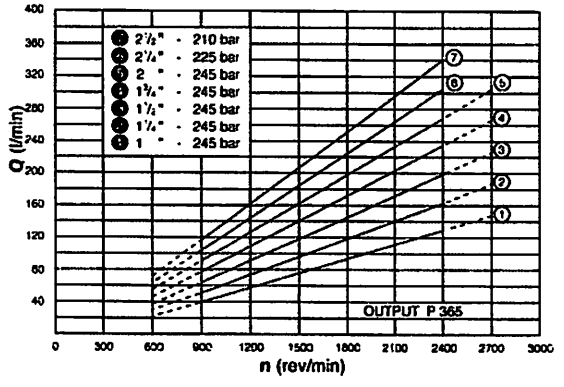

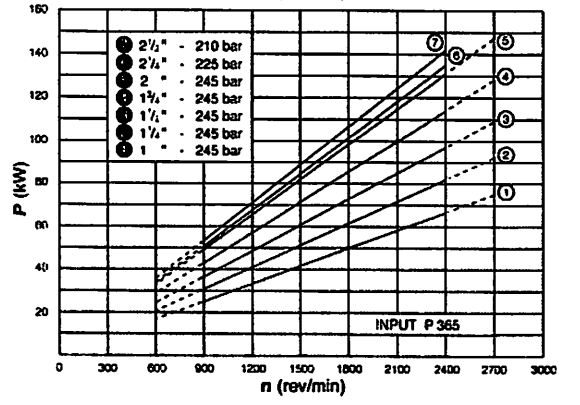

Parker Hannifin Corporation
Gear Pump Division
Youngstown, Ohio USA

Dimensional Data

Single Pumps & Motors

Model	Dimensions Inches/mm									
	A	B	C**	D*	E	F	G	H	J(P)	J(M)
PGP/PGM315	4.27+GW	4.75	4.25	1.62	1.88	2.00	.75	3.27+GW	4.0	4.19
	108.5+GW	120.7	108.0	41.1	47.8	50.8	19.1	83.1+GW	101.6	106.4
PGP/PGM330	6.19+GW	5.88	6.88	1.62	3.12	2.56	.88	4.94+GW	4.81	5.00
	157.2+GW	149.4	174.8	41.1	79.2	65.0	22.2	125.5+GW	122.2	127.0
PGP/PGM350	7.06+GW	6.00	7.12	2.19	3.50	3.06	1.00	5.56+GW	5.75	5.75
	179.3+GW	152.4	108.8	55.6	88.9	77.7	25.4	141.2+GW	146.1	146.1
PGP/PGM365	7.31+GW	7.25	7.38	2.19	3.75	3.06	1.12	5.81+GW	6.25	6.25
	185.7+GW	184.2	187.5	55.6	95.3	77.7	28.6	147.6+GW	158.8	158.8

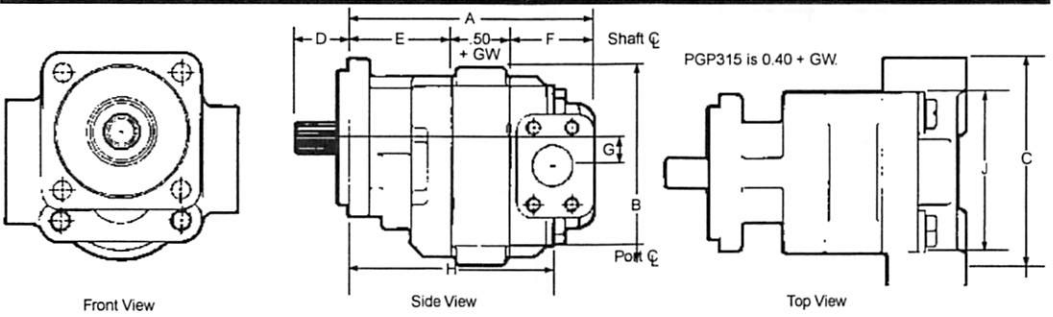

Tandem Pumps & Motors

Model	Dimensions Inches/mm														
	A	B	C**	D*	E	F	G	H	I	J	K	L**	M**	N(P)	N(M)
PGP/PGM 315	7.05+T.GW	4.75	5.00	1.62	1.88	1.75	2.62	1.84	.34	.75	3.59+GW	2.25	2.75	4.0	4.19
	179.1+T.GW	120.7	127.0	41.1	47.8	44.5	66.5	46.7	8.6	19.1	91.2+GW	57.2	69.9	101.6	106.4
PGP/PGM 330	9.88+T.GW	5.88	6.78	1.62	3.12	2.25	3.50	2.38	.62	.88	5.38+GW	3.09	3.69	4.81	5.00
	250.9+T.GW	149.4	172.2	41.1	79.2	57.2	88.9	60.5	15.7	22.2	136.7+GW	78.5	93.7	122.2	127.0
PGP/PGM 350	10.25+T.GW	6.00	7.69	2.19	3.50	2.25	3.50	2.50	.50	1.00	5.75+GW	3.56	4.12	5.75	5.75
	260.4+T.GW	152.4	195.3	55.6	88.9	57.2	88.9	63.5	12.7	25.4	146.1+GW	90.4	104.6	146.1	146.1
PGP/PGM 365	11.38+T.GW	7.25	8.38	2.19	3.75	2.62	4.00	2.88	.62	1.12	6.25+GW	3.69	4.69	6.25	6.25
	289.1+T.GW	184.2	212.9	55.6	95.3	66.5	101.6	73.3	15.7	28.6	158.8+GW	93.7	119.1	158.8	158.8

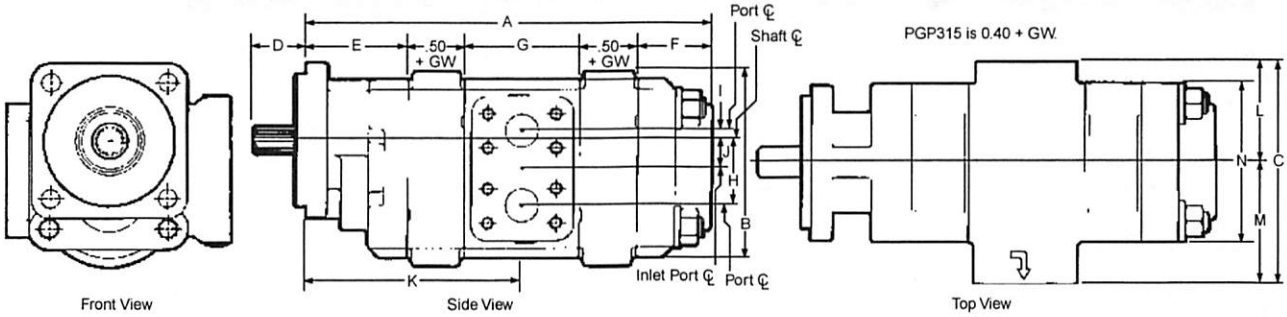

* This dimension will vary with type of drive shaft. ** This dimension will vary with type of ports. T=Total.

Weights

The following are the approximate weights of a single 1" gear section in each frame size:

PGP/PGM315 ... 18 lbs. PGP/PGM330 ..... 36 lbs.
PGP/PGM350 ... 51 lbs. PGP/PGM365 ..... 56 lbs.

For each additional 1/4" of gear width add:

PGP/PGM315 ..... 1 lb. PGP/PGM330 ... 1- 1/4 lbs.
PGP/PGM350 ... 1-1/2 lbs. PGP/PGM365 ..... 2-1/2 lbs.

To find the approximate weight of a multiple section assembly, add the weight of each section as a single. For the PGP/PGM330 frame size subtract 10% from this figure.

Parker Hannifin Corporation
Gear Pump Division
Youngstown, Ohio USA

PGP315 Pump Performance Data

speed rpm	output flow / input power	Gear Widths 1/2"	3/4"	1"	1-1/4"	1-1/2"	1-3/4"	2"
900	GPM	2.0	3.2	4.4	5.5	6.7	7.9	9.0
	LPM	8	12	17	21	26	30	34
	HP	5	8	11	13	15	15	15
	kW	4	6	8	10	11	11	11
1200	GPM	2.8	4.4	6.0	7.6	9.2	10.7	12.2
	LPM	11	17	23	29	35	40	46
	HP	7	11	14	18	20	21	20
	kW	5	8	11	13	15	15	15
1500	GPM	3.6	5.6	7.7	9.6	11.6	13.5	15.4
	LPM	14	21	29	36	44	51	58
	HP	9	13	18	22	25	26	25
	kW	7	10	13	16	19	19	19
1800	GPM	4.4	6.8	9.3	11.6	14.0	16.3	18.6
	LPM	17	26	35	44	53	62	70
	HP	11	16	21	27	30	31	30
	kW	8	12	16	20	22	23	23
2100	GPM	5.2	8.1	10.9	13.6	16.4	19.1	21.8
	LPM	20	30	41	51	62	72	83
	HP	12	19	25	31	35	36	35
	kW	9	14	18	23	26	27	26
2400	GPM	6.0	9.3	12.5	15.6	18.8	21.9	25.1
	LPM	23	35	47	59	71	83	95
	HP	14	21	28	35	40	41	40
	kW	11	16	21	26	30	31	30
3000	GPM	7.7	11.7	15.7	19.6	23.7	27.6	31.5
	LPM	29	44	59	74	90	104	119
	HP	18	27	35	44	50	51	51
	kW	13	20	26	33	37	38	38

Performance data shown are the average results based on a series of laboratory tests of production units and are not necessarily representative of any one unit. Tests were run with the oil reservoir temperature at 120°F and viscosity 150 SUS at 100°F.

Note: Pump output flow is at the maximum rated pressure (see page 15).

PGM315 Motor Performance Data

Speed RPM	Output Torque	Gear Widths 1" 3500 psi A	B	1-1/4" 3500 psi A	B	1-1/2" 3300 psi A	B	1-3/4" 2900 psi A	B	2" 2500 psi A	B
900	in/lbs	7.1	665	8.3	830	9.6	940	10.9	965	12.2	950
	Nm	27	75.1	32	93.8	37	106.2	41	109.0	46	107.3
1200	in/lbs	8.8	665	10.5	830	12.2	940	13.8	965	15.5	950
	Nm	33	75.1	40	93.8	46	106.2	52	109.0	59	107.3
1500	in/lbs	10.6	660	12.6	825	14.7	935	16.7	955	18.8	945
	Nm	40	74.6	48	93.2	56	105.6	63	107.9	71	106.8
1800	in/lbs	12.3	655	14.7	820	17.2	930	19.6	950	22.1	940
	Nm	46	74.0	56	92.6	65	105.1	74	107.3	84	106.2
2100	in/lbs	14.0	655	16.8	820	19.7	930	22.5	950	25.4	940
	Nm	53	74.0	64	92.6	75	105.1	85	107.3	96	106.2
2400	in/lbs	15.7	640	18.9	800	22.2	910	25.4	930	28.8	920
	Nm	59	72.3	72	90.4	84	102.8	96	105.1	109	103.9
3000	in/lbs	19.0	640	23.0	800	27.2	905	31.2	925	35.3	915
	Nm	72	72.3	87	90.4	103	102.3	118	104.5	134	103.4

A: Input Flow GPM/LPM; B: Output Torque IN/LBS/Nm

Note: In accordance with our policy of continuing product development, we reserve the right to change specifications shown in this catalog without notice.

Parker Hannifin Corporation
Gear Pump Division
Youngstown, Ohio USA

PGP330 Pump Performance Data

speed rpm	output flow / input power	Gear Widths 1/2"	3/4"	1"	1-1/4"	1-1/2"	1-3/4"	2"
900	GPM	3.2	5.1	7.0	8.8	10.6	12.4	14.3
	LPM	12	19	26	33	40	47	54
	HP	9	13	17	21	26	28	29
	kW	6	10	13	16	19	21	22
1200	GPM	4.5	7.0	9.5	12.0	14.5	16.9	19.4
	LPM	17	26	36	45	55	64	73
	HP	11	17	23	28	34	37	39
	kW	8	13	17	21	25	28	29
1500	GPM	5.8	8.9	12.1	15.2	18.3	21.4	24.5
	LPM	22	34	46	57	69	81	93
	HP	14	21	28	35	43	46	49
	kW	11	16	21	26	32	34	36
1800	GPM	7.1	10.8	14.7	18.4	22.1	25.9	29.6
	LPM	27	41	55	70	84	98	112
	HP	17	26	34	43	51	55	58
	kW	13	19	25	32	38	41	44
2100	GPM	8.4	12.7	17.2	21.6	26.0	30.3	34.7
	LPM	32	48	65	82	98	115	131
	HP	20	30	40	50	60	65	68
	kW	15	22	30	37	44	48	51
2400	GPM	9.6	14.7	19.8	24.8	29.8	34.8	39.8
	LPM	36	55	75	94	113	132	151
	HP	23	34	45	57	68	74	78
	kW	17	25	34	42	51	55	58
3000	GPM	12.2	18.5	24.9	31.2	37.5	43.8	50.1
	LPM	46	70	94	118	142	166	190
	HP	28	43	57	71	85	92	97
	kW	21	32	42	53	64	69	73

Performance data shown are the average results based on a series of laboratory tests of production units and are not necessarily representative of any one unit. Tests were run with the oil reservoir temperature at 120°F and viscosity 150 SUS at 100°F.

Note: Pump output flow is at the maximum rated pressure (see page 16).

PGM330 Motor Performance Data

Speed RPM	Output Torque	Gear Widths 1" 3500 psi A	B	1-1/4" 3500 psi A	B	1-1/2" 3500 psi A	B	1-3/4" 3250 psi A	B	2" 3000 psi A	B
900	in/lbs	10.1	1010	12.3	1270	14.5	1530	16.7	1665	19.0	1770
	Nm	38	114.1	47	143.5	55	172.9	63	188.1	72	200.0
1200	in/lbs	12.8	1005	15.7	1265	18.6	1525	21.4	1660	24.3	1760
	Nm	49	113.6	59	142.9	70	172.3	81	187.6	92	198.9
1500	in/lbs	15.6	1000	19.1	1255	22.6	1515	26.1	1650	29.6	1750
	Nm	59	113.0	72	141.8	85	171.2	99	186.4	112	197.7
1800	in/lbs	18.4	995	22.5	1250	26.6	1505	30.8	1640	34.9	1740
	Nm	69	112.4	85	141.2	101	170.0	116	185.3	132	196.6
2100	in/lbs	21.1	990	25.9	1240	30.7	1495	35.4	1625	40.2	1720
	Nm	80	111.9	98	140.1	116	168.9	134	183.6	152	194.3
2400	in/lbs	23.9	985	29.3	1235	34.7	1480	40.1	1605	45.5	1695
	Nm	90	111.3	111	139.5	131	167.2	152	181.3	172	191.5
3000	in/lbs	29.2	980	35.9	1230	42.6	1475	49.3	1595	56.0	1685
	Nm	110	110.7	136	139.0	161	166.7	186	180.2	212	190.4

A: Input Flow GPM/LPM; B: Output Torque IN-LBS/Nm

Note: In accordance with our policy of continuing product development, we reserve the right to change specifications shown in this catalog without notice.

Parker Hannifin Corporation
Gear Pump Division
Youngstown, Ohio USA

PGP350 Pump Performance Data

speed rpm	output flow / input power	Gear Widths 1/2"	3/4"	1"	1-1/4"	1-1/2"	1-3/4"	2"	2-1/4"	2-1/2"
900	GPM	4.0	6.4	8.8	11.2	13.7	16.1	18.6	21.0	23.4
	LPM	15	24	33	42	52	61	70	79	89
	HP	11	17	22	28	33	36	38	39	40
	kW	8	12	17	21	25	27	28	29	30
1200	GPM	5.6	8.8	12.1	15.4	18.7	21.9	25.2	28.4	31.7
	LPM	21	33	46	58	71	83	95	108	120
	HP	15	22	30	37	44	48	51	52	53
	kW	11	17	22	28	33	36	38	39	39
1500	GPM	7.3	11.3	15.5	19.5	23.6	27.7	31.8	35.9	40.0
	LPM	28	43	59	74	89	105	120	136	151
	HP	18	28	37	46	55	60	63	65	66
	kW	14	21	28	34	41	45	47	49	49
1800	GPM	8.9	13.8	18.8	23.6	28.6	33.5	38.4	43.3	48.3
	LPM	34	52	71	89	108	127	145	164	183
	HP	22	33	44	55	67	72	76	78	79
	kW	17	25	33	41	50	54	57	58	59
2100	GPM	10.6	16.3	22.1	27.8	33.6	39.3	45.1	50.8	56.6
	LPM	40	62	84	105	127	149	171	192	214
	HP	26	39	52	65	78	84	89	91	92
	kW	19	29	39	48	58	63	66	68	69
2400	GPM	12.2	18.8	25.4	31.9	38.5	45.1	51.7	58.2	64.8
	LPM	46	71	96	121	146	171	196	220	245
	HP	30	44	59	74	89	96	101	105	106
	kW	22	33	44	55	66	72	76	78	79

Performance data shown are the average results based on a series of laboratory tests of production units and are not necessarily representative of any one unit. Tests were run with the oil reservoir temperature at 120°F and viscosity 150 SUS at 100°F.

Note: Pump output flow is at the maximum rated pressure (see page 18).

PGM350 Motor Performance Data

Speed RPM	Input Torque	Gear Widths 1" 3500 psi A	B	1-1/4" 3500 psi A	B	1-1/2" 3500 psi A	B	1-3/4" 3250 psi A	B	2" 3000 psi A	B	2-1/4" 2750 psi A	B	2-1/2" 2500 psi A	B
900	in/lbs	13.4	1320	16.0	1670	18.6	2025	21.2	2225	23.8	2350	26.4	2425	28.9	2450
	Nm	51	149.1	61	188.7	70	228.8	80	251.4	90	265.5	100	274.0	110	276.8
1200	in/lbs	16.9	1315	20.4	1660	23.8	2015	27.2	2215	30.6	2340	34.0	2410	37.4	2435
	Nm	64	148.6	77	187.6	90	227.7	103	250.3	116	264.4	129	272.3	142	275.1
1500	in/lbs	20.5	1300	24.7	1640	28.9	1990	33.2	2195	37.4	2315	41.7	2385	45.9	2410
	Nm	77	146.9	93	185.3	110	224.8	126	248.0	142	261.6	158	269.5	174	272.3
1800	in/lbs	24.0	1295	29.0	1635	34.1	1980	39.2	2180	44.2	2300	49.3	2375	54.4	2395
	Nm	91	146.3	110	184.7	129	223.7	148	246.3	167	259.9	187	268.3	206	270.6
2100	in/lbs	27.5	1285	33.4	1620	39.3	1965	45.2	2165	51.1	2285	57.0	2355	62.9	2380
	Nm	104	145.2	126	183.0	149	222.0	171	244.6	193	258.2	216	266.1	238	268.9
2400	in/lbs	31.0	1265	37.7	1600	44.4	1940	51.2	2135	57.9	2255	64.6	2325	71.3	2350
	Nm	117	142.9	143	180.8	168	219.2	194	241.2	219	254.8	245	262.7	270	265.5

A: Input Flow GPM/LPM; B: Output Torque IN/LBS/Nm

Note: In accordance with our policy of continuing product development, we reserve the right to change specifications shown in this catalog without notice.

Parker Hannifin Corporation
Gear Pump Division
Youngstown, Ohio USA

PGP365 Pump Performance Data

speed rpm	output input	Gear Widths 3/4"	1"	1-1/4"	1-1/2"	1-3/4"	2"	2-1/4"	2-1/2"
900	GPM	8.0	11.5	14.9	18.4	21.8	25.4	28.8	32.3
	LPM	30	44	57	70	83	96	109	122
	HP	24	31	39	47	55	63	66	67
	kW	18	23	29	35	41	47	49	50
1200	GPM	11.5	16.2	20.8	25.5	30.0	34.7	39.3	44.0
	LPM	44	61	79	96	114	131	149	166
	HP	31	42	52	63	73	84	88	90
	kW	23	31	39	47	55	63	65	67
1500	GPM	15.0	20.9	26.6	32.5	38.2	44.1	49.8	55.6
	LPM	57	79	101	123	145	167	188	211
	HP	39	52	66	79	92	105	110	112
	kW	29	39	49	59	68	78	82	84
1800	GPM	18.5	25.6	32.5	39.5	46.4	53.4	60.3	67.3
	LPM	70	97	123	149	176	202	228	255
	HP	47	63	79	94	110	126	131	135
	kW	35	47	59	70	82	94	98	101
2100	GPM	22.0	30.2	38.3	46.5	54.6	62.8	70.8	79.0
	LPM	83	114	145	176	207	238	268	299
	HP	55	73	92	110	128	147	153	157
	kW	41	55	68	82	96	110	114	117
2400	GPM	25.6	34.9	44.2	53.5	62.8	72.1	81.4	90.7
	LPM	97	132	167	203	238	273	308	343
	HP	63	84	105	126	147	168	175	180
	kW	47	63	78	94	110	125	131	134

Performance data shown are the average results based on a series of laboratory tests of production units and are not necessarily representative of any one unit. Tests were run with the oil reservoir temperature at 120°F and viscosity 150 SUS at 100°F.

Note: Pump output flow is at the maximum rated pressure (see page 20).

PGM365 Motor Performance Data

Speed RPM	Input Torque	Gear Widths 1" 3500 psi A	B	1-1/4" 3500 psi A	B	1-1/2" 3500 psi A	B	1-3/4" 3500 psi A	B	2" 3500 psi A	B	2-1/4" 3250 psi A	B	2-1/2" 3000 psi A	B
900	in/lbs	18.4	1865	22.0	2355	25.6	2860	29.2	3370	32.9	3850	36.5	4020	40.1	4125
	Nm	70	210.7	83	266.1	97	323.1	111	380.8	124	435.0	138	454.2	152	466.1
1200	in/lbs	23.3	1845	28.1	2330	32.9	2830	37.6	3335	42.4	3810	47.2	3980	52.0	4080
	Nm	88	208.5	106	263.3	124	319.7	142	376.8	160	430.5	179	449.7	197	461.0
1500	in/lbs	28.2	1815	34.1	2295	40.1	2780	46.0	3280	52.0	3750	57.9	3915	63.8	4020
	Nm	107	205.1	129	259.3	152	314.1	174	370.6	197	423.7	219	442.3	242	454.2
1800	in/lbs	33.1	1805	40.2	2280	47.3	2765	54.4	3265	61.5	3730	68.6	3895	75.7	3995
	Nm	125	203.9	152	257.6	179	312.4	206	368.9	233	421.4	260	440.1	287	451.4
2100	in/lbs	37.9	1755	46.2	2220	54.4	2690	62.8	3160	71.1	3610	79.3	3770	87.6	3865
	Nm	144	198.3	175	250.8	206	303.9	238	357.0	269	407.9	300	426.0	332	436.7
2400	in/lbs	42.8	1705	52.3	2155	61.7	2615	71.2	3055	80.6	3490	90.1	3645	99.5	3740
	Nm	162	192.6	198	243.5	234	295.5	269	345.2	305	394.3	341	411.8	377	422.6

A: Input Flow GPM/LPM; B: Output Torque IN/LBS/Nm

Note: In accordance with our policy of continuing product development, we reserve the right to change specifications shown in this catalog without notice.

Parker Hannifin Corporation
Gear Pump Division
Youngstown, Ohio USA

PGP400 Series Pumps

The PGP400 series of high pressure, fixed displacement gear pumps are available in single and multiple assemblies. These units are rated for service up to 4500 psi. They're available in three models offering you a displacement range from 1.5 to 5.5 CIR.

These units are cast from high-strength iron which provides the structural integrity needed at high pressures. Gear widths have been selected to keep shaft deflections and bearing loads within acceptable design limits. Body seals have been strengthened and the fastener pre-load increased to assure reliability under high pressure conditions.

A wide variety of SAE B and C mounting flanges and drive shaft configurations are available. Porting is through SAE split flange or "O" ring fitting. Special hardened steel alloy gears with integral drive shaft run between pressure-balanced, bronze wear plates to make these rugged pumps highly efficient. Long shaft journals provide superior bearing surfaces and add to long service life.

Pumps can be assembled for rotation in either direction.

Displacement per inch of gear

PGP430	1.97 CIR
PGP450	2.55 CIR
PGP465	3.60 CIR

Performance Data

The performance data shown on the adjacent page are the average results based on a series of laboratory tests of production units and are not necessarily representative of any one unit. Tests were run at 4500 psi with the oil reservoir temperature at 180° F and viscosity of 150 SUS @ 100.

Oil Recommendations

The pumps work well on most good hydraulic oils as well as synthetic and fire resistant fluids. Please check with our Product Support Department before using any fire resistant or non-petroleum based fluid. Some of these products require special seals.

Viscosity – 50 SUS min. @ operating temperature
7500 SUS max. @ starting temperature
Viscosity index – 90 minimum
Analine point – 175 minimum
Additives – Foam depressant
Rust inhibitors
Maximum recommended system operating temperature with standard buna-N seals is 180° F or 83° C.

Dimensional Data

Single Units

Model	A	B	C	D	
PGP 430	6.88	5.88	4.94 + GW	6.19 + GW	Inches
	174.7	149.3	125.5 + GW	157.2 + GW	MM
PGP 450	7.12	6.00	5.56 + GW	7.06 + GW	Inches
	108.8	152.4	141.2 + GW	179.3 + GW	MM
PGP 465	7.38	7.25	5.81 + GW	7.31 + GW	Inches
	187.4	184.1	147.6 + GW	185.7 + GW	MM

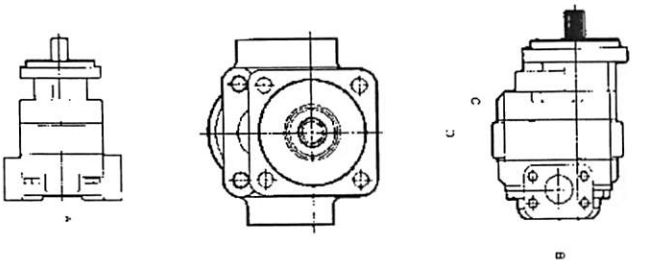

Multiple Units

Model	A	B	C	D	
PGP 430	6.78	5.88	5.38 + GW	9.88 + GW	Inches
	172.2	149.3	136.7 + GW	250.9 + GW	MM
PGP 450	7.68	6.00	5.75 + GW	10.25 + GW	Inches
	195.1	152.4	146.8 + GW	254.6 + GW	MM
PGP 465	8.38	7.25	6.25 + GW	11.38 + GW	Inches
	212.8	184.1	158.7 + GW	289.0 + GW	MM

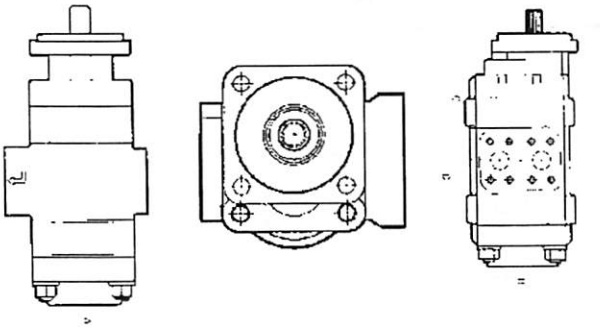

Parker Hannifin Corporation
Gear Pump Division
Youngstown, Ohio USA

PGP430 Pumps

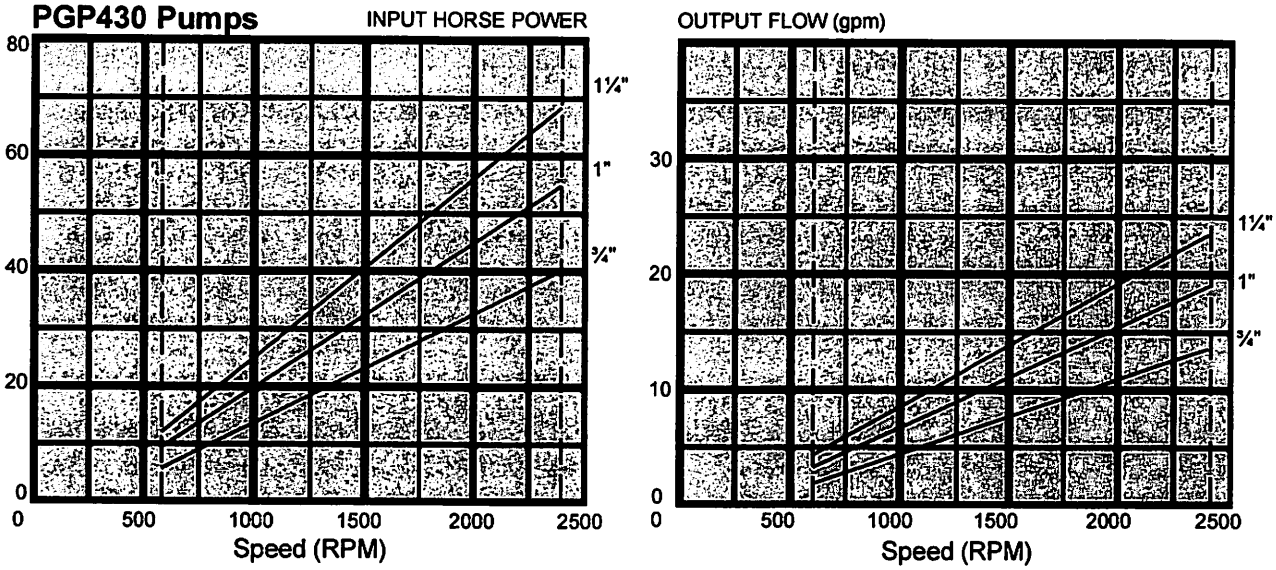

PGP450 Pumps

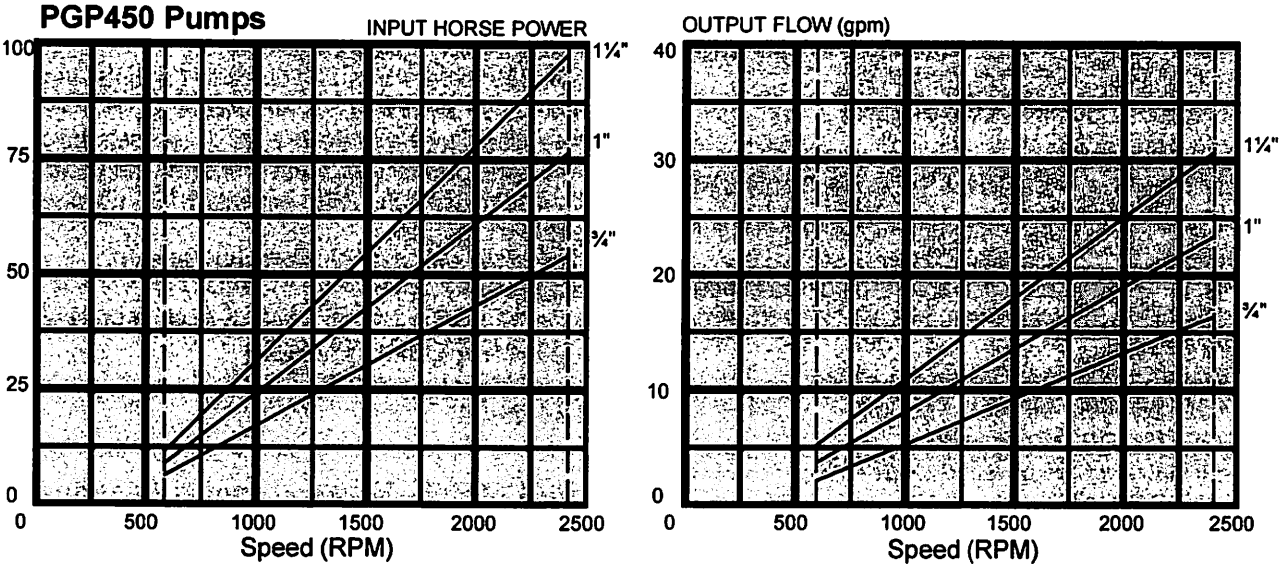

PGP465 Pumps

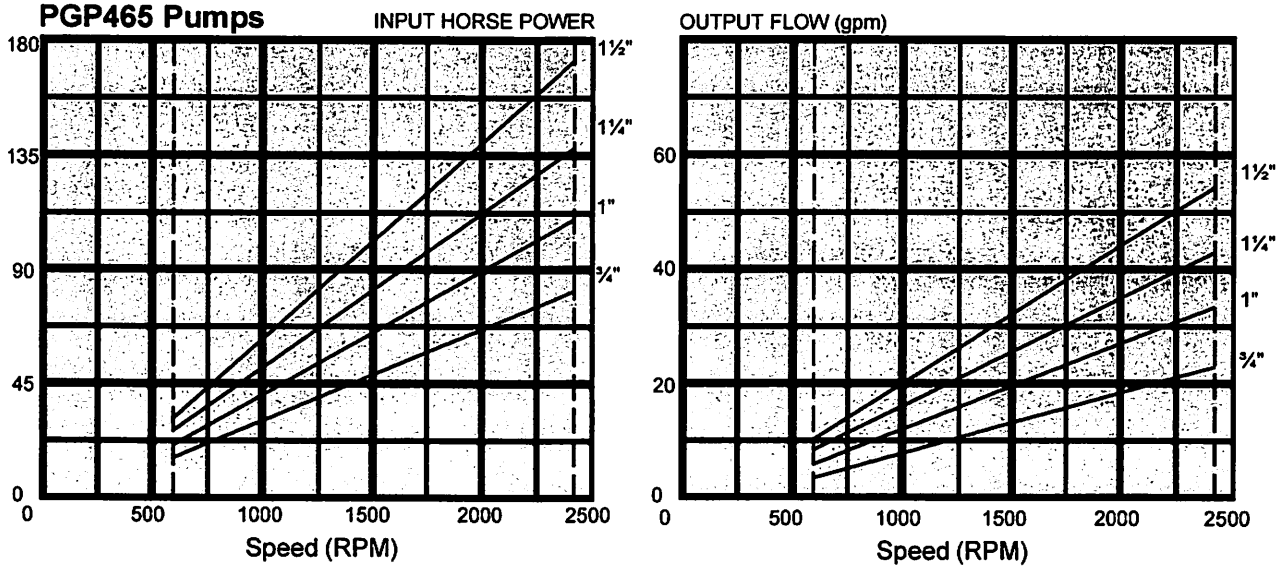

Parker Hannifin Corporation
Gear Pump Division
Youngstown, Ohio USA

Special Assemblies for Gear Pumps and Motors

Contact Product Support for more information.

We became the market leading manufacturer of hydraulic gear pumps for mobile equipment by anticipating customer needs and developing engineered solutions to meet them. While we offer a broad range of standard gear pumps and motors for most applications, we recognize that standard equipment may not always be the best solution. We are always ready and able to discuss special applications and provide practical, cost-effective, well-engineered solutions to your special hydraulic system needs. Here are a few examples of our engineering and manufacturing skills.

PGP/PGM315 Series - Special Assemblies

- PGP/PGM315 gears with various drive shafts
- PGP315 port end cover with built-in relief valve Tandem use only - no inlet port available
- PGP315 port end cover with side ports up to 1-1/2" S.F. inlet
- PGP315 port end cover with integral priority valve Built-in relief valve on primary circuit
- Clutch pump mount model available

PGP/PGM330 Series - Special Assemblies

- PGP330 dual outlet pump bearing carrier that will accept a 2-1/2" S.F. inlet port
- PGP/PGM330 gears with optional number of gear teeth (10 tooth gears are standard; 13 tooth gears are optional)
- PGP/PGM330 gears with various drive shafts and gear widths
- PGP330/PGP315 piggyback
- PGP330 port end cover with side ports up to 2" S.F. inlet
- Narrow PGP330 dual rotation port end cover that accepts side and/or rear ports
- Narrow PGP330 port end cover that accepts side and/or rear ports
- PGP330 port end cover that accepts rear threaded ports
- PGP330 port end cover with integral priority valve No relief valve on primary circuit
- PGP330 pad mount shaft end cover with two drive shafts
- PGP330 SAE "B" 2 bolt short shaft end cover
- FD330 flow divider assemblies

PGP/PGM350 Series - Special Assemblies

- PGP/PGM350 gears with optional number of gear teeth (10 tooth gears are standard; 13 tooth gears are optional)
- PGP/PGM350 gears with various drive shafts and gear widths
- PGP350/PGP315 piggyback
- PGP350 add-a-pump port end cover with the ability to mount any pump that has an SAE "A" or "B" 2 bolt mounting flange and SAE "A" or "B" splined drive shaft
- PGP350 port end cover that is shorter and narrower than standard P350 PEC. Accepts 1-1/2" diameter beaded inlet tube
- PGP/PGM350 SAE "C" 4 bolt, ductile iron shaft end cover
- PGP/PGM350 SAE "B" 2 bolt short shaft end cover
- FD350 flow divider assemblies
- Double tapered bearing
- Pad mount

PGP/PGM365 Series - Special Assemblies

- P365 bearing carriers with special porting arrangements accept 3" S.F. inlet ports
- PGP/PGM365 gears with various drive shafts and gear widths
- PGP365/PGP330 piggyback
- PGP365 add-a-pump port end cover with the ability to mount any pump that has an SAE "A" or "B" 2 bolt mounting flange and SAE "A" or "B" splined drive shaft
- PGM365 SAE "C" 4 bolt, compacted graphite shaft end cover
- FD365 flow divider assemblies

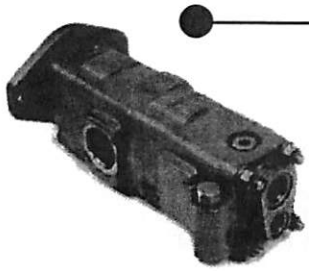

PGP315 Tandem Pump with Integral Port End Priority Valve

By incorporating the priority flow valve and relief valve in the port end housing, this design puts the added flow of a tandem to good use without requiring excessive mounting space for a bolt-on valve. The integral priority flow valve provides primary and secondary flow ports. Flow in excess of that required by the priority circuit may be routed to a power beyond function. These units may be used to provide power steering or braking requirements.

Load-sense Unloaders

These valves may be bolted to any standard pump outlet or used in-line between the pump and a load-sense control valve. Two sizes handle flows from 0-30 gpm and 30-60 gpm at pressures to 3500 psi. The unloader effectively modulates pump output relative to function pressure and flow requirements.

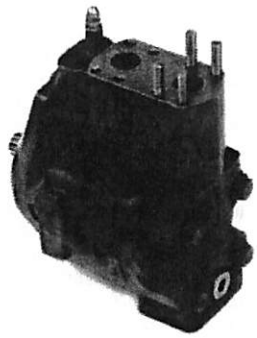

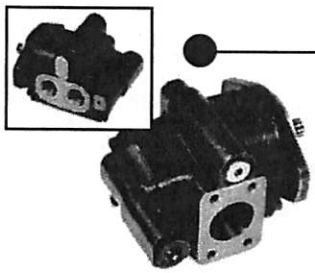

Charge/Lube Pump

The design of this unit takes advantage of relatively low pressure operating requirements (450 psi.) to reduce the number of cast iron components required for its two pump sections from five pieces to three. Relief valves for both sections are built into the pump body. The common journal carrier, one-piece steel drive shaft, and powdered metal driven gears contribute to the overall compactness of the design while providing charge and transmission lubrication flows.

Through Shaft Pump

An innovative design, this piggyback unit is driven by a common shaft that is actually the drive shaft of the machine to which it supplies two separate flows. The through shaft eliminates the need for a PTO, reduces the number of component parts and contributes to a lighter more compact machine design.

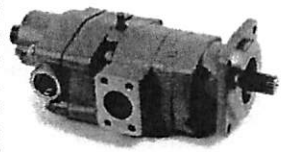

Pump with Shaft End Cover Ports

This unusually-shaped shaft end housing allows it to fit tight mounting spaces while maintaining smooth hydraulic line functions. The housing features integral port lobes that allow straight hydraulic line connections without line kinks or space robbing line loops. Overall length of the pump is reduced by eliminating typical gear housing ports.

Add-A-Pump

This special port end housing for 350 and 365 pumps allows a separate pump to be mounted to the rear of the unit as needed for optional machine functions or to provide flow from a separate reservoir. With bearing, lip seal and drain already in place, this special port end housing can accommodate any add-on pump with SAE A or B two-bolt mounting pattern and splined drive shaft.

The items described in this document and other documents or descriptions provided by Parker Hannifin Corporation, its subsidiaries and its authorized distributors are hereby offered for sale at prices to be established by Parker Hannifin Corporation, its subsidiaries and its authorized distributors. This offer and its acceptance by any customer ("Buyer") shall be governed by all of the following Terms and Conditions. Buyer's order for any such items, when communicated to Parker Hannifin Corporation, its subsidiary or an authorized distributor ("Seller") verbally or in writing, shall constitute acceptance of this offer.

1. Terms and Conditions of Sale: All descriptions, quotations, proposals, offers, acknowledgments, acceptances and sales of Seller's products are subject to and shall be governed exclusively by the terms and conditions stated herein. Buyer's acceptance of any offer to sell is limited to these terms and conditions. Any terms or conditions in addition to, or inconsistent with those stated herein, proposed by Buyer in any acceptance of an offer by Seller, are hereby objected to. No such additional, different or inconsistent terms and conditions shall become part of the contract between Buyer and Seller unless expressly accepted in writing by Seller. Seller's acceptance of any offer to purchase by Buyer is expressly conditional upon Buyer's assent to all the terms and conditions stated herein, including any terms in addition to, or inconsistent with those contained in Buyer's offer, Acceptance of Seller's products shall in all events constitute such assent.

2. Payment: Payment shall be made by Buyer net 30 days from the date of delivery of the items purchased hereunder. Amounts not timely paid shall bear interest at the maximum rate permitted by law for each month or portion thereof that the Buyer is late in making payment. Any claims by Buyer for omissions or shortages in a shipment shall be waived unless Seller receives notice thereof within 30 days after Buyer's receipt of the shipment.

3. Delivery: Unless otherwise provided on the face hereof, delivery shall be made F.O.B. Seller's plant. Regardless of the method of delivery, however, risk of loss shall pass to Buyer upon Seller's delivery to a carrier. Any delivery dates shown are approximate only and Seller shall have no liability for any delays in delivery.

4. Warranty: Seller warrants that the items sold hereunder shall be free from defects in material or workmanship for a period of 18 months from date of shipment from Parker Hannifin Corporation. **THIS WARRANTY COMPRISES THE SOLE AND ENTIRE WARRANTY PERTAINING TO ITEMS PROVIDED HEREUNDER. SELLER MAKES NO OTHER WARRANTY, GUARANTEE, OR REPRESENTATION OF ANY KIND WHATSOEVER. ALL OTHER WARRANTIES, INCLUDING BUT NOT LIMITED TO, MERCHANTABILITY AND FITNESS FOR PURPOSE, WHETHER EXPRESS, IMPLIED, OR ARISING BY OPERATION OF LAW, TRADE USAGE, OR COURSE OF DEALING ARE HEREBY DISCLAIMED. NOTWITHSTANDING THE FOREGOING, THERE ARE NO WARRANTIES WHATSOEVER ON ITEMS BUILT OR ACQUIRED WHOLLY OR PARTIALLY, TO BUYER'S DESIGNS OR SPECIFICATIONS.**

5. Limitation Of Remedy: SELLER'S LIABILITY ARISING FROM OR IN ANY WAY CONNECTED WITH THE ITEMS SOLD OR THIS CONTRACT SHALL BE LIMITED EXCLUSIVELY TO REPAIR OR REPLACEMENT OF THE ITEMS SOLD OR REFUND OF THE PURCHASE PRICE PAID BY BUYER, AT SELLER'S SOLE OPTION. IN NO EVENT SHALL SELLER BE LIABLE FOR ANY INCIDENTAL, CONSEQUENTIAL OR SPECIAL DAMAGES OF ANY KIND OR NATURE WHATSOEVER, INCLUDING BUT NOT LIMITED TO LOST PROFITS ARISING FROM OR IN ANY WAY CONNECTED WITH THIS AGREEMENT OR ITEMS SOLD HEREUNDER, WHETHER ALLEGED TO ARISE FROM BREACH OF CONTRACT, EXPRESS OR IMPLIED WARRANTY, OR IN TORT, INCLUDING WITHOUT LIMITATION, NEGLIGENCE, FAILURE TO WARN OR STRICT LIABILITY.

6. Changes, Reschedules and Cancellations: Buyer may request to modify the designs or specifications for the items sold hereunder as well as the quantities and delivery dates thereof, or may request to cancel all or part of this order, however, no such requested modification or cancellation shall become part of the contract between Buyer and Seller unless accepted by Seller in a written amendment to this Agreement. Acceptance of any such requested modification or cancellation shall be at Seller's discretion, and shall be upon such terms and conditions as Seller may require.

7. Special Tooling: A tooling charge may be imposed for any special tooling, including without limitation, dies, fixtures, molds and patterns, acquired to manufacture items sold pursuant to this contract. Such special tooling shall be and remain Seller's property notwithstanding payment of any charges by Buyer. In no event will Buyer acquire any interest in apparatus belonging to Seller which is utilized in the notwithstanding any charges paid by Buyer. Unless otherwise agreed, Seller shall have the right to alter, discard or otherwise dispose of any special tooling or other property in its sole discretion at any time.

8. Buyer's Property: Any designs, tools, patterns, materials, drawings, confidential information or equipment furnished by Buyer or any other items which become Buyer's property, may be considered obsolete and may be destroyed by Seller after two (2) consecutive years have elapsed without Buyer placing an order for the items which are manufactured using such property, Seller shall not be responsible for any loss or damage to such property while it is in Seller's possession or control.

9. Taxes: Unless otherwise indicated on the face hereof, all prices and charges are exclusive of excise, sales, use, property, occupational or like taxes which may be imposed by any taxing authority upon the manufacture, sale or delivery of the items sold hereunder. If any such taxes must be paid by Seller or if Seller is liable for the collection of such tax, the amount thereof shall be in addition to the amounts for the items sold. Buyer agrees to pay all such taxes or to reimburse Seller therefore upon receipt of its invoice. If Buyer claims exemption from any sales, use or other tax imposed by any taxing authority, Buyer shall save Seller harmless from and against any such tax, together with any interest or penalties thereon which may be assessed if the items are held to be taxable.

10. Indemnity For Infringement of Intellectual Property Rights: Seller shall have no liability for infringement of any patents, trademarks, copyrights, trade dress, trade secrets or similar rights except as provided in this Part 10. Seller will defend and indemnify Buyer against allegations of infringement of U.S. Patents, U.S. Trademarks, copyrights, trade dress and trade secrets (hereinafter 'Intellectual Property Rights'). Seller will defend at its expense and will pay the cost of any settlement or damages awarded in an action brought against Buyer based on an allegation that an item sold pursuant to this contract infringes the Intellectual Property Rights of a third party. Seller's obligation to defend and indemnify Buyer is contingent on Buyer notifying Seller within ten (10) days after Buyer becomes aware of such allegations of infringement, and Seller having sole control over the defense of any allegations or actions including all negotiations for settlement or compromise. If an item sold hereunder is subject to a claim that it infringes the Intellectual Property Rights of a third party, Seller may, at its sole expense and option, procure for Buyer the right to continue using said item, replace or modify said item so as to make it noninfringing, or offer to accept return of said item and return the purchase price less a reasonable allowance for depreciation. Notwithstanding the foregoing, Seller shall have no liability for claims of infringement based on information provided by Buyer, or directed to items delivered hereunder for which the designs are specified in whole or part by Buyer, or infringements resulting from the modification, combination or use in a system of any item sold hereunder. The foregoing provisions of this Part 10 shall constitute Seller's sole and exclusive liability and Buyer's sole and exclusive remedy for infringement of Intellectual Property Rights.

If a claim is based on information provided by Buyer or if the design for an item delivered hereunder is specified in whole or in part by Buyer, Buyer shall defend and indemnify Seller for all costs, expenses or judgments resulting from any claim that such item infringes any patent, trademark, copyright, trade dress, trade secret or any similar right.

11. Force Majeure: Seller does not assume the risk of and shall not be liable for delay or failure to perform any of Seller's obligations by reason of circumstances beyond the reasonable control of Seller (hereinafter 'Events of Force Majeure'). Events of Force Majeure shall include without limitation, accidents, acts of God, strikes or labor disputes, acts, laws, rules or regulations of any government or government agency, fires, floods, delays or failures in delivery of carriers or suppliers, shortages of materials and any other cause beyond Seller's control.

12. Entire Agreement/Governing Law: The terms and conditions set forth herein, together with any amendments, modifications and any different terms or conditions expressly accepted by Seller in writing, shall constitute the entire Agreement concerning the items sold, and there are no oral or other representations or agreements which pertain thereto. This Agreement shall be governed in all respects by the law of the State of Ohio. No actions arising out of the sale of the items sold hereunder or this Agreement may be brought by either party more than two (2) years after the cause of action accrues. 9/91P

Parker Hannifin Corporation
6035 Parkland Blvd.
Cleveland, Ohio 44124-4141
Telephone: (216) 896-3000
Fax: (216) 896-4000
Web site: www.parker.com

Parker Hannifin Corporation

About Parker Hannifin Corporation

Parker Hannifin is a leading global motion-control company dedicated to delivering premier customer service. A Fortune 500 corporation listed on the New York Stock Exchange (PH), our components and systems comprise over 1,400 product lines that control motion in some 1,000 industrial and aerospace markets. Parker is the only manufacturer to offer its customers a choice of hydraulic, pneumatic, and electromechanical motion-control solutions. Our Company has the largest distribution network in its field, with over 7,500 distributors serving more than 350,000 customers worldwide.

Parker's Charter

To be a leading worldwide manufacturer of components and systems for the builders and users of durable goods. More specifically, we will design, market and manufacture products controlling motion, flow and pressure. We will achieve profitable growth through premier customer service.

Product Information

North American customers seeking product information, the location of a nearby distributor, or repair services will receive prompt attention by calling the Parker Product Information Center at our toll-free number: 1-800-C-PARKER (1-800-272-7537). In the UK, a similar service is available by calling 0500-103-203.

The Aerospace Group is a leader in the development, design, manufacture and servicing of control systems and components for aerospace and related high-technology markets, while achieving growth through premier customer service.

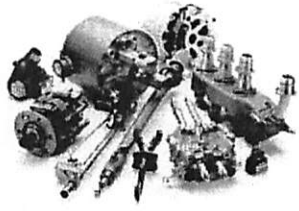

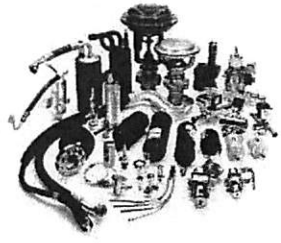

The Climate & Industrial Controls Group designs, manufactures and markets system-control and fluid-handling components and systems to refrigeration, air-conditioning and industrial customers worldwide.

The Fluid Connectors Group designs, manufactures and markets rigid and flexible connectors, and associated products used in pneumatic and fluid systems.

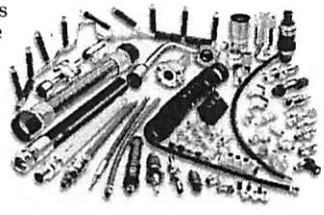

The Seal Group designs, manufactures and distributes industrial and commercial sealing devices and related products by providing superior quality and total customer satisfaction.

The Hydraulics Group designs, produces and markets a full spectrum of hydraulic compnents and systems to builders and users of industrial and mobile machinery and equipment.

The Filtration Group designs, manufactures and markets quality filtration and clarification products, providing customers with the best value, quality, technical support, and global availability.

The Automation Group is a leading supplier of pneu-matic and electro-mechanical components and systems to automation customers worldwide.

The Instrumentation Group is a global leader in the design, manufacture and distribution of high-quality critical flow components for worldwide processinstrumentation, ultra-high-purity, medical and analytical applications.

Parker Hannifin Corporation
Gear Pump Division
1775 Logan Avenue
Youngstown, OH 44501 USA
Tel: (330) 746-8011
Fax: (330) 746-1148
http://www.parker.com/gearpump

Catalog HY09-0300/US
2/04, T&M, 5M

Char-Lynn®
Hydraulic Motor

May, 1999

EATON

Parts Information

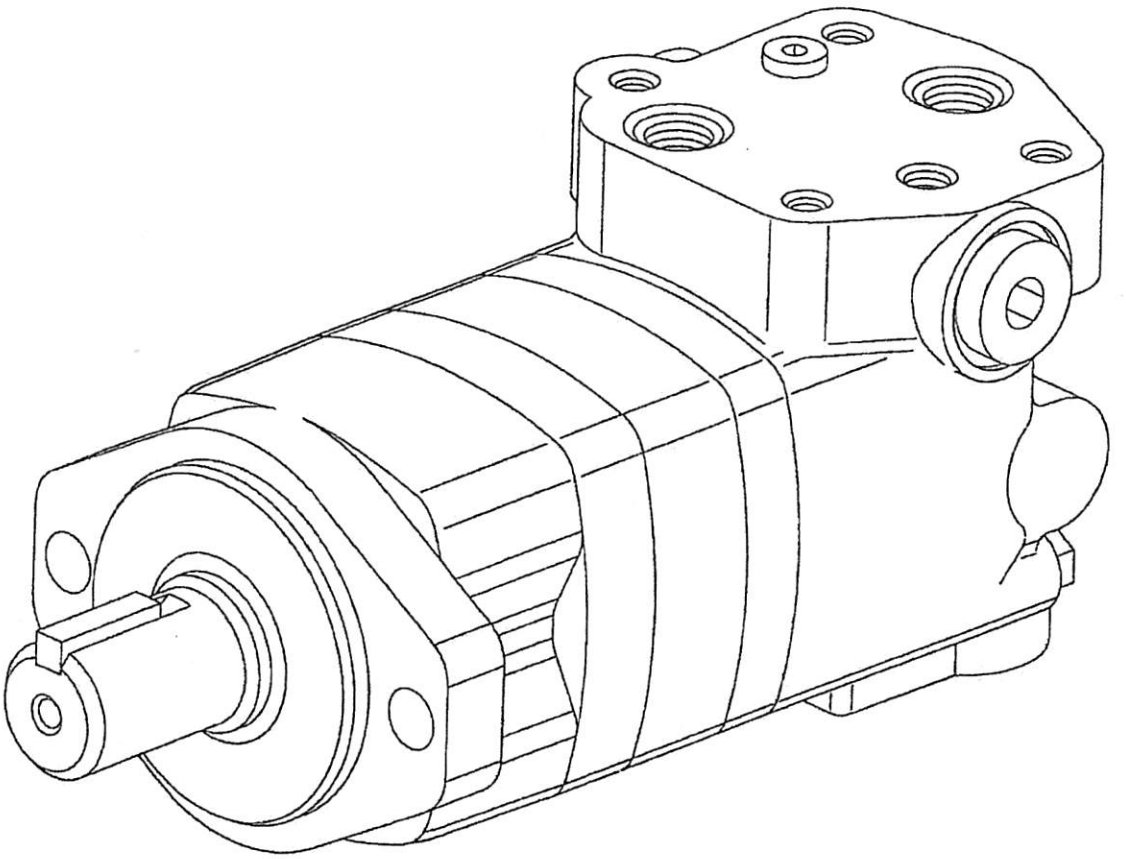

2000 Series — Two Speed
Disc Valve Geroler® Motor

001

Displacement cm^3/r [in^3/r]	Drive — Ref. No. 19 Part No.	Length mm [inch]	Geroler® — Ref. No. 22 Part No.	Width mm [inch]	Bolt — Ref. No. 44 Standard/Wheel Part No.	Length mm [in.]	Bolt — Ref. No. 44 Bearingless Part No.	Length mm [in.]
80 [4.9]	21371-009	76,2 [3.00]	21625-001	17,8 [.70]	14384-010	154,9 [6.10]	14384-006	135,4 [5.33]
100 [6.2]	21371-010	80,8 [3.18]	21625-002	22,5 [.88]	14384-020	159,8 [6.29]	14384-007	138,4 [5.45]
130 [8.0]	21371-004	87,2 [3.43]	21625-003	28,9 [1.14]	14384-012	164,5 [6.48]	14384-008	144,8 [5.70]
155 [9.6]	21371-004	87,2 [3.43]	21625-004	28,9 [1.14]	14384-012	164,5 [6.48]	14384-008	144,8 [5.70]
195 [11.9]	21371-005	94,0 [3.70]	21625-005	35,6 [1.40]	14384-021	172,5 [6.79]	14384-010	154,9 [6.10]
245 [14.9]	21371-006	103,1 [4.06]	21625-006	44,7 [1.76]	14384-014	182,4 [7.18]	14384-012	164,5 [6.48]
305 [18.7]	21371-007	114,6 [4.51]	21625-007	56,0 [2.21]	14384-015	191,5 [7.54]	14384-021	172,5 [6.79]
395 [24.0]	21371-008	130,4 [5.13]	21625-008	72,0 [2.83]	14384-022	208,8 [8.22]	14384-015	191,5 [7.54]
490 [29.8]	21371-012	147,9 [5.82]	21625-010	89,4 [3.52]	14384-032	226,3 [8.91]	—	—

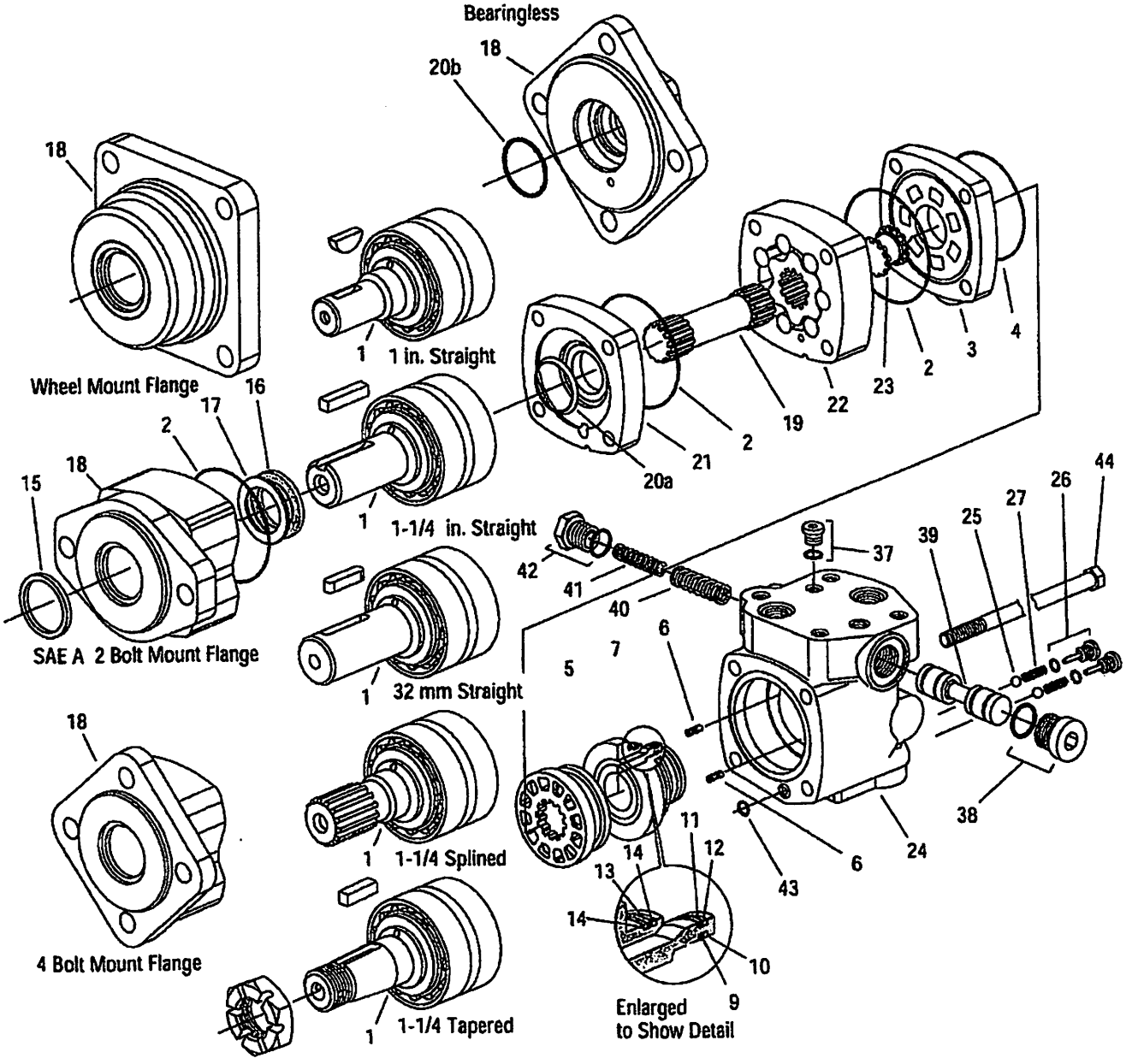

2000 Series — Two Speed Parts List

	Ref. No.	Part Number	Description	Quantity Standard	Wheel	Bearingless
	1	21618-001	Shaft and Bearing (1 inch Straight)	1	1	
		14193-000	Key (for 1 inch Straight)	1	1	
		21618-002	Shaft and Bearing (1-1/4 inch Straight)	1	1	
		14392-008	Key (for 1-1/4 inch Straight)	1	1	
		21618-003	Shaft and Bearing (1-1/4 inch Tapered)	1	1	
		14392-006	Key (for 1-1/4 inch Tapered)	1	1	
		14163-000	Nut (for 1-1/4 inch Tapered)	1	1	
		21618-004	Shaft and Bearing (1-1/4 inch Splined)	1	1	
		21618-023	Shaft and Bearing (32 mm Straight)	1	1	
		14460-005	Key (for 32 mm Straight)	1	1	
OX	2	14559-006	Seal 76 mm [3 in.] I.D.	3	3	2
	3	21722-000	Plate, Valve	1	1	1
OX	4	250002-039	Seal	1	1	1
	5	23047-000	Valve	1	1	1
	6	7383-000	Spring	2	2	2
	7	21601-000	Balance Ring S/A (w/Pins 2)	1	1	1
OX	9	250001-024	O-ring	1	1	
OX	10	14654-023	Ring, Back-up	1	1	1
OX	11	250001-028	O-ring	1	1	1
OX	12	14654-028	Ring, Back-up	1	1	1
OX	13	250001-031	O-ring	1	1	1
OX	14	14654-031	Ring Back-up	2	2	2
X	15	9121-001	Seal, Dust	1	1	
X	16	9057-009	Seal, Shaft	1	1	1
X	17	7382-000	Ring, Back-up	1	1	1
	18	21578-001	Housing, Bearing (Std. 2 Bolt SAE B 101,6 [4.00] Pilot Dia.) (Not Shown)	1		
		21578-003	Housing, Bearing (Wheel 4 Bolt 107,9 [4.25] Pilot Dia.)		1	
		21578-004	Housing, Bearing (2 Bolt SAE A 82,5 [3.25] Pilot Dia.)	1		
		21578-005	Housing, Bearing (4 Bolt 82,5 [3.25] Pilot Dia.)	1		
		21578-008	Housing, Bearing (4 Bolt Magneto 82,5 [3.25] Pilot Dia.) (Not Shown)	1		
		22382-000	Flange, Mounting (Bearingless 101,6 [4.00] Pilot Dia.)			1
	19	*	Drive	1	1	1
X	20a	9050-000	Seal, Face	1	1	
O	20b	15127-000	O-ring			1
	21	22026-000	Wear Plate	1	1	
	22	*	Geroler®	1	1	1
	23	8433-000	Drive, Main	1	1	1
	24	21602-001	Valve, Housing S/A (7/8-14 O-ring Ports (2) 7/16-20 Pilot Port)	1	1	1
	25	18026-000	Ball, Steel	2	2	2
	26	8350-000	Plug/ O-ring	2	2	2
OX		250003-903	O-ring	2	2	2

Continued on Page 4

* See Chart on Page 2

2000 Series — Two Speed

Continued from Page 3

27	6464-000	Spring, Compression	2	2	2
37	9072-003	Plug/O-ring	1	1	1
OX	250003-904	O-ring	1	1	1
38	9072-006	Plug/O-ring	1	1	1
OX	250003-908	O-ring	1	1	1
39	220449-000	Spool, Control	1	1	1
40	230304-000	Spring, Compression	1	1	1
41	230305-000	Spring, Compression	1	1	1
42	9151-002	Plug/O-ring	1	1	1
OX	250003-908	O-ring	1	1	1
OX 43	250002-012	O-ring	1	1	1
44	*	Bolt	4	4	4
X	61267-000	Seal Kit for Standard and Wheel Motors			
0	61266-000	Seal Kit for Bearingless Motors			
X	61274-000	Seal Kit for Standard and Wheel Motors (Viton)			

* See Chart on Page 2

How to Order Replacement Parts

Each Order Must Include the Following:

1. Product Number
2. Date Code
3. Part Name
4. Part Number
5. Quantity of Parts

For More Detailed Information Contact Eaton Corp. Hydraulics Division 15151 Highway 5 Eden Prairie, MN 55344.

- Specifications and performance data, Catalog No. 11-878
- When servicing 2000 Series — Two Speed Motors refer to Repair Information No. 7-131. This repair manual lists Tools required, and step by step disassembly and reassembly procedures.

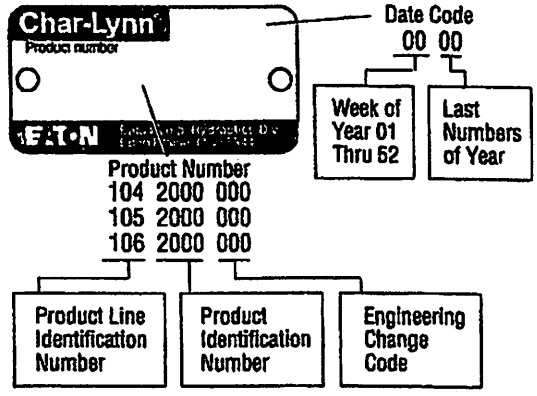

Eaton
Fluid Power Group
Hydraulics Business USA
14615 Lone Oak Road
Eden Prairie, MN 55344
USA
Tel: 952-937-9800
Fax: 952-294-7722
www.eaton.com/hydraulics

Eaton
Fluid Power Group
Hydraulics Business Europe
Route de la Longeraie 7
1110 Morges
Switzerland
Tel: +41 (0) 21 811 4600
Fax: +41 (0) 21 811 4601

Eaton
Fluid Power Group
Hydraulics Business Asia Pacific
11th Floor Hong Kong New World Tower
300 Huaihai Zhong Road
Shanghai 200021
China
Tel: 86-21-6387-9988
Fax: 86-21-6335-3912

Powering Business Worldwide

© 2008 Eaton Corporation
All Rights Reserved
Printed in USA
Document No. C-MDLO-TP009-E
Supersedes 05-134
November 2008

NO. 7-131

Eaton
Hydraulics
Division

Repair Information

2000 Series Char-Lynn® Motors –Two Speed 001

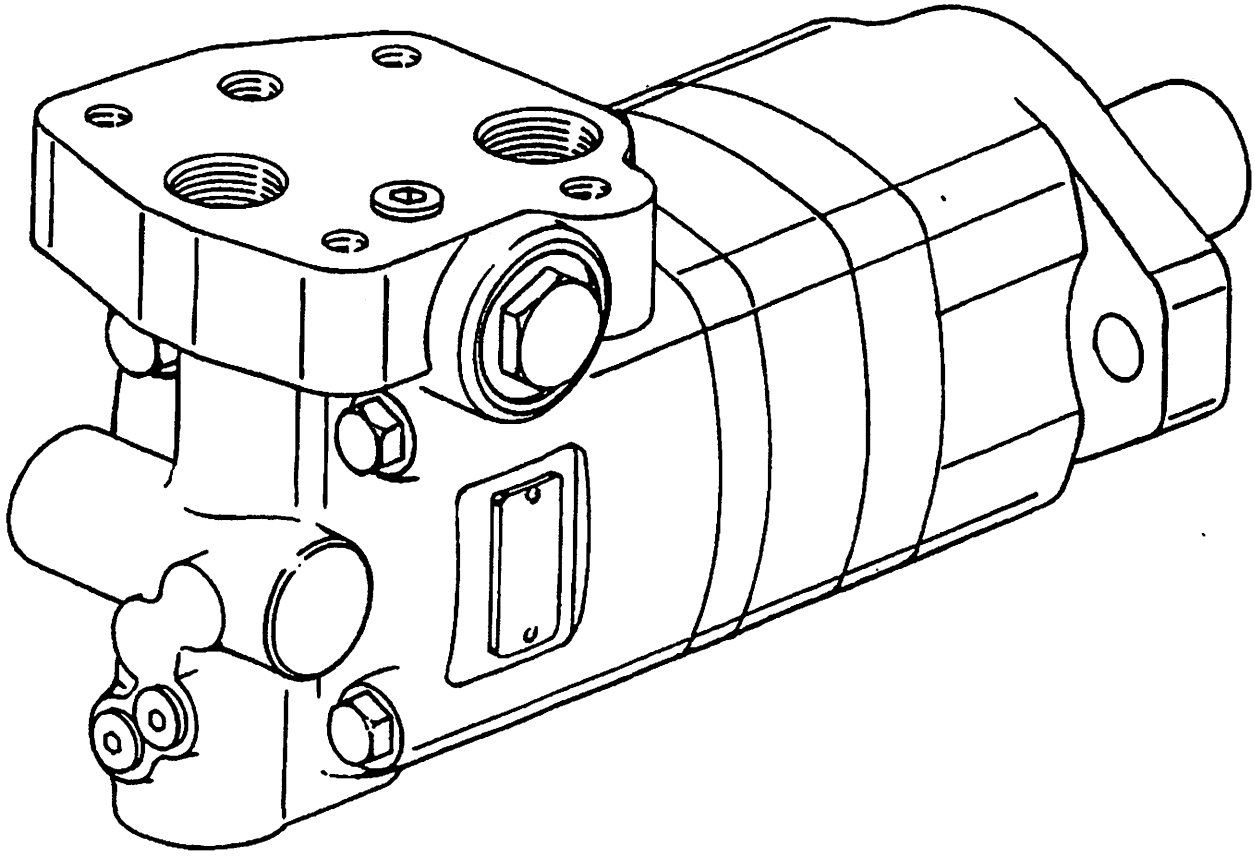

EATON

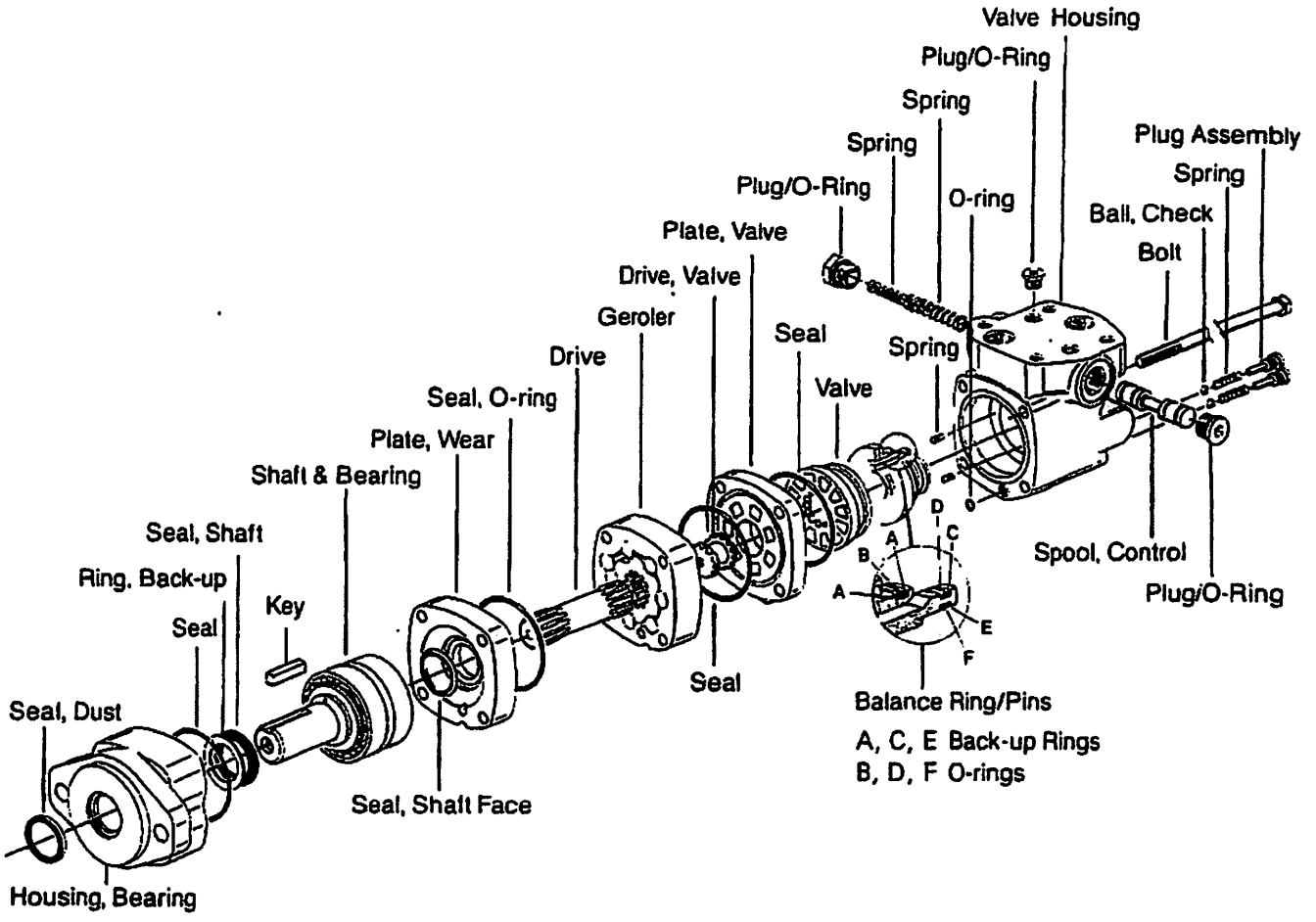

Tools required for disassembly and reassembly:

- Torque wrench 500 lb-in [60 Nm]* capacity
- 12 in. to 16 in. [300mm to 450mm] breaker bar
- 9/16 in. and 7/8 in. sockets
- Small blade screwdriver, 6 in. to 8 in. long [150mm to 200mm]
- 5/32 in. and 3/16 in. hex keys
- Press

Special tools:

- Small internal bearing puller, sliding hammer type
- Shaft seal installation tool, P/N 600496
- Bullet for 1 in. diameter shafts, P/N 600465

* Metric equivalents given in [brackets].

© Copyright 1989 Eaton Corporation

Disassembly

Cleanliness is extremely important when repairing hydraulic motors, so work in a clean area. Before disconnecting the oil lines clean the port areas of the motor thoroughly. After the oil lines have been disconnected plug the motor's ports to prevent dirt from entering. Use a wire brush to remove dirt and debris from the exterior of the motor. Check the key way and chamfered area of the output shaft; remove any nicks, burrs, or sharp edges that could damage the shaft seals during reassembly. Before beginning disassembly drain the oil from the motor.

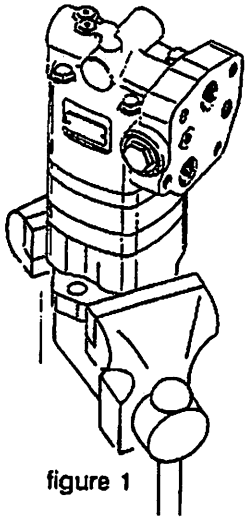

figure 1

1 Place the motor in a vise with the output shaft down. Clamp on the motor's mounting flange; not the bearing housing. Excessive clamping force will cause distortion. When clamping protect the mounting flange with soft vise jaws, hard rubber, or wood.

Note: Even though not all of the drawings show the motor in a vise, it is recommended that the motor be kept clamped in the vise during disassembly and reassembly.

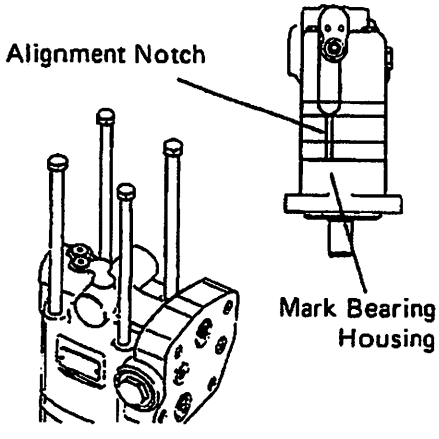

figure 2

2 Make a scribe mark on the bearing housing by the alignment notch so that the original alignment of the mounting flange and the port face can be retained when the motor is reassembled. Remove the 4 hex head bolts from the motor.

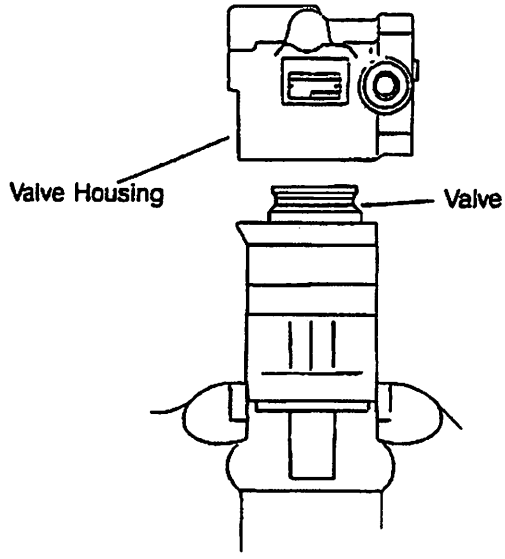

figure 3

3 Carefully lift the valve housing straight up. The balance ring should lift away with the valve housing. The valve will remain on the valve plate.

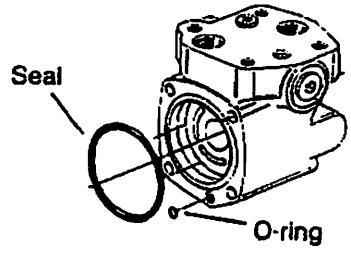

figure 4

4 Set the valve housing on a clean work bench. Be sure to protect its mating surfaces. Remove the 2 3/4 in. [70mm] seal and 3/8 in. [9,5mm] o-ring.

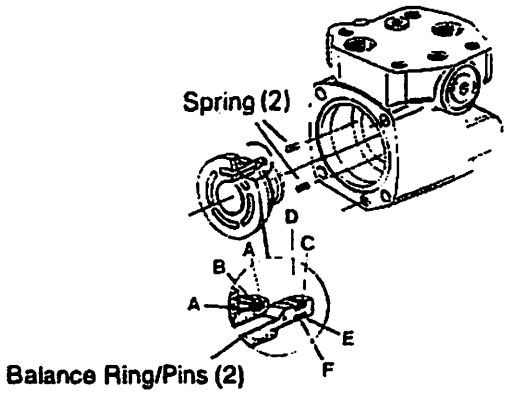

figure 5

5 Remove the balance ring and the 2 balance ring springs. The balance ring fits into the valve housing tightly; a sliding hammer bearing puller may be needed to loosen it.

6 Remove the o-rings and the back-up rings from the balance ring.

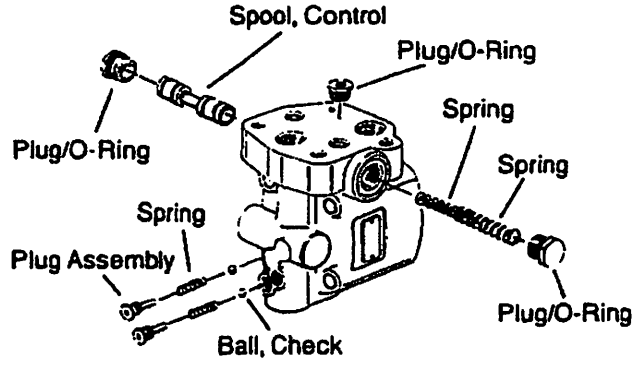

figure 6

7 Remove the 2 control spool plugs and o-rings. Use caution, the control spool springs are compressed under the plugs.

8 Remove the control spool and springs.

9 Remove the 2 check ball plugs and o-rings. Remove the 2 check balls and springs.

10 Remove the case drain plug and o-ring from the port face, see figure 6.

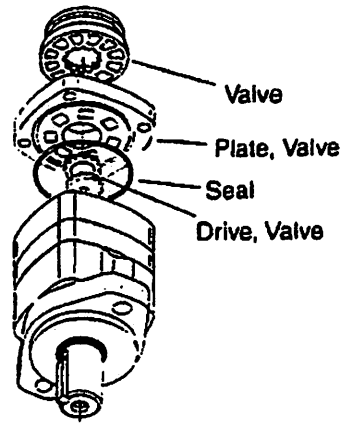

figure 7

11 Remove the valve.

12 Remove the valve plate.

13 Remove the 3 in. [76mm] seal from the valve plate.

14 Remove the valve drive, see figure 7.

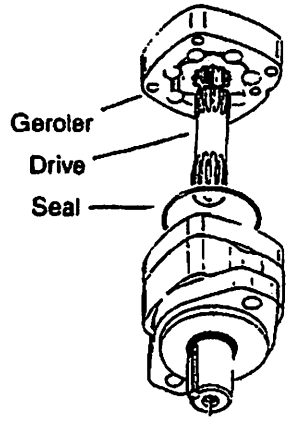

figure 8

15 Remove the Geroler assembly. Be sure to keep the Geroler star and rollers within the outer ring if they are loose.

16 Remove the drive.

17 Remove the 3 in. [76mm] seal from the wear plate, see figure 8.

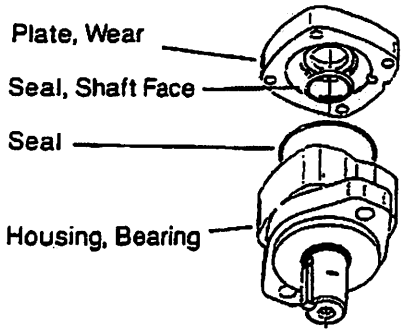

figure 9

18 Remove the wear plate.

19 Remove the shaft face seal from the wear plate.

20 Remove the 3 in. [76mm] seal from the bearing housing, see figure 9.

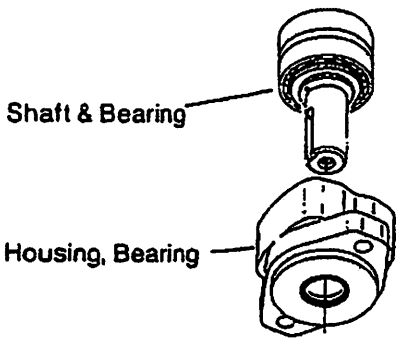

figure 10

21 Press the shaft and bearing assembly from the bearing housing.

Note: Individual parts of the shaft and bearing assembly are not sold. If the shaft or bearings are damaged replace the complete assembly.

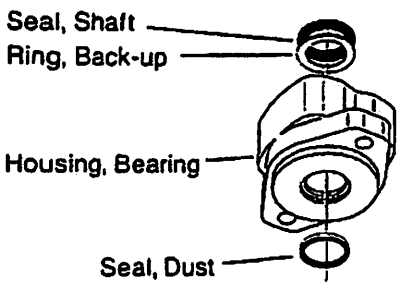

figure 11

22 Use a small blade screwdriver to pry the shaft seal, back-up washer, and dust seal from the bearing housing. Be careful, do not to damage the seal seats.

Reassembly

Check all mating surfaces. Replace any parts with scratches or burrs that could cause leakage. Wash all the metal parts in clean solvent. Blow them dry with pressurize air. Do not wipe the parts dry with paper towels or cloth. Lint in a hydraulic system will cause damage. Check the key way and chamfered area of the output shaft; remove any nicks, burrs, or sharp edges that could damage the shaft seals during reassembly.

Note: Always use new seals when reassembling hydraulic motors. Refer to parts list 6-129 for seal kit part numbers, replacement parts, and ordering information.

Important: During reassembly lubricate the new seals with a petroleum jelly like Vaseline. Also lubricate all machined surfaces and bearings with clean hydraulic fluid.

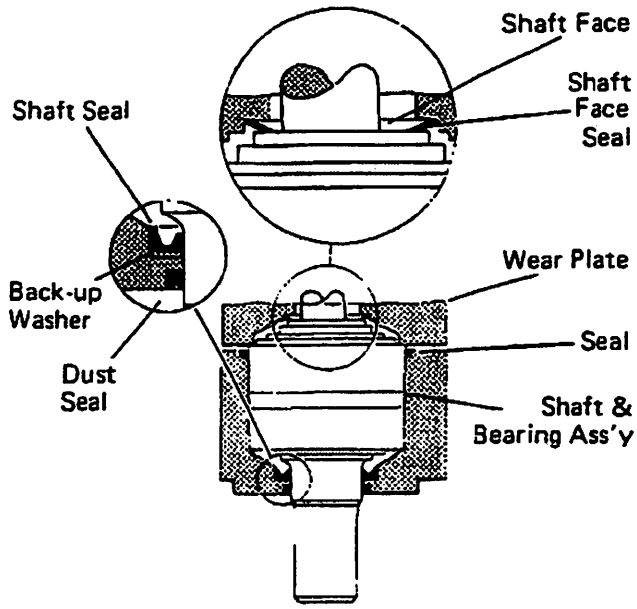

figure 12

23 Press the dust seal into the outer bore of the bearing housing. The lip of this seal must face outward, see figure 12. Be sure the dust seal is inserted straight and is undamaged.

24 Place the back-up washer into the inner bore of the bearing housing. Press the shaft seal into the inner bore over the back-up washer. Use the shaft seal installation tool, P/N 600496.

25 Before pressing the shaft and bearing assembly into the bearing housing lubricate the inner edge of the dust and shaft seals with petroleum jelly. Be careful not to damage the seals when installing the shaft. A protective bullet, P/N 600465, will help accomplish this step.

26 Re-clamp the bearing housing in a vise as shown in figure 1.

27 Pour a small amount of clean hydraulic fluid into the bearing housing and output shaft.

28 Apply petroleum jelly to the 3 in. [76mm] seal and install it in the groove in the bearing housing.

29 Install the shaft face seal in the wear plate as shown in figure 12.

30 Install the wear plate, see figure 12. Be sure to align the notch in the wear plate with the scribe mark on the bearing housing.

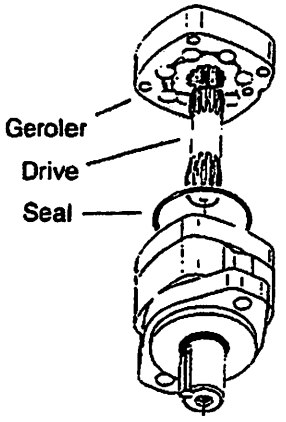

figure 13

31 Apply petroleum jelly to the 3 in. [76mm] seal and install it in the groove in the wear plate.

32 Insert the drive into the bearing housing.

Note: On smaller displacement motors the splined ends of the drive will be different lengths. If this is the case the longer splines go into the bearing housing.

33 Install the Geroler assembly on the wear plate. Be sure the notches are aligned and the star and rollers are in place, see figure 13.

Motor Timing Timing the hydraulic motor involves 3 steps. The direction the output shaft rotates is determined by timing.

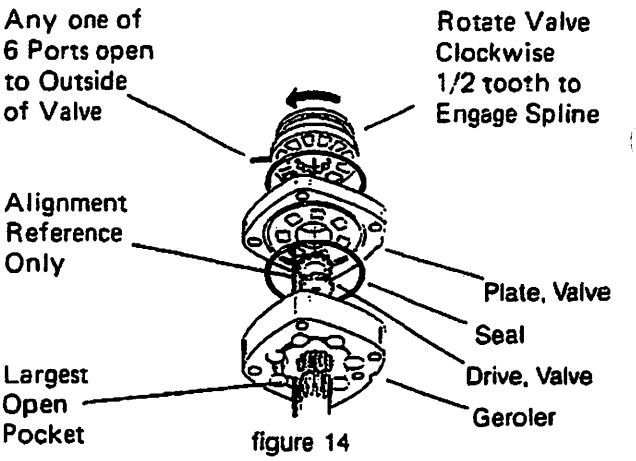

figure 14

Timing Step # 1 Locate the largest open pocket in the Geroler and mark its position.

34 Install the valve drive.

35 Apply petroleum jelly to the 3 in. [76mm] seal and install it in the groove in the valve plate.

36 Install the valve plate on the Geroler. Be sure the notches are aligned.

Timing Step # 2 Locate the open slot in the valve plate that is in line with the largest open pocket in the Geroler.

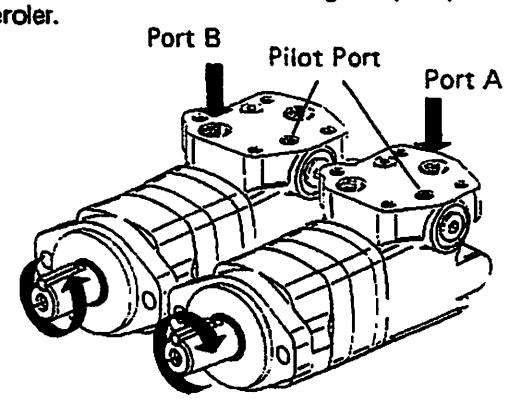

figure 15

Timing Step # 3 Align any one of the side openings in the valve with the open slot in the valve plate that is over the largest open pocket in the Geroler. Engage the valve with the valve drive by rotating it clockwise until the spline teeth mesh (1/2 spline tooth). This will provide the standard rotation when pressurized, see figure 15.

To reverse rotation engage the valve with the valve drive by rotating it counter clockwise until the spline teeth mesh (1/2 spline tooth).

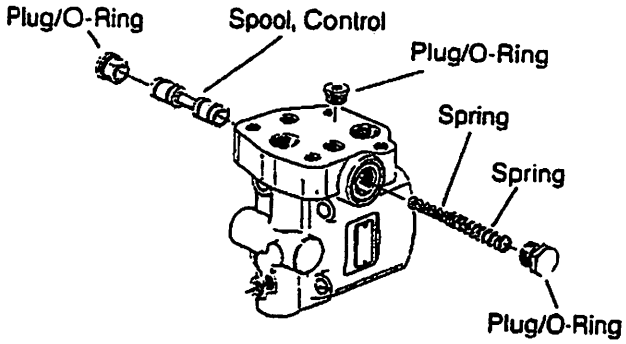

figure 16

37 Install the case drain plug in the port face. Use a new o-ring and tighten the plug to 40 to 60 lb-in [4,5 to 6,8 Nm].

38 Install the control spool and springs.

39 Install the control spool plugs with new o-rings. The springs will need to be compressed to install the second plug, see figure 16.

40 Tighten the control spool plugs to 450 to 550 lb-in [51 to 62 Nm].

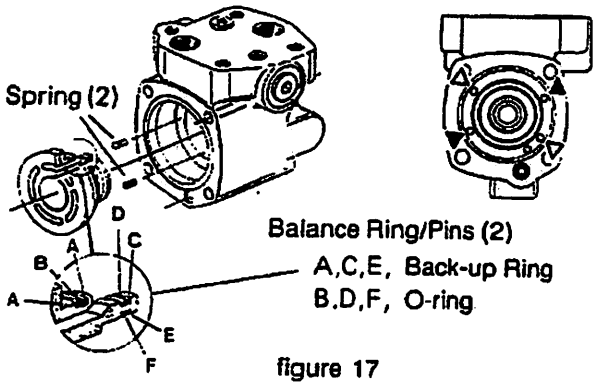

figure 17

41 Install the o-rings and back-up rings on the balance ring. Install the o-rings first then the back-up rings.

42 The larger o-ring has 2 back-up rings; 1 on each side. The 2 smaller o-rings each have 1 back-up ring. The 2 smaller back-up rings are installed closest to the small end of the balance ring.

43 Insert the 2 balance ring springs into the holes in the valve housing. These springs may be installed in any 2 holes that are directly across from each other, see figure 17.

44 To aid the installation of the balance ring lubricate its o-rings and back-up rings with petroleum jelly. Install the balance ring by aligning the 2 index pins with the 2 remaining holes in the valve housing. Push the balance ring into the valve housing until it just touches the springs.

Important: Do not push the balance ring all the way down into the valve housing.

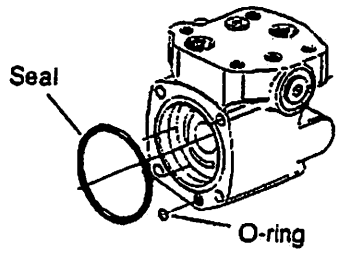

figure 18

45 Apply petroleum jelly to the 2 3/4 in. [70mm] seal and 3/8 in. [9,5mm] o-ring and install them in their valve housing grooves.

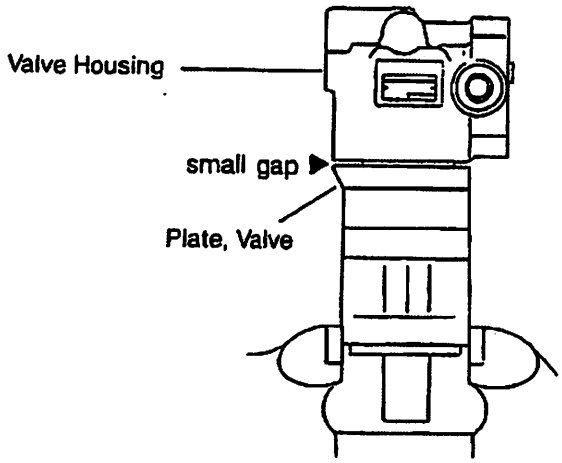

figure 19

46 Carefully install the valve housing on the valve plate. There should be a small gap between the valve housing and the valve plate. This gap will be closed when the hex head bolts are tightened.

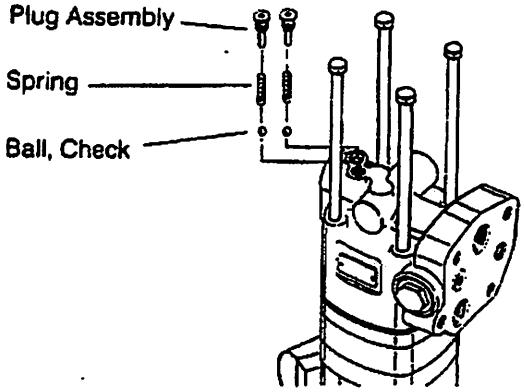

figure 20

47 Install the 4 hex head bolts and tighten them in a criss-cross pattern to 450 to 550 lb-in [51 to 62 Nm].

48 Install the 2 check balls and springs.

49 Install the 2 check ball plugs with new o-rings and tighten them to 40 to 60 lb-in [4,5 to 6,8 Nm].

CHAR-LYNN®
HYDRAULIC MOTOR
2000 SERIES – TWO SPEED
REPAIR INFORMATION
NO. 7-131

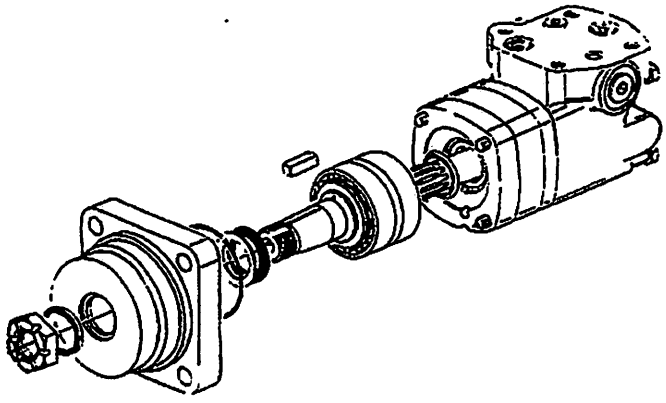

figure 21

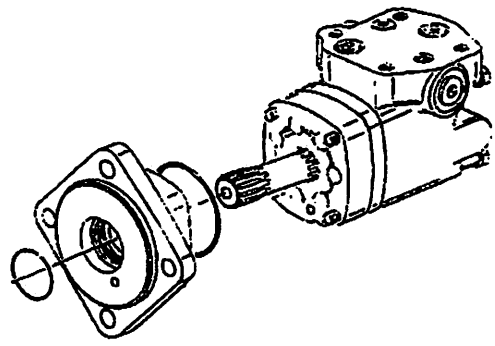

figure 22

Wheel Motor

On wheel motors a different bearing housing is used, see fig. 21. Other than this the parts are the same and the same disassembly and reassembly procedures apply.

Bearingless Motor

Bearingless motors are the same as standard motors without the shaft and bearing assembly. The mounting flange replaces the bearing housing and wear plate, see fig. 22. Follow the disassembly and reassembly procedure for the rear section of the standard motor.

HOW TO ORDER REPLACEMENT PARTS

EACH ORDER MUST INCLUDE THE FOLLOWING:

1. Product Number
2. Date Code
3. Part Name
4. Part Number
5. Quantity of Parts

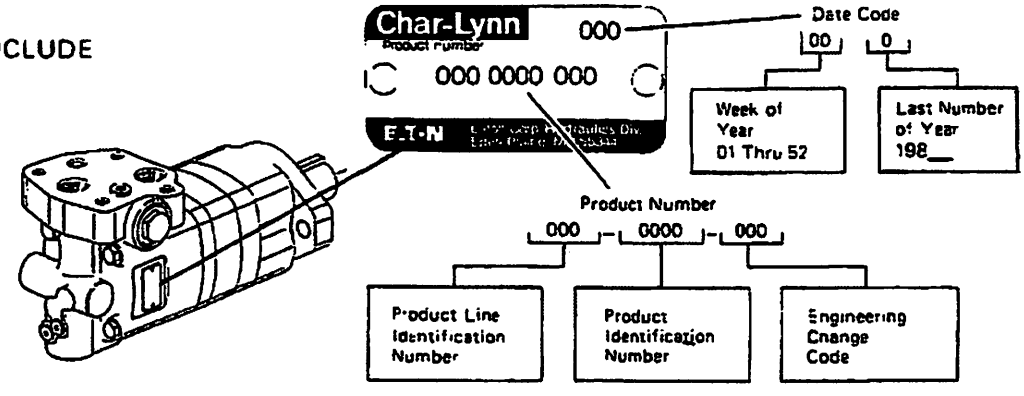

Eaton Corporation Hydraulics Division 15151 Highway 5 Eden Prairie, MN 55344 Telephone (612) 937-9800
Eaton G.m.b.H. Hydraulics Division ✉ 100 410 · D-5620 Velbert 1 West Germany ☎ (0 20 51) 20 70

EATON

FORM NO. 7-131-19

Printed in U.S.A.

CHAPTER 6

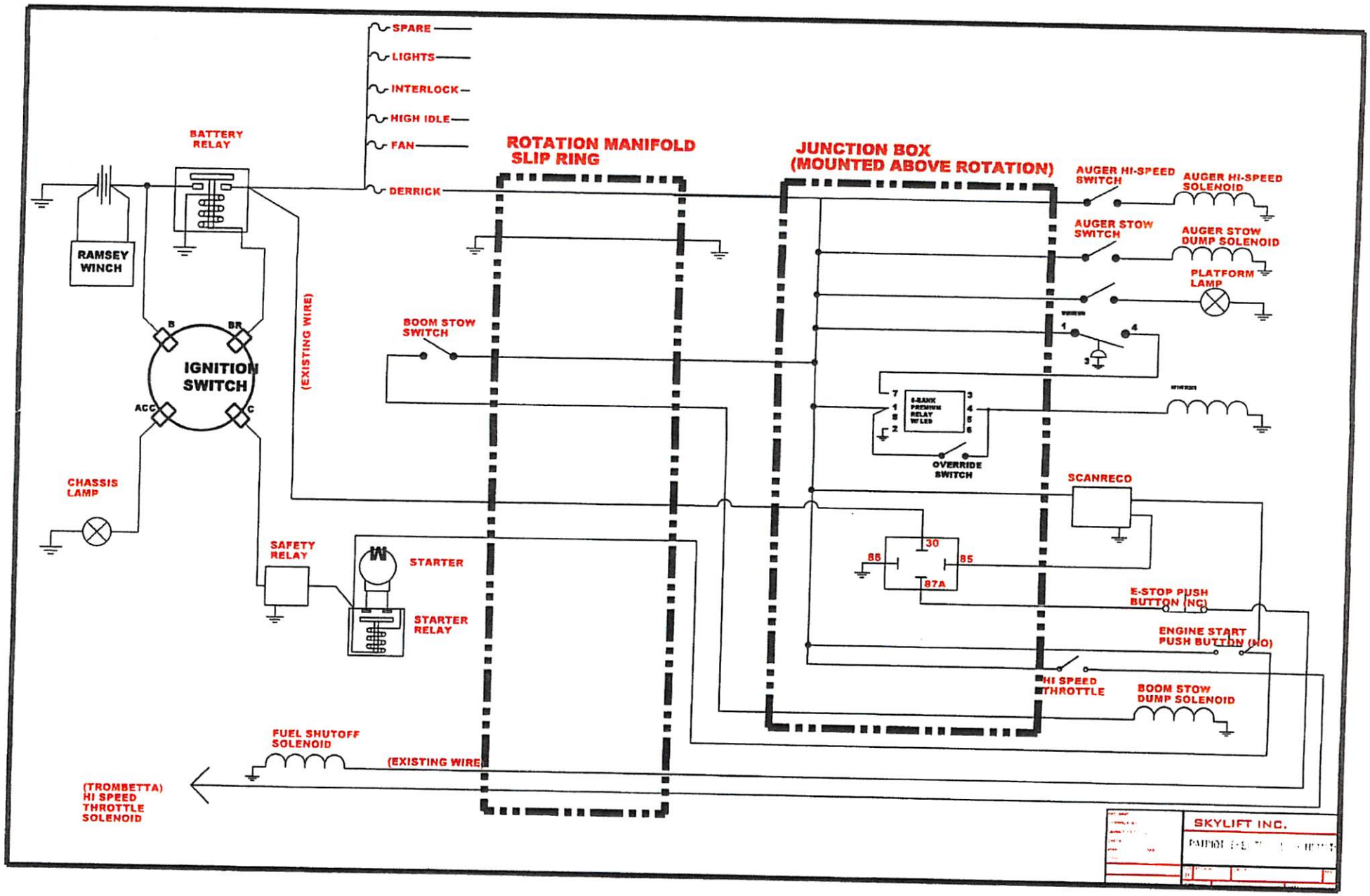
SPARE
LIGHTS
INTERLOCK
HIGH IDLE
FAN
DERRICK
BATTERY RELAY
RAMSEY WINCH
IGNITION SWITCH
B
BR
ACC
C
(EXISTING WIRE)
ROTATION MANIFOLD SLIP RING
JUNCTION BOX (MOUNTED ABOVE ROTATION)
AUGER HI-SPEED SWITCH
AUGER HI-SPEED SOLENOID
AUGER STOW SWITCH
AUGER STOW DUMP SOLENOID
PLATFORM LAMP
BOOM STOW SWITCH
OVERRIDE SWITCH
SCANRECO
CHASSIS LAMP
SAFETY RELAY
STARTER
STARTER RELAY
30
86
85
87A
E-STOP PUSH BUTTON (NC)
ENGINE START PUSH BUTTON (NO)
HI SPEED THROTTLE
BOOM STOW DUMP SOLENOID
FUEL SHUTOFF SOLENOID
(EXISTING WIRE)
(TROMBETTA) HI SPEED THROTTLE SOLENOID
SKYLIFT INC.

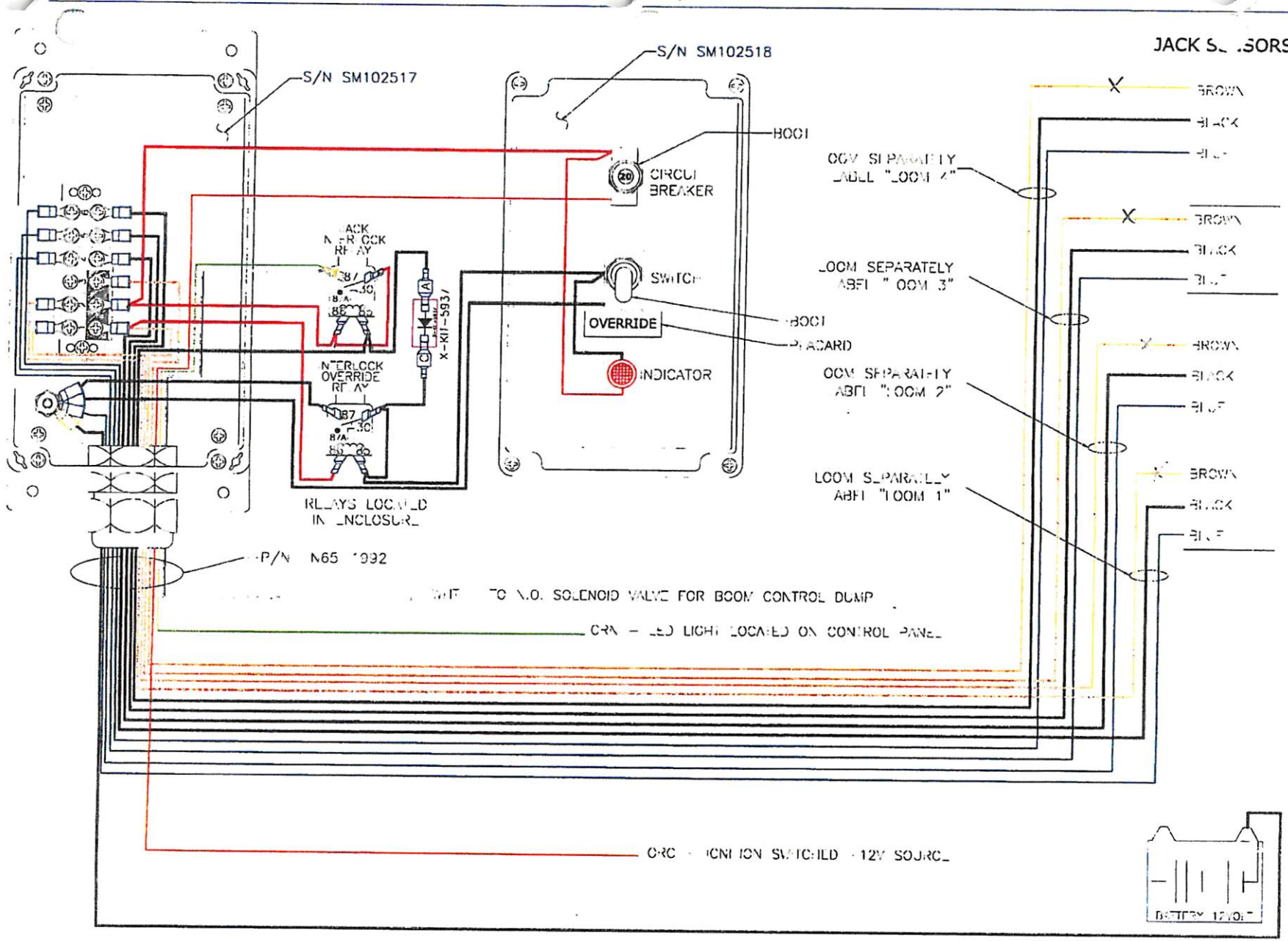

© 2013 WIRED RITE SYSTEMS INC.
THE INFORMATION CONTAINED IN THIS DRAWING IS THE PROPERTY OF WIRED RITE SYSTEMS, INC. AND IS THEREFORE CONFIDENTIAL. THIS INFORMATION MAY NOT BE COPIED NOR DISCLOSED TO OTHERS WITHOUT THE EXPRESS WRITTEN CONSENT OF WIRED RITE SYSTEMS INC.

DRAWN BY: Roger Abby	DATE: 11/12/2012	TITLE: INTERLOCK OVERRIDE WIRING DIAGRAM	
SALES ORDER: REFERENCE	DRAWING #: X SL 102515	REV: A	PIMS NO. X SL 102515
BUILDER: SKYLIFT		CUSTOMER: STOCK	

WR Wired Rite Systems Inc.
5793 SUITE A, SKYLAND BLVD., WINDSOR, CA 95492
PHONE:(707) 838-1122 FAX:(707) 838-1050

Owner's Manual

PowerVerter® Plus DC-to-AC Inverters

Input	Output
12 VDC	120V, 60 Hz. AC

*

TRIPP·LITE

1111 W. 35th Street, Chicago, IL 60609 USA
Customer Support: (773) 869-1234
www.tripplite.com

* Applies to models with "UL" in their model numbers.

Reliable AC Power Wherever You Need It!

Congratulations! You've purchased the most advanced, feature-rich Inverter designed as a mobile energy source for your vehicle. PowerVerter Inverters efficiently convert DC (battery) power into 120V AC (household) power, allowing you to use equipment you commonly use at home—appliances, entertainment systems, computers, power tools and more—while cruising the open road. PowerVerter ters, through a high-efficiency conversion process and a charge conservation setting, draw the highest level of performance from your batteries without overtaxing them, lengthening their service life. An automatic low battery shutdown feature ensures you'll always have ity of power for starting purposes.

- **Automatic Overload Protection**
- **Automatic "Battery-Saver" Low Voltage Shutdown**
- **High Efficiency DC-to-AC Inversion**
- **Multi-Function Lights & Switches**
- **Optional Remote Control Capability**
- **Frequency-Controlled Output**
- **Moisture-Resistant Construction***
- **Battery Charge Conserver (Load Sense)**

Contents

Safety	2	Battery Connection	7
Feature Identification	3	AC Output Connection	8 (back page)
Operation	4	Troubleshooting/Service/ Maintenance/Warranty	8 (back page)
Application Guide	5	Warranty Registration	8 (back page)
Mounting	6		

ı itory Compliance Identification Numbers

For the purpose of regulatory compliance certifications and identification, your Tripp Lite product has been assigned a unique series number. The series number can be found on the product nameplate label, along with all required approval markings and information. When requesting compliance information for this product, always refer to the series number. The series number should not be confused with the marking name or model number of the product.

Copyright © 2005. PowerVerter® is a registered trademark of Tripp Lite. All rights reserved.

** Inverters are moisture-resistant, not waterproof.*

Mounting *optional*

WARNING! If you choose to mount your Inverter, mount it and wire its DC input BEFORE DC battery connection. Failure to follow these instructions may lead to personal injury and/or damage to the Inverter and connected systems.

Tripp Lite Inverters are designed for horizontal mounting in a variety of vehicular or non-vehicular applications. User must supply mounting hardware and is responsible for determining if the hardware and mounting surface are suitable to support the weight of the Inverter. Contact Tripp Lite if you require further assistance in mounting your Inverter.

Vehicular and Non-Vehicular Horizontal Mount

A Using the measurements from the diagram, install two user-supplied ¼" (6 mm) fasteners into a rigid horizontal surface, leaving the heads slightly raised. B Slide the Inverter/Charger back over the fasteners to engage the mounting slots molded on the bottom of the Inverter/Charger cabinet. C Install and tighten two user-supplied ¼" (6 mm) fasteners into the mounting feet molded on the front of the Inverter/Charger cabinet.

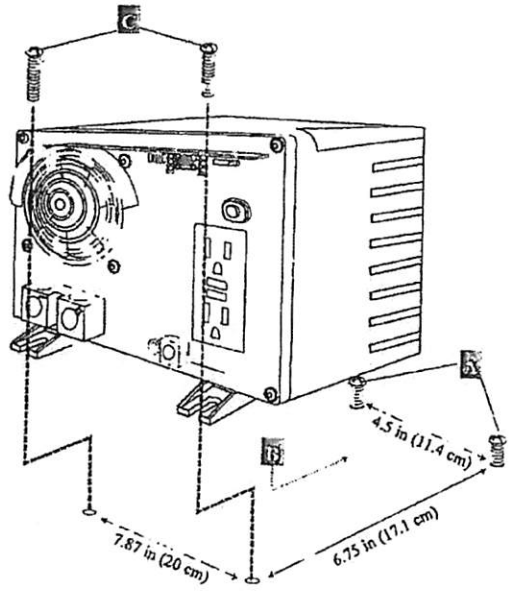

Battery Connection

Connect your Inverter to your batteries using the following procedures—always loosely twist each pair of cables together before connecting them separately to the appropriate DC terminal on the Inverter (positive or negative).

• **Connect DC Wiring:**

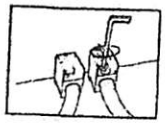

You must run positive cable(s) through user-supplied UL-listed fuse(s) and fuse block(s) of the proper size.

See Specifications page for Minimum Recommended Cable Sizing Chart. An excellent source of cables is battery jumper cables. Output performance will decrease if you use only one jumper cable.

Although your Inverter is a high-efficiency converter of electricity, its rated output capacity is limited by the length and gauge of the cabling running from the battery to the unit. Use the shortest length and largest diameter cabling (maximum 00 gauge) to fit your Inverter's DC Input terminals. Shorter and heavier gauge cabling reduces DC voltage drop and allows for maximum transfer of current. Your Inverter is capable of delivering peak wattage at up to 200% of its rated continuous wattage output instantaneously. See Specifications page for details. Heavier gauge cabling should be used when continuously operating heavy draw equipment under these conditions. Tighten your Inverter and battery terminals to approximately 3.5 Newton-meters (2.58 foot lbs.) of torque to create an efficient connection and to prevent excessive heating at this connection. Insufficient tightening of the terminals could void your warranty.

• **Connect Ground:** Using a #8 AWG wire or larger, directly connect the Main Ground Lug to the vehicle's chassis ground or earth ground. See Feature Identification section to locate Main Ground Lug. All installations must comply with national and local codes and ordinances.

• **Connect Fuse:** In addition to the protection provided by the Inverter's internal fuses, NEC article 551 requires that you connect your Inverter's positive DC Terminal(s) directly to a UL-listed fuse(s) and fuse block(s) within 18 inches of the battery. See diagrams below for proper fuse placement.

WARNING! Never attempt to operate your Inverter by connecting it directly to output from an alternator rather than a battery or battery bank.

CAUTION! Observe proper polarity with all DC connections.

Vehicular

Your Inverter's Nominal DC Input Voltage **must match** the voltage of your battery or batteries—12 Volts in most vehicular applications. It is possible to connect your Inverter to the main battery within your vehicle's electrical system. In many vehicular contexts, the Inverter will be connected to one or more dedicated auxiliary (house) batteries which are isolated from the drive system to prevent possible draining of the main battery.

1. 12 Volt Alternator
2. Vehicle Battery Ground
3. 12 Volt Main Battery
4. 12 Volt Auxiliary (House) Battery
5. UL-Listed Fuses & Fuse Blocks (mounted within 18 inches of the battery)
6. Battery Isolator
7. Large Diameter Cabling, Maximum 00 Gauge to Fit Terminals
8. 8 AWG (minimum) Ground Wire to Vehicle Frame or Earth Ground

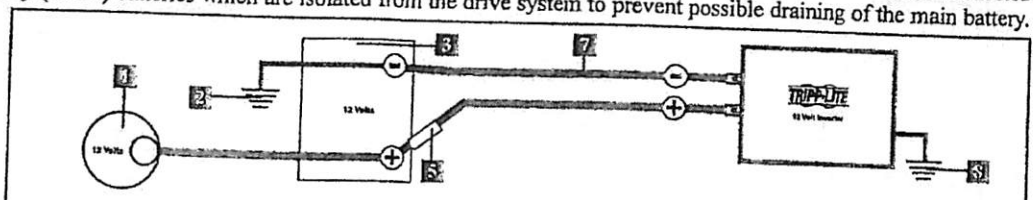

12 Volt Main Battery Connection—two DC terminals

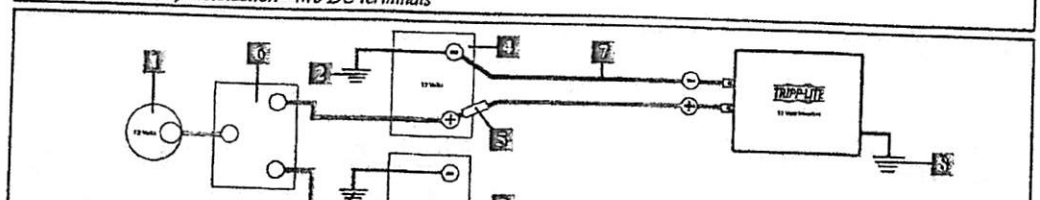

12 Volt Main and Auxiliary (House) Battery Connection (Isolated Parallel)—two DC terminals

AC Output Connection

To avoid overloading your Inverter, be sure to match the power requirements of the equipment you plan to run at any one time (add their total watts) with the output wattage capacity of your Inverter model (see Specifications). When figuring the power requirements of your equipment, do not confuse "continuous" wattage with "peak" wattage ratings. Most electric motors require extra power at start-up ("peak wattage) than required to run continuously after start-up, sometimes over 100% more. Some motors, such as in refrigerators and pumps, start and stop intermittently according to demand, requiring "peak" wattage at multiple, unpredictable times during operation.

- **DoubleBoost™ Feature**

  Tripp Lite Inverters deliver up to twice their nameplate rated wattage for up to 10 seconds,* providing the extra power needed to cold start heavy-duty tools and equipment.

- **OverPower™ Feature**

  Tripp Lite Inverters deliver up to 150% of their name plate rated wattage for up to 1 hour,* providing plenty of reserve power to reliably support tools and equipment longer.

** Actual duration depends on battery age, battery charge level and ambient temperature.*

Troubleshooting

Try these remedies for common Inverter problems before calling for assistance. Call Tripp Lite Customer Service at (773) 869-1234 before returning your unit for service.

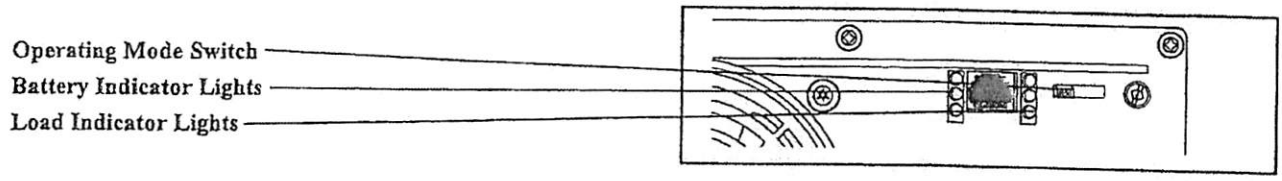

SYMPTOM	PROBLEMS	CORRECTIONS
No AC Output (All Indicator Lights Are OFF)	Operating Mode Switch is set to "OFF."	Set Operating Mode Switch to "ON/REMOTE."
	User-supplied UL-listed external DC input fuses have blown.	Replace fuses.
Red Battery Indicator Light Is Rapidly Flashing (¼ Second Flashes)	Unit has shut down due to excessive battery discharge.	Run your engine to raise battery voltage. Check external battery connections and fuse. Reset by moving Operating Mode Switch to "OFF." Wait one minute and switch to "ON/REMOTE." If unit remains in shutdown mode after several attempts to reset contact Tripp Lite Customer Service for assistance.
Red Load Indicator Light 's Rapidly Flashing ¼ Second Flashes)	Unit has shut down due to overload.	Reduce load. Reset by moving Operating Mode Switch to "OFF." Wait one minute and switch to "ON/REMOTE." If unit remains in shutdown mode after several attempts to reset contact Tripp Lite Customer Service for assistance.
Connected Equipment Experiences Buzzing Sound Or Picture Distortion	Audio/Video interference.	Reposition equipment antennas and Inverter.
Inverter Output Seems Intermittent	Loose cable connections.	Check and secure all connections.

Service

If you are returning your Inverter to Tripp Lite, please pack it carefully, using the ORIGINAL PACKING MATERIAL that came with the unit. Enclose a letter describing the symptoms of the problem. If the Inverter is within the warranty period, enclose a copy of your sales receipt. To obtain service you must obtain a Returned Material Authorization (RMA) number from Tripp Lite or an authorized Tripp Lite service center.

Maintenance

Your Inverter requires no maintenance and contains no user-serviceable or replaceable parts, but should be kept dry at all times. Periodically check, clean and tighten all cable connections, as necessary, both at the unit and at the battery.

Limited Warranty

Tripp Lite warrants its Inverters to be free from defects in materials and workmanship for a period of one year (domestic) or 120 days (export) from the date of retail purchase by end user.

Tripp Lite's obligation under this warranty is limited to repairing or replacing (at its sole option) any such defective products. To obtain service under this warranty you must obtain a Returned Material Authorization (RMA) number from Tripp Lite or an authorized Tripp Lite service center. Products must be returned to Tripp Lite or an authorized Tripp Lite service center with transportation charges prepaid and must be accompanied by a brief description of the problem encountered and proof of date and place of purchase. This warranty does not apply to equipment which has been damaged by accident, negligence or misapplication or has been altered or modified in any way, including opening of the unit's casing for any reason. This warranty applies only to the original purchaser who must have properly registered the product within 10 days of retail purchase.

EXCEPT AS PROVIDED HEREIN, TRIPP LITE MAKES NO WARRANTIES, EXPRESS OR IMPLIED, INCLUDING WARRANTIES OF MERCHANTABILITY AND FITNESS FOR A PARTICULAR PURPOSE. Some states do not permit limitation or exclusion of implied warranties; therefore, the aforesaid limitation(s) or exclusion(s) may not apply to the purchaser.

EXCEPT AS PROVIDED ABOVE, IN NO EVENT WILL TRIPP LITE BE LIABLE FOR DIRECT, INDIRECT, SPECIAL, INCIDENTAL OR CONSEQUENTIAL DAMAGES ARISING OUT OF THE USE OF THIS PRODUCT, EVEN IF ADVISED OF THE POSSIBILITY OF SUCH DAMAGE. Specifically, Tripp Lite is not liable for any costs, such as lost profits or revenue, loss of equipment, loss of use of equipment, loss of software, loss of data, costs of substitutes, claims by third parties, or otherwise.

Tripp Lite has a policy of continuous improvement. Specifications are subject to change without notice.

Warranty Registration

Visit www.tripplite.com/warranty to register the warranty of your new Tripp Lite product. You'll be automatically entered into a drawing for a chance to win a FREE Tripp Lite product!*

** No purchase necessary. Void where prohibited. Some restrictions apply. See website for details.*

This product designed and engineered in the USA.

200501058 93-2425

Specifications

MODEL NUMBER:	PV750UL	PV750FC	PV1250UL	PV1250FC
Input Volts (Nominal):	12 VDC	12 VDC	12 VDC	12 VDC
DC Input Voltage Range:	10 - 15 VDC	10 - 15 VDC	10 - 15 VDC	10 - 15 VDC
DC Input Connection:	User-Supplied Cables	User-Supplied Cables	User-Supplied Cables	User-Supplied Cables
Output Volts (Nominal):	120 VAC, ± 5%	120 VAC, ± 5%	120 VAC, ± 5%	120 VAC, ± 5%
Output Frequency (Nominal):	60 Hz, ± 0.5%	60 Hz, ± 0.5%	60 Hz, ± 0.5%	60 Hz, ± 0.5%
Output Waveform:	Modified Sine Wave	Modified Sine Wave	Modified Sine Wave	Modified Sine Wave
Efficiency:	Up to 94%, depending on load and temperature	Up to 94%, depending on load and temperature	Up to 94%, depending on load and temperature	Up to 94%, depending on load and temperature
Continuous Power (@ 20 C):	750 W	750 W	1250 W	1250 W
OverPower™ Peak Surge Power:*	1125 W	1125 W	1875 W	1875 W
Double Boost™ Peak Surge Power:*	1500 W	1500 W	2500 W	2500 W
DC Fuse Rating (UL Recognized):	200 Amp	200 Amp	200 Amp	200 Amp

** OverPower duration (up to 1 hour). DoubleBoost duration (up to 10 seconds). Actual duration depends on battery age, battery charge level and ambient temperature. The policy of Tripp Lite is one of continuous improvement. Specifications are subject to change without notice.*

This product designed and engineered in the USA.

Minimum Recommended Cable Sizing Chart†

Always loosely twist each pair of cables together before connecting them separately to the appropriate DC terminal on the Inverter (positive or negative). Use in conjunction with DC wiring connection instructions in the Battery Connection section.

	Wire Gauge				
	2 Conductors				
Watts	6	4	2	0	00
500	15 ft	25 ft	39 ft	62 ft	79 ft
700	11 ft	18 ft	28 ft	44 ft	56 ft
1000	N/R	12 ft	20 ft	31 ft	39 ft
2000	N/R	N/R	N/R	16 ft	20 ft
2400	N/R	N/R	N/R	13 ft	16 ft

† N/R = Not Recommended. NOTE: Acceptable power is directly related to cable length (i.e. - the shorter the cable, the better the performance)

* Only applies to models with "UL" in their model numbers.

Regulatory Compliance Identification Numbers

For the purpose of regulatory compliance certifications and identification, your Tripp Lite product has been assigned a unique series number. The series number can be found on the product nameplate label, along with all required approval markings and information. When requesting compliance information for this product, always refer to the series number. The series number should not be confused with the marking name or model number of the product.

Tripp Lite Inverters include a Battery Charge Conserver (Load Sense) Control which saves battery power by allowing users to set the minimum load level at which the unit's inverter turns on. Users can significantly reduce the No Load DC Input Current to a very low amperage power level with the use of this control.

TRIPP·LITE

1111 W. 35th Street • Chicago, IL 60609 USA
Customer Support: 773.869.1234 • www.tripplite.com

asahydraulik.com

Tel.: 908-541-1500 or 800-473-9400
Fax: 908-541-1550

sales_US@asahydraulik.com
www.asahydraulik.com

asa Hydraulik of America
160 Meister Ave #20A
Branchburg, NJ 08876

Assembly, installation and operating instructions

1) Introduction

The instruction refers to asa oil air coolers and will help you with installation, operation and maintenance and the requested information to it. This document must be read carefully before installation and retained. The following details and warnings must be observed:

ATTENTION refers to a possible accident that could occur, if the instruction has not been followed. The accident can cause injuries!	**WARNING** indicates a possible accident can happen if this requirement is not respected. This accident can lead to lasting injury or even death!	**DANGER** indicates a possible accident will happen if this requirement is not respected. This accident can lead to lasting injury or even death!

ATTENTION The described oil air coolers are to be used in industrial/commercial applications. The user of the system must take care that the oil air coolers must be visibly marked with the following warnings: electric voltage, hot surfaces, rotating parts and noise level.

If labels and marks from the manufacturer become removed or unrecognizable, then all claims regarding warranty are invalid. The customer has to take care of the traceability when the label has been changed! The manufacturer's type label cannot be changed or removed!
The use of this document should be by a skilled and qualified user. Any operating personnel must be instructed according the installation manual. The manufacturer reserves the right for technical improvements and changes without any prior notification.
The customer has to take care that the product is used according to the instructions. In any case of doubt, e.g. in mobile applications and risk of vibrations, the customer has the possibility to ask a technician from *asa hydraulik* for advice. Changes to the product or the attached electric / electronic parts invalidates the warranty. *asa hydraulik* is not liable for consequential damages caused by unauthorized changes or reparations by the customer. Please contact us in any case of failure.
The installation instructions must be available at any time and attached to the complete machine until the installation. Both documents are part of the product.

2) General

a) Mounting

ATTENTION For mounting DC driven oil air coolers you can use the brackets on each side or the T slots on the header tanks. For horizontal mounting *asa hydraulik* has to be consulted. Please be aware that especially at mobile applications additional vibration dampers or brackets may have to be installed. Please contact *asa hydraulik* at such applications.

For mounting AC or hydraulic drive oil air coolers use the side frames. Mounting the oil air cooler on only one bracket is not possible. Dependent on the type of system and its application *asa hydraulik* recommends an additional fixing, if necessary to avoid overstressing on the brackets or T slots.

b) Conventional use

asa oil air coolers are designed for cooling mineral hydraulic oil in industrial applications with ambient air. The data given in catalogues or on the website (www.asahydraulik.com) have to be followed strictly.

c) Non conventional use

All other applications that are different or not listed in the "conventional use" have to be categorized as "non conventional use".

WARNING asa oil air coolers cannot be used in explosion proof areas, unless the cooler has an adequate certification (ATEX).

DANGER Disregarding the warnings in this chapter can cause life danger and damages in the system!

3) Installation

a) Place of installation

WARNING The place of installation should be chosen, where the cooling function is not adversely affected and especially where persons are not in the air draft or noise. Please ensure that the cooling air can flow in and out freely, also try to avoid recirculation of heated air (see picture below).

b) Installation in closed rooms

Sufficient air ventilation must be available in closed rooms to avoid an increase of the room temperature through heated air from the equipment. In case of doubt, ventilation between the oil air cooler and the outside air should be assured by installing ventilation ducts, whose size must correspond at least to the frontal area of the cooler.

c) Installation in open air

Mounting in the outside is considered advantageous in cooling systems with high cooling performance. Please note that electric motors must be protected against climatic influences. Low outside temperatures reduces the oil temperature, start up as viscosity increases. For this reason, pressure peaks are generated at the start up of the system can exceed the allowed maximum.

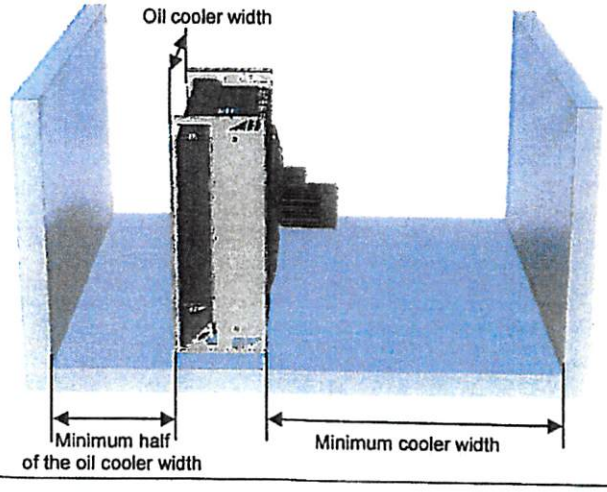

ATTENTION To protect the system a bypass valve should be used, which is controlled by a pressure valve, whose adjustment should not exceed the maximum pressure of the oil air cooler. This could also be connected with an external bypass, or additional oil heating can be used with constant oil circulation.

d) Cooling air

Mounting in very contaminated environmental air (dust, oil mist, etc.) leads to dirt accumulation on the cooling surfaces and therefore reduces cooling performance. In this case frequent cleaning must be provided. If the temperatures of -4°F and 104°F respectively are exceeded *asa hydraulik* shall be consulted.

e) oil

Please ensure the cleanliness and the quality of the oil. Standard specifications for hydraulic circuits are sufficient for asa oil air coolers. The maximum oil inlet temperature is 248°F if not mentioned different in the data sheet of the cooler.

4) Assembly

asa oil air coolers are normally installed in the return flow of the oil circulation system. Please ensure that there is no valve installed between the oil air cooler and the tank, since a closure of the valve would lead to immediate over pressure of the cooler. Other installations (separate cooling circulation, drain oil circulation) are possible. Oil lines should be connected with the oil air cooler without tension or vibration, especially with mobile applications the transmission of vibrations must be reduced through mounting on rubber bounded metal and connection using elastic hoses.

The specified maximum pressures refer to static pressures, which are not affected by fluctuations. Pressure peaks can appear (caused by intermittent oil flow from cylinders, control valves, etc.), which only are detectable with an oscillograph (gauges are too slow in reaction). These quick pressure peaks and pressure vibrations are not reduced through spring loaded pressure control valves. The safest way to avoid damage through pressure peaks is the separation of working circulation and cooling circulation. An additional pump is necessary, which carries the oil from the tank to the oil air cooler and back to the tank.

INTERLOCK OVERIDE

Part# ELE-181

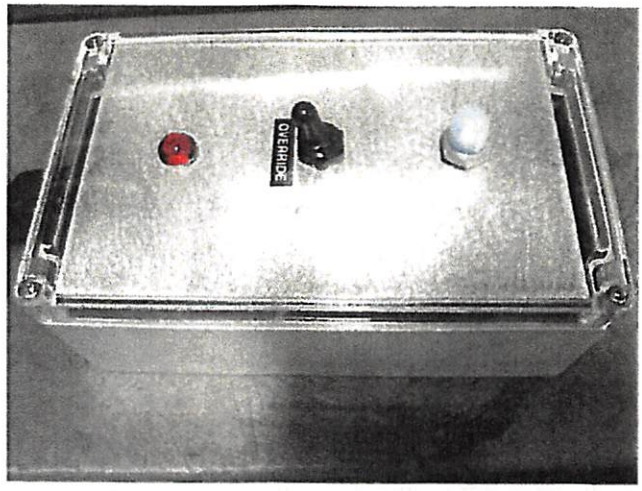

FOR MOMENTARY USE TO OVERIDE THE OUTRIGGER INTERLOCK SYSTEM.

!WARNING!

INTERLOCK OVERIDE IS FOR MOMENTARY USE ONLY, AND IS NOT INTENDED FOR OPERATIONAL USE.

Plunger limit switch for auger stow bracket

Much slimmer than our other limit switches, you can also stack them together. Switches are IP67 and NEMA 4 and 13 rated for washdowns and oil protection. They switch one circuit from off to on or on to off (SPDT) and spring back (momentary). Housing is die cast aluminum with two counterbore 0.20" dia. mounting holes (fasteners not included). Switches are UL listed and CSA certified.

Switches with sealed plunger protect the plunger from water and dirt.

Switches with cable have a 9.8-ft., 18/4 AWG oil-resistant (SJTO cable.

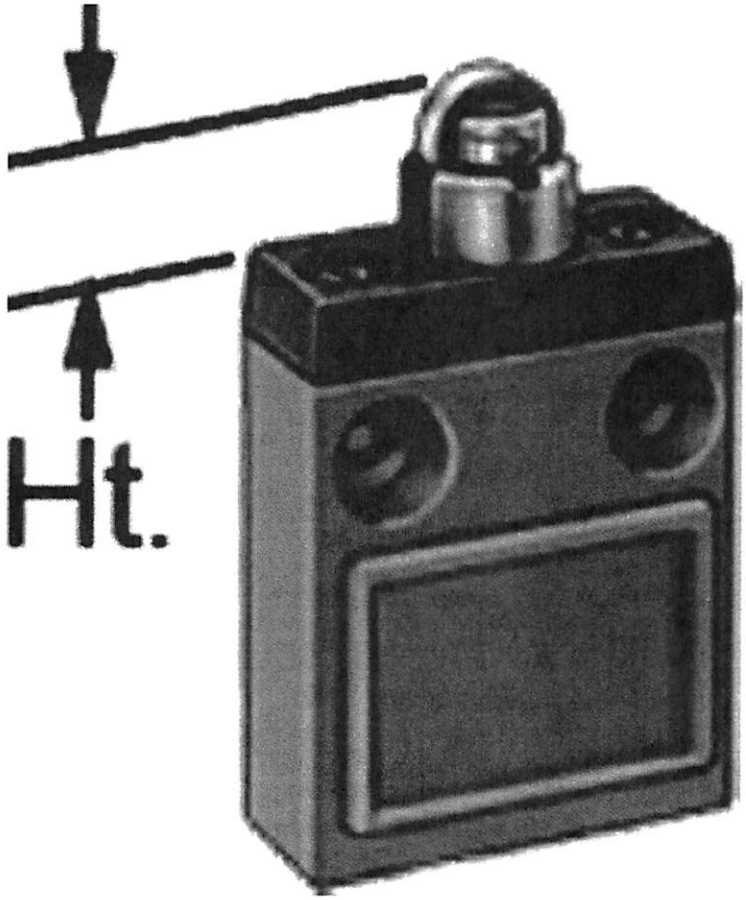

Trombetta
MOTION TECHNOLOGIES
Strokes of Genius.

Instruction Sheet for P613-K (12 or 24 VDC)

Parts List- Description

Cable Pivot

Wire Core

Cable Bulkhead Fitting

Cable Bracket

Cable Assembly

Jam Nut UNF 3/8-24

Aluminum Adjustment Nut 1.00 Inch Hex

* Control Module (5500-A60)

*** Only sold with kits – K1, K2, K5, K6, K9**

Control Module 5500-A60 Product Specifications

Voltage Nominal	12 Volts	24 Volts
Voltage Input Min. Max. Range:	8.5-32 (See Note 1)	8.5-32 (See Note 1)
Max Load Current:	80	40
Max Power Load:	1000 Watts	1000 Watts
Recycle Time:	.25 Sec. (See Note 3)	.25 Sec. (See Note 3)
Auxiliary Input current requirement:	Less than 50 milliamp	Less than 50 milliamp
Operating Ambient Temp:	-30°C + 80°C	-30°C + 80°C
Actuation Time:	.5 Sec.	.55ec.
Transient Voltage Protection:	Integral 5000 Watt Peak Pulse Power TVS	
Insertion Loss::	1.0 volt w/75 Amp Load 0.69 Volt w/50Amp load	
Maximum Cycle Rate:	6 Cycles/Minute for 1 minute max. duration (See Note 2)	
Reverse Polarity Protection:	Withstands brief reverse polarity of battery inputs if properly fused.	

Notes:

1. Minimum voltage required to assure full pull-in time is achieved.
2. Maximum cycle rates specification is provided as a figure of merit only. It is intended to provide some idea of what the module can withstand in a burst of rapid cycling with short time intervals will result in damage to the solenoid or module.
3. Minimum time voltage must be removed from the Aux input in order for the pull in timer to reset for full 0.5 second pull in.

****** Consult Trombetta if high vibration is anticipated******

No implied warranty is intended. All information is subject to change without notice.

Trombetta
MOTION TECHNOLOGIES
Strokes of Genius.

Instruction Sheet for P613-K (12 or 24 VDC)

Installing Your Throttle Control Kit:

Location

- Mount the industrial work solenoid off the engine but within 46 inches (116.8 cm) of the throttle lever, to avoid engine vibration and high temperature components (more than 257°F [125°C]).
- Mount Control Module (S500-A60) out of the engine compartment if possible. If not possible, mount the module as far away from high temperature components as possible. Maximum temperature range is 185F (85°C).
- Route the flexible cable away from high temperature (220°F [105°C]) components such as exhaust manifolds.
- Avoid sharp bends in flexible cable. Bends should form a smooth arc (360 maximum) with a radius of 5 inches (12.7 cm) minimum.

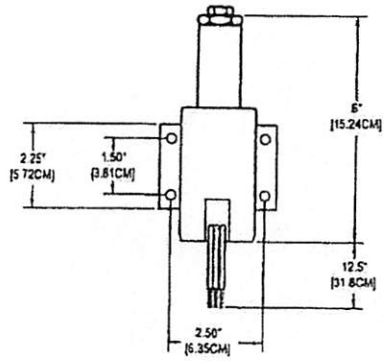

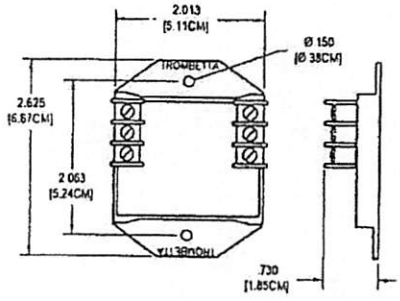

Mounting Procedures:

Use the following procedure to mount your throttle controller:

1. Mount the solenoid and control module according to the recommendations on the "location" instructions.
2. Electrically connect the solenoid to the control module and power source according to the wiring diagram.
3. Mount the cable bracket (1) and fasten the cable sheath to the bracket using the collar nut so the sheath does not turn during idle adjustment.

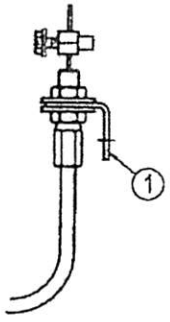

Controlling the Throttle Control Kit:

The throttle kit can be controlled remotely by applying a low current 12 or 24 VDC signal to the module "AUX" terminal. Examples of activating signals are the air compressor pressure switch or air conditioning switching circuits.

Use the following table to determine all wire lengths and gages except "AUX" terminal:

Note: The wire size and length to "AUX" terminal of the control module is not critical because of low current; 16-18 gage wire may be used.

Maximum Lead Length – In Feet*							
System Voltage	Wire Gage						
	18 AWG	16 AWG	14 AWG	12 AWG	10 AWG	8 AWG	6 AWG
12 VDC	2.5 ft.	4 ft.	6 ft.	10 ft.	16 ft.	25 ft.	40 ft.
24 VDC	10 ft.	16 ft.	25 ft.	40 ft.	64 ft.	100 ft.	160 ft.

* Total of "+BAT" and "-BAT" and "WHITE" and "Black" wire lengths.

Trombetta
MOTION TECHNOLOGIES
Strokes of Genius.

Instruction Sheet for P613-K (12 or 24 VDC)

Set Normal Engine Idle Speed

Use the following procedure to set the "normal" engine idle speed with the solenoid de-energized:

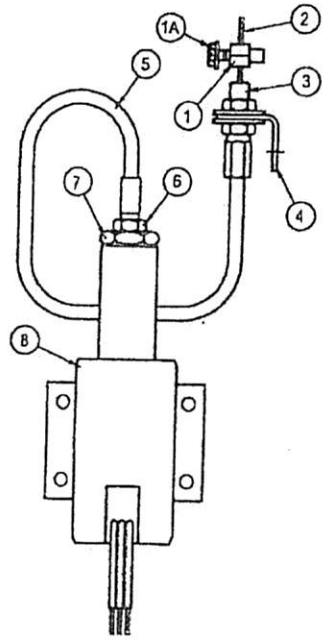

1. With the engine "off" attach the cable pivot assembly (1) to the throttle lever.
   Note: DO NOT tighten the wire core pivot setscrew (1A). The wire core (2) must be free to move through the pivot until step
2. Insert the wire core (2) into the wire core pivot (1)
3. If the cable adjuster is not fully retracted into the solenoid, loosen the jam nut (6) and turn the aluminum adjustment nut (7) counterclockwise until the cable adjustment nut (7) is flush with the solenoid (8).
4. With all connections made to the throttle control systems, apply 12VDC or 24VDC to "AUX" terminal of the control module. Make sure the wire core (2) is free to move through the cable pivot (1) without restriction.
5. Adjust "normal" engine idle speed using the "standard method" required for your engine.
6. Eliminate the slack in the cable (2).
7. Tighten the cable pivot setscrew (1A).

Set High Idle Speed

Use the following procedure to set the "high" engine idle speed with the solenoid activated:

1. Set the "normal" engine idle speed per the previous procedure.
2. With the engine running, apply 12 VDC or 24VDC to the "AUX" terminal of the control module.
3. Make sure the jam nut (6) is loose and turn the aluminum adjustment nut (7) clockwise until the high engine idle speed is reached.
4. Tighten the jam nut (6).
5. Check the throttle speed controller operation rechecking the "normal" engine idle speed with the solenoid deactivated ad high engine idle speed with the solenoid activated. If necessary, repeat the "normal" idle speed and high idle speed adjustments.

Note: Do not leave the aluminum adjustment nut (7) tight against the solehoid body since this does not allow the cable (5) to float.

Trombetta
MOTION TECHNOLOGIES
Strokes of Genius.

Instruction Sheet for P613-K (12 or 24 VDC)

Trombetta Pull Cable Shortening Instructions

Use the following procedures to shorten pull cables supplied with Trombetta products

> **IMPORTANT:** DO NOT cut wire core (2) until step # 11! Remove wire core (2) from cable sheath (5) before cutting the sheathing.

1. Remove the cable assembly (1-7) from the solenoid body (8) by loosening the jam nut (6) and turning the large aluminum adjusting nut (7) "clockwise".

Note: The solenoid "plunger" located inside the solenoid body can be removed at this point. Do not damage or contaminate the plunger while it is out of the solenoid body (8). Be sure to keep the inside of the solenoid body (8) "clean" while the plunger is removed.

2. Remove the wire core (2) from the cable sheath (5)

3. Lightly fixture the cable sheath (5) in a vise or other suitable holding device.

Note: Over tightening the vise may deform the cable sheath (5) and cause the wire core (2) to bind!

> **CAUTION:** Safety Goggles must be worn before proceeding!

4. Use an abrasive "cut-off wheel" (eg. A Dremel tool and Dremel abrasive disk), to cut the cable sheath (5) to the desired length. Deburr and clean the "cut end" of the sheath (5).

5. Mark the cable sheath (5) 1" from the end with a wrap of masking tape (see Fig. C).

6. If the threaded-on bulkhead connector is to be reused, remove it from the cut-off piece of cable sheathing by unthreading it in a counter-clockwise direction. Wipe the connector clean and reuse it for step #8.

7. Wipe the wire core (2) clean and then re-insert this core (2) through the cable sheath (5).

Note: Make sure the wire core (2) moves "freely" inside the cable sheath (5). If it does not, discard the whole cable assembly and replace.

8. Turn the "cable bulkhead fitting" (see fig. A) onto the sheathing (5). Torque to maximum 8 pound-inches. At this point, the fitting should be approximately ¼" or less from the tape mark on the sheath.

> **CAUTION:** Cable bulkhead fitting must engage at least ¾" of the cable sheath to be properly attached. Over tightening the fit may strip the threads.

9. Re-install the cable assembly.

10. Using the "throttle solenoid" setting instructions, proceed with setting the throttle solenoids.

11. After the throttle solenoid is set and connections are tightened, cut the excess wire core approximately "one" inch beyond the cable pivot (1).

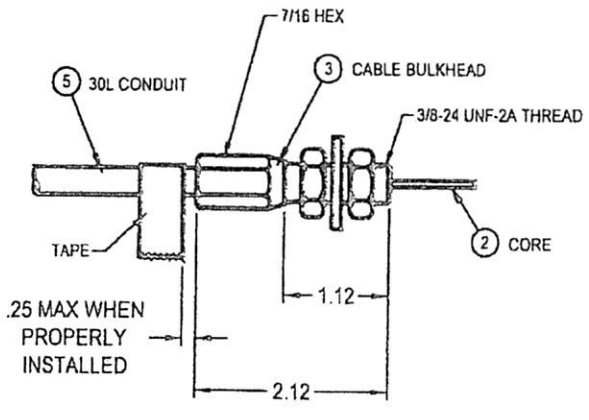

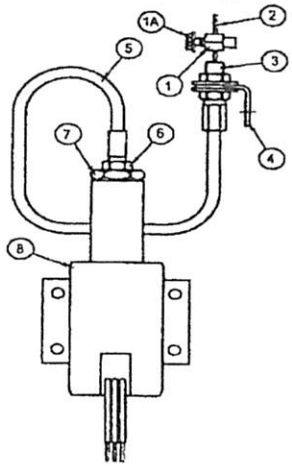

CHAPTER 7

SKYLIFT PATRIOT 40/50
PARTS BREAKDOWN

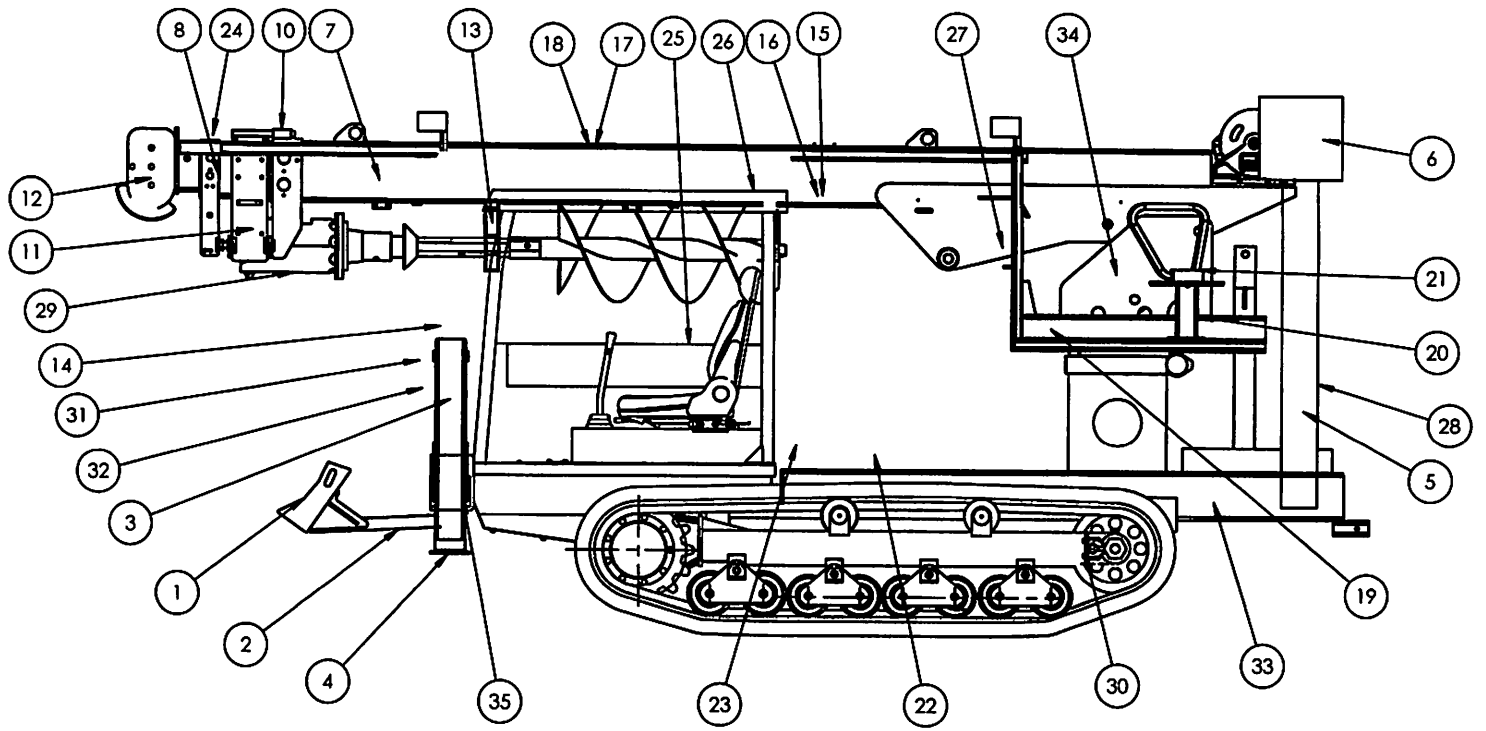

SKYLIFT PATRIOT 40/50 FABRICATED PARTS LIST

ITEM NO.	PART NO.	QTY	DESCRIPTION
1	2742-2 (blade)	1	Blade
2	2742-1 (Blade frame)	1	Blade frame
3	2559 (A-frame)	1	Front A-frame
4	2566 (A-frame)	2	Inner outrigger leg for A-Frame
5	2760 (rr out leg)	2	Rear radial outrigger leg only
6	2770 (foot pad)	2	Rear radial outrigger foot pad.
7	SEE BELOW		
8	SEE BELOW		
9	None		
10	2247 (guide pins)	2	Guide pins for auger hanger top plate
11	SEE BELOW		
12	3018 (sheave)	1	Sheave head
13	2604A (auger stow)	1	Auger stow bracket includes mounting hardware
14	2787 (boom stow)	1	Boom stow
15	SEE BELOW		
16	SEE BELOW		
17	SEE BELOW		
18	SEE BELOW		
19	2638 (op platform)	1	Operator platform
20	2388 (seat post)	1	Seat post
21	2394 (seat rails)	1	Seat rails
22	2706 (deck)	1	Deck assembly
23	2850 (platform)	1	Bucket platform
24	2729 (rope guide)	1	Front rope guide with roller
25	2601 (heat support)	1	Heat exchanger supports
26	2897 (bucket receiver)	1	Bucket stow receiver
27	2370 (op cover)	1	Valve cover for main controls on operator platform
28	2093C (cyl cover)	1	Rear outrigger cylinder cover
29	2616 (planetary housing)	1	Planetary tube for housing the gear reduction drive and motor
30	2805 (step)	1	Fixed step
31	2775 (rr pole carrier)	1	Rear pole carrier
32	2776 (frt pole carrier)	1	Front pole carrier
33	2722 (frame)	1	Main frame weldment
34	2721 (turret)	1	Turret
35	2537 (light guard)	1	Light guard. Please specify right or left.
	PATRIOT 50 ONLY		
7	2871A (main boom)	1	Main boom
8	2880 (boom 2)	1	Secondary boom
11	2890 (auger hanger)	1	Auger hanger for patriot
15	2886 (cattrack tube)	1	Main cattrack tube
16	2885-1 (cat cover)	1	Short section of main cattrack cover
16	2885-2 (cat cover)	1	Long section of main cattrack cover
17	2888 (auger tube)	1	Main auger side cattrack tube
17	2582 (Auger Tube)	1	Auger side cattrack tube movable
18	2887 (auger cover)	1	Auger side cattrack cover
	PATRIOT 40 ONLY		
7	2467 (main boom)	1	Main boom
8	2156 (boom 2)	1	Secondary boom
11	2623B (auger hanger	1	Auger hanger
15	2141 (cattrack tube)	1	Main cattrack tube
16	2091 (cattrack cover)	1	Main cattrack cover
17	2147 (auger tube)	1	Main auger side cattrack
17	2153 (auger tube)	1	Auger side cattrack tube moveable
18	2092 (auger cover)	1	Auger side cattrack cover

CHAPTER 8

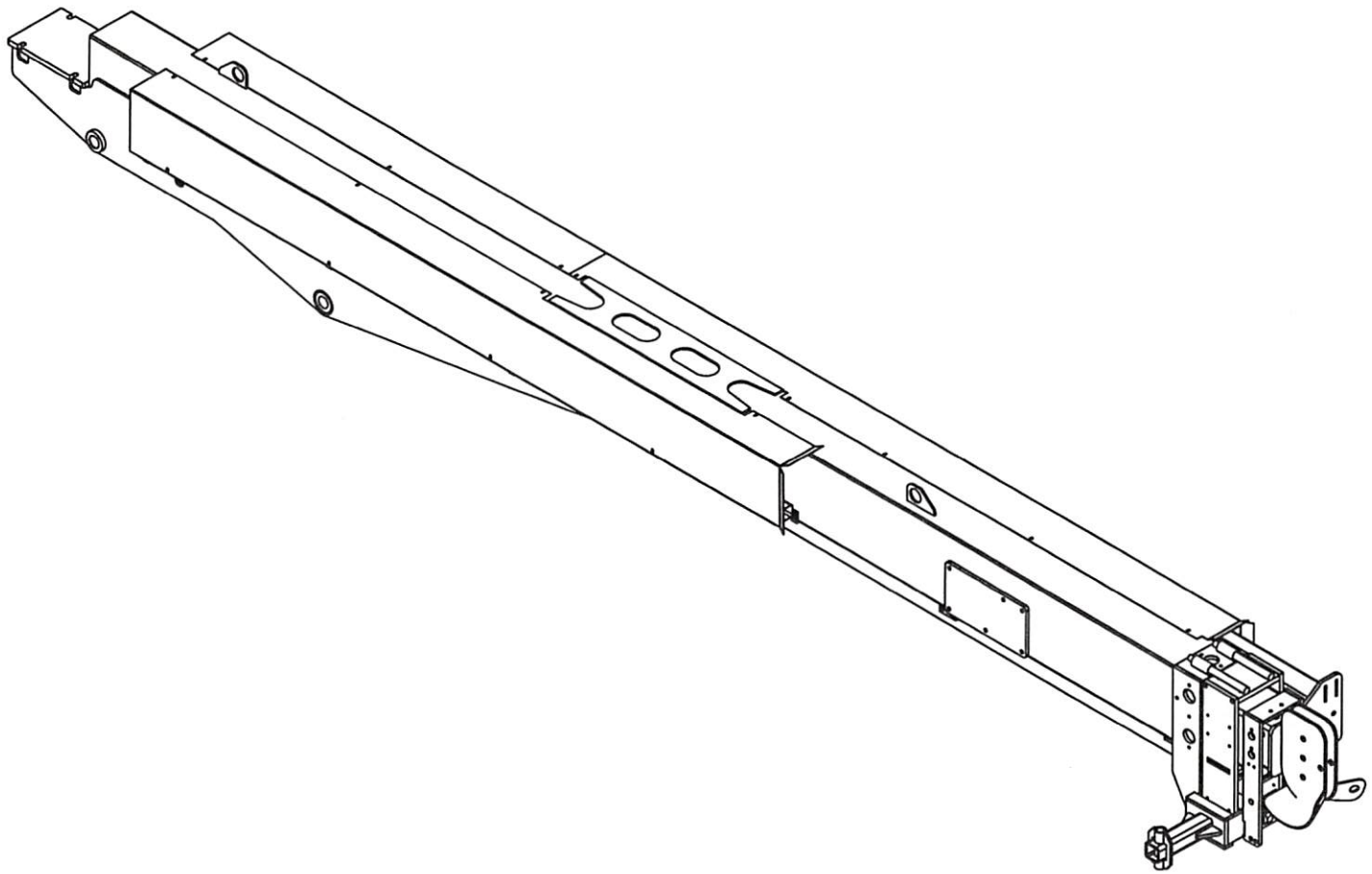

		UNLESS OTHERWISE SPECIFIED:		NAME	DATE
USED ON PATRIOT		DIMENSIONS ARE IN INCHES TOLERANCES: FRACTIONAL ± 1/32 ANGULAR: MACH ± 1° BEND ± 2° TWO PLACE DECIMAL ±.010 THREE PLACE DECIMAL ±.005	DRAWN	KLB	8/13/13
			CHECKED		
			ENG APPR.		
			MFG APPR.		
		INTERPRET GEOMETRIC TOLERANCING PER:	Q.A.		
		MATERIAL	COMMENTS:		
	NEXT ASSY / USED ON	FINISH			
	APPLICATION	DO NOT SCALE DRAWING			

PROPRIETARY AND CONFIDENTIAL
THE INFORMATION CONTAINED IN THIS DRAWING IS THE SOLE PROPERTY OF <INSERT COMPANY NAME HERE>. ANY REPRODUCTION IN PART OR AS A WHOLE WITHOUT THE WRITTEN PERMISSION OF <INSERT COMPANY NAME HERE> IS PROHIBITED.

SKYLIFT Inc

TITLE: LOW-PRO 50' BOOM

SIZE	DWG. NO.	REV
B	2870	

SCALE: 1:32 WEIGHT: SHEET 1 OF 1

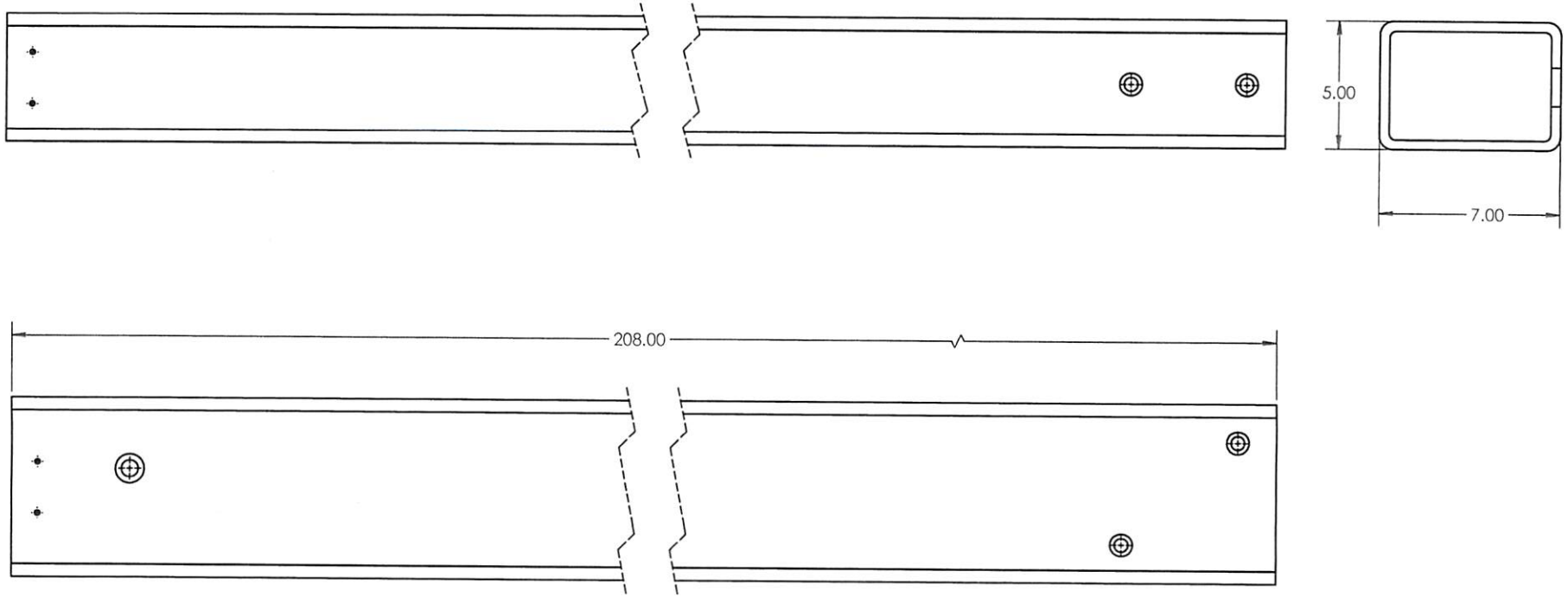

USED ON

50' BOOM

PROPRIETARY AND CONFIDENTIAL

THE INFORMATION CONTAINED IN THIS DRAWING IS THE SOLE PROPERTY OF <INSERT COMPANY NAME HERE>. ANY REPRODUCTION IN PART OR AS A WHOLE WITHOUT THE WRITTEN PERMISSION OF <INSERT COMPANY NAME HERE> IS PROHIBITED.

NEXT ASSY	USED ON
APPLICATION	

UNLESS OTHERWISE SPECIFIED:

DIMENSIONS ARE IN INCHES
TOLERANCES:
FRACTIONAL ± 1/32
ANGULAR: MACH ± 1° BEND ± 2°
TWO PLACE DECIMAL ±.010
THREE PLACE DECIMAL ±.005

INTERPRET GEOMETRIC TOLERANCING PER:

MATERIAL

FINISH

DO NOT SCALE DRAWING

	NAME	DATE
DRAWN	KLB	9/11/12
CHECKED		
ENG APPR.		
MFG APPR.		
Q.A.		

COMMENTS:

SKYLIFT Inc

TITLE: 50' FIBERGLASS BOOM

SIZE	DWG. NO.	REV
B	2574	

SCALE: 1:24 WEIGHT: SHEET 1 OF 1

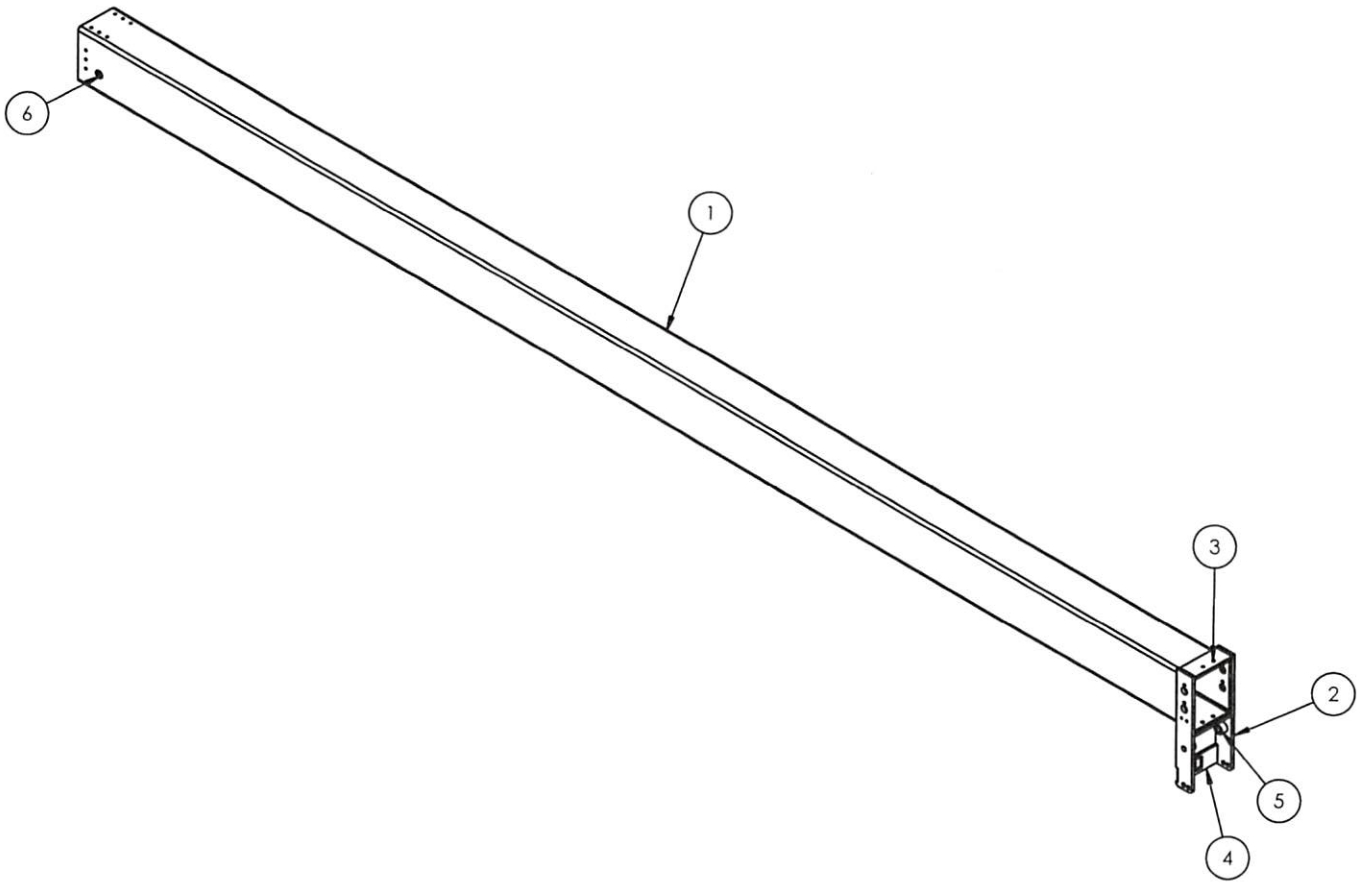

ITEM NO.	PART NUMBER	DESCRIPTION	QTY.
1	2573	50' SECONDARY BOOM TUBE	1
2	2158	SECONDARY BOOM SIDE PLATE	2
3	2159	BOOM TIP PLATE	2
4	2160	AUGER RETAINER PLATE-SECONDARY BOOM	1
5	2161	BOSS - FRONT	2
6	2162	BOSS - REAR	2

USED ON

PATRIOT

PROPRIETARY AND CONFIDENTIAL

THE INFORMATION CONTAINED IN THIS DRAWING IS THE SOLE PROPERTY OF <INSERT COMPANY NAME HERE>. ANY REPRODUCTION IN PART OR AS A WHOLE WITHOUT THE WRITTEN PERMISSION OF <INSERT COMPANY NAME HERE> IS PROHIBITED.

NEXT ASSY | USED ON

APPLICATION

UNLESS OTHERWISE SPECIFIED:

DIMENSIONS ARE IN INCHES
TOLERANCES:
FRACTIONAL ± 1/32
ANGULAR: MACH ± 1° BEND ±2°
TWO PLACE DECIMAL ±.010
THREE PLACE DECIMAL ±.005

INTERPRET GEOMETRIC TOLERANCING PER:

MATERIAL

FINISH

DO NOT SCALE DRAWING

	NAME	DATE
DRAWN	KLB	2/19/13
CHECKED		
ENG APPR.		
MFG APPR.		
Q.A.		

COMMENTS:

SKYLIFT Inc

TITLE:
SECONDARY BOOM

SIZE	DWG. NO.	REV
B	2568	

SCALE: 1:24 | WEIGHT: | SHEET 2 OF 2

REVISIONS			
REV.	DESCRIPTION	DATE	APPROVED
A	REDESIGNED SWING BRACKET	1/18/2013	KLB

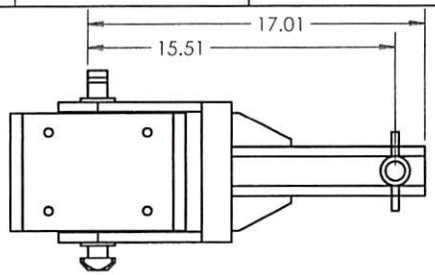

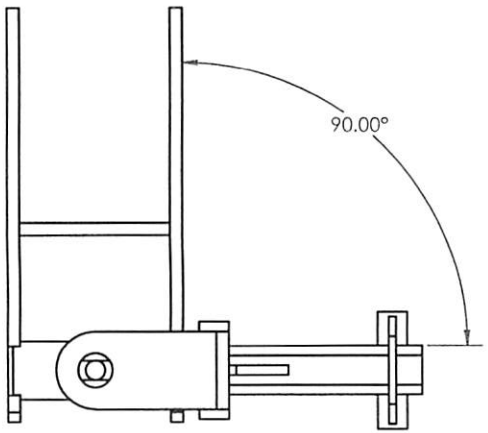

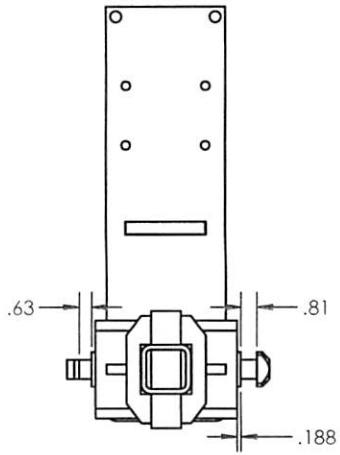

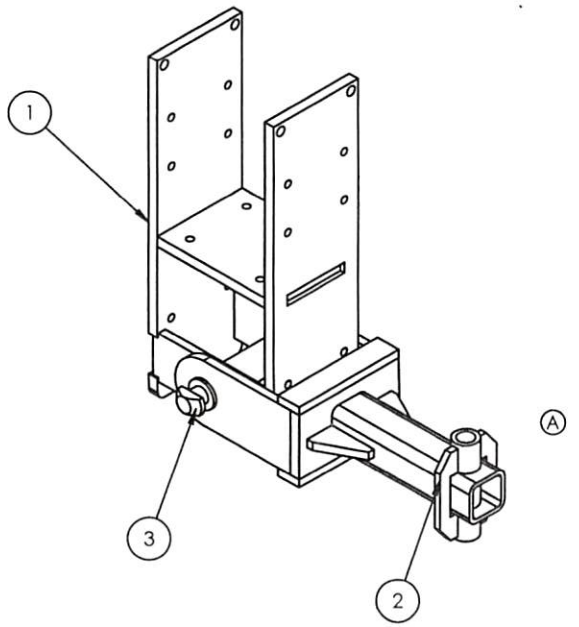

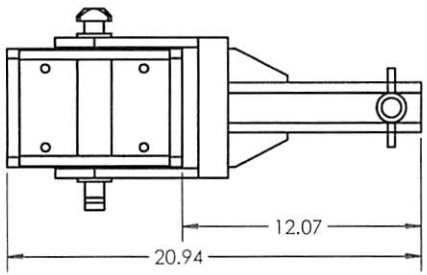

ITEM NO.	PART NUMBER	DESCRIPTION	QTY.
1	2624	AUGER SWING ASSY BRKT BOOM MNT	1
2	2612A	AUGER SWING BRACKET	1
3	2227A	AUGER SWING LOCK PIN	1

USED ON

PROPRIETARY AND CONFIDENTIAL

THE INFORMATION CONTAINED IN THIS DRAWING IS THE SOLE PROPERTY OF <INSERT COMPANY NAME HERE>. ANY REPRODUCTION IN PART OR AS A WHOLE WITHOUT THE WRITTEN PERMISSION OF <INSERT COMPANY NAME HERE> IS PROHIBITED.

NEXT ASSY | USED ON

APPLICATION

UNLESS OTHERWISE SPECIFIED:

DIMENSIONS ARE IN INCHES
TOLERANCES:
FRACTIONAL ± 1/32
ANGULAR: MACH ± 1° BEND ±2°
TWO PLACE DECIMAL ±.010
THREE PLACE DECIMAL ±.005

INTERPRET GEOMETRIC TOLERANCING PER:

MATERIAL

FINISH

DO NOT SCALE DRAWING

	NAME	DATE
DRAWN	KLB	1/12/13
CHECKED		
ENG APPR.		
MFG APPR.		
Q.A.		

COMMENTS:

SKYLIFT Inc

TITLE: Auger Hanger Assembly

SIZE	DWG. NO.	REV
B	2623A	A

SCALE: 1:8 | WEIGHT: | SHEET 1 OF 1

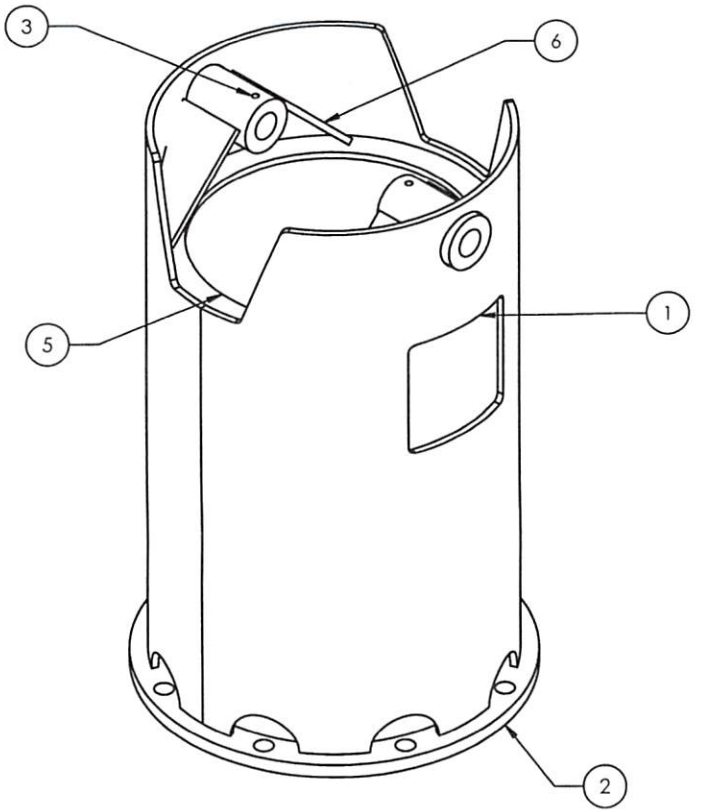

ITEM NO.	PART NUMBER	DESCRIPTION	QTY.
1	2617	AUGER PLANETARY TUBE	1
2	2618	PLANETARY GEAR DRIVE RING	1
3	2619	PLANETARY HOUSING BOSS	2
4	2620	BAIL GUSSET	4
5	2622	BAIL SUPPORT RING	1
6	bail gusset		4

USED ON

PROPRIETARY AND CONFIDENTIAL

THE INFORMATION CONTAINED IN THIS DRAWING IS THE SOLE PROPERTY OF <INSERT COMPANY NAME HERE>. ANY REPRODUCTION IN PART OR AS A WHOLE WITHOUT THE WRITTEN PERMISSION OF <INSERT COMPANY NAME HERE> IS PROHIBITED.

NEXT ASSY | USED ON

APPLICATION

UNLESS OTHERWISE SPECIFIED:

DIMENSIONS ARE IN INCHES
TOLERANCES:
FRACTIONAL ± 1/32
ANGULAR: MACH ± 1° BEND ±2°
TWO PLACE DECIMAL ±.010
THREE PLACE DECIMAL ±.005

INTERPRET GEOMETRIC TOLERANCING PER:

MATERIAL

FINISH

DO NOT SCALE DRAWING

	NAME	DATE
DRAWN	KLB	11/5/09
CHECKED		
ENG APPR.		
MFG APPR.		
Q.A.		

COMMENTS:

SKYLIFT Inc

TITLE: AUGER GEAR HOUSING

SIZE	DWG. NO.	REV
B	2616A	A

SCALE: 1:8 | WEIGHT: | SHEET 2 OF 2

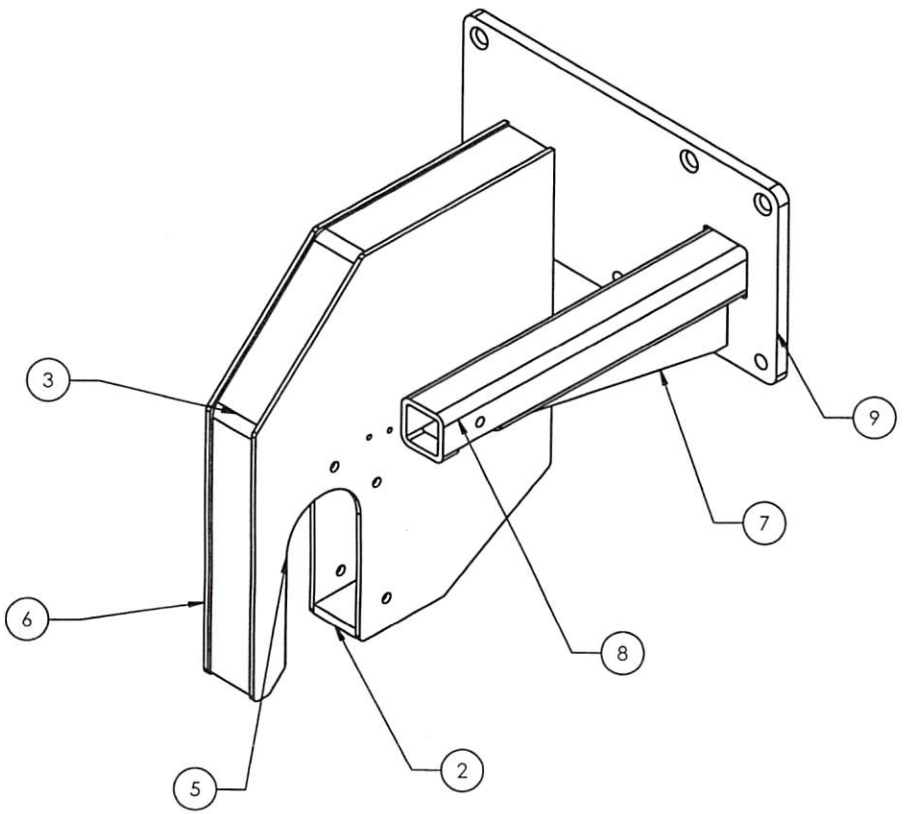

ITEM NO.	PART NUMBER	DESCRIPTION	QTY.
1	2605	AUGER STOW BRKT RIB, INTERNAL	1
2	2606	AUGER STOW BRKT RIB, SMALL	1
3	2607	AUGER STOW BRKT RIB, LARGE	1
4	2172	AUGER STOW BRKT GUIDE BLOCK	1
5	2608	AUGER STOW BRKT INSIDE PLATE	1
6	2609	AUGER STOW BRKT OUTSIDE PLATE	1
7	2610	GUSSET	1
8	2611	STRAP HANGER TUBE	1
9	2177	M.D. AUGER STOW BASE PLATE	1

USED ON

PROPRIETARY AND CONFIDENTIAL

THE INFORMATION CONTAINED IN THIS DRAWING IS THE SOLE PROPERTY OF <INSERT COMPANY NAME HERE>. ANY REPRODUCTION IN PART OR AS A WHOLE WITHOUT THE WRITTEN PERMISSION OF <INSERT COMPANY NAME HERE> IS PROHIBITED.

NEXT ASSY	USED ON
APPLICATION	

UNLESS OTHERWISE SPECIFIED:

DIMENSIONS ARE IN INCHES
TOLERANCES:
FRACTIONAL ± 1/32
ANGULAR: MACH ± 1° BEND ±2°
TWO PLACE DECIMAL ±.010
THREE PLACE DECIMAL ±.005

INTERPRET GEOMETRIC TOLERANCING PER:

MATERIAL

FINISH

DO NOT SCALE DRAWING

	NAME	DATE
DRAWN	KLB	10/15/09
CHECKED		
ENG APPR.		
MFG APPR.		
Q.A.		

COMMENTS:

SKYLIFT Inc

TITLE:
AUGER STOW BRACKET

SIZE	DWG. NO.	REV
B	2604	

SCALE: 1:8 | WEIGHT: | SHEET 2 OF 2

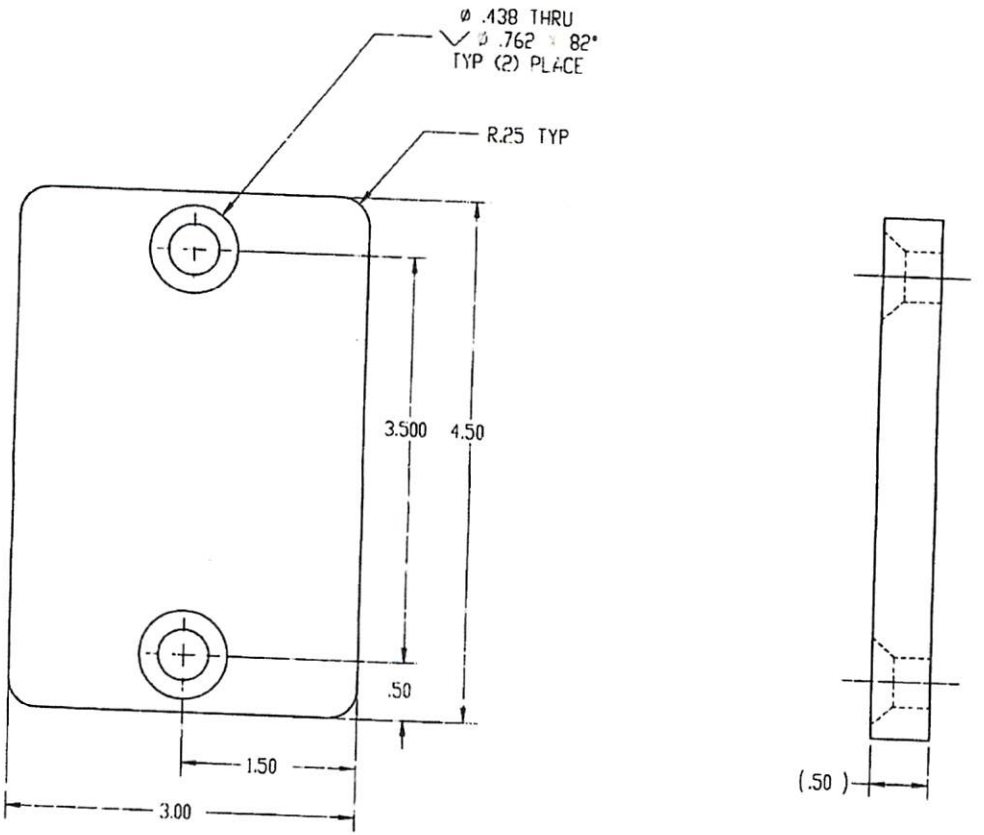

PROPRIETARY AND CONFIDENTIAL
THE INFORMATION CONTAINED IN THIS DRAWING IS THE SOLE PROPERTY OF (INSERT COMPANY NAME HERE) ANY REPRODUCTION IN PART OR AS A WHOLE WITHOUT THE WRITTEN PERMISSION OF (INSERT COMPANY NAME HERE) IS PROHIBITED.

NEXT ASSY	USED ON
APPLICATION	

UNLESS OTHERWISE SPECIFIED
DIMENSIONS ARE IN INCHES
TOLERANCES:
FRACTIONAL ±
ANGULAR: MACH ± BEND
TWO PLACE DECIMAL ±
THREE PLACE DECIMAL ±
INTERPRET GEOMETRIC TOLERANCING PER
MATERIAL .500" THCK MAT'L
FINISH WHITE
DO NOT SCALE DRAWING

	NAME	DATE
DRAWN	T.MEYER	10/17/08
CHECKED		
ENG APPR		
MFG APPR		
QA		
COMMENTS:		

SKYLIFT Inc

TITLE: MAIN BOOM PUCK COVER SMALL

SIZE B | DWG. NO. 2435 | REV

SCALE: 1:1 | WEIGHT: | SHEET 1 OF 1

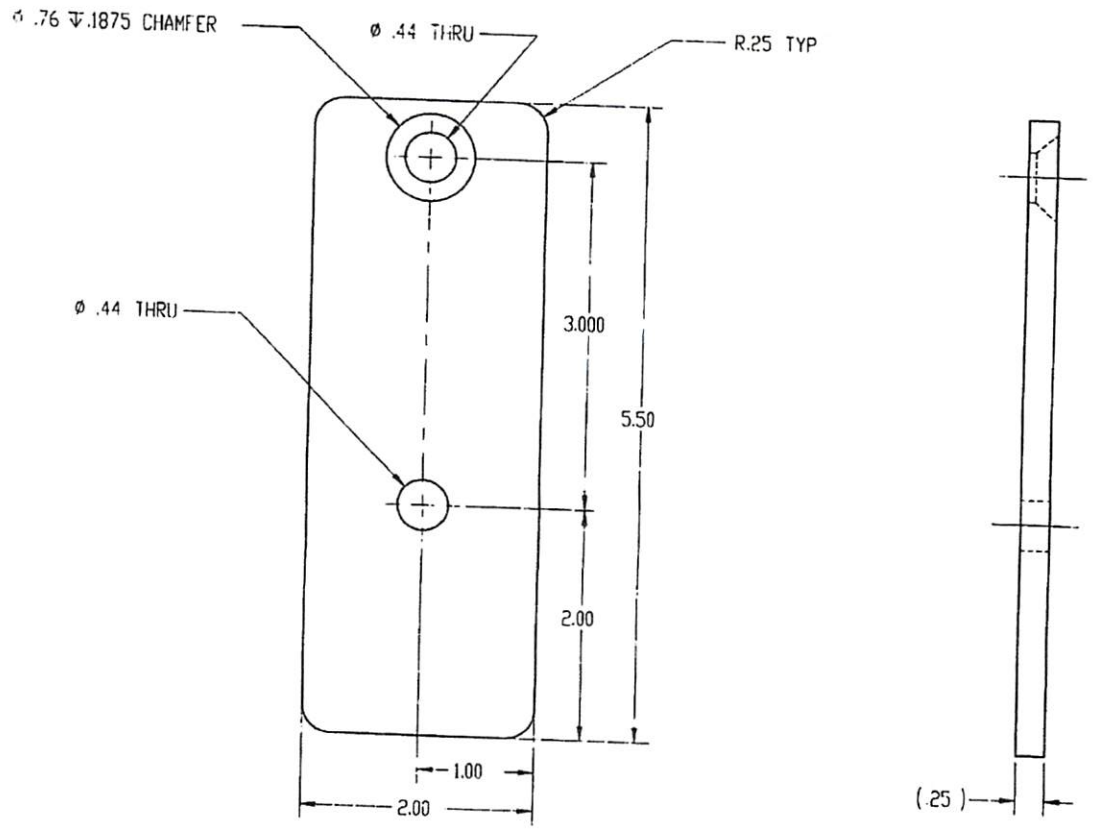

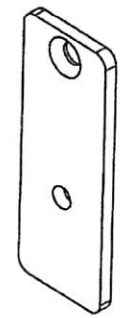

PROPRIETARY AND CONFIDENTIAL
THE INFORMATION CONTAINED IN THIS DRAWING IS THE SOLE PROPERTY OF (INSERT COMPANY NAME HERE). ANY REPRODUCTION IN PART OR AS A WHOLE WITHOUT THE WRITTEN PERMISSION OF (INSERT COMPANY NAME HERE) IS PROHIBITED.

NEXT ASSY	USED ON
APPLICATION	

UNLESS OTHERWISE SPECIFIED
DIMENSIONS ARE IN INCHES
TOLERANCES:
FRACTIONAL ±
ANGULAR: MACH ± BEND
TWO PLACE DECIMAL ±
THREE PLACE DECIMAL ±
INTERPRET GEOMETRIC TOLERANCING PER:
MATERIAL .250" THCK MAT'L
FINISH WHITE
DO NOT SCALE DRAWING

	NAME	DATE
DRAWN	T.MEYER	7/11/08
CHECKED		
ENG APPR.		
MFG APPR.		
Q.A.		
COMMENTS:		

SKYLIFT Inc.

TITLE: SECONDARY BOOM PUCK COVER

SIZE B | DWG. NO. 2155 | REV

SCALE: 1:1 | WEIGHT: | SHEET 1 OF 1

Waco Boom Company Ltd

Warranty Policy

This warranty is issued to the original purchaser only and applies only to booms, which have been used for their intended purpose, within designed capacities, and not subjected to abuse, misuse and/or improper maintenance.

We will repair or replace booms at our discretion, found upon our inspection at Waco Boom Company Ltd, to be defective in material or our workmanship for up to one year from the date of placement into service or 18 months from date of shipment from Waco Boom Company Ltd., whichever comes first.

481 Texas Central Parkway ▪ PO Box 20667 ▪ Waco, Texas 76702-0667 ▪ 254-776-1695 ▪ Fax 254-776-2556
www.wacoboom.com

The Most Common Maintenance Issues With Fiberglass Booms

1. Not keeping the boom clean inside and out
A dirty boom does not shed rain as well and can fail periodic dielectric tests.

2. Cleaning with harsh abrasive cleaners
Abrasives and solvent cleaners are not recommended as they can scratch or soften the surface coatings. There are a number of cleaners recommended for cleaning booms or you can use soap and water. Consult the service department of your manufacturer for their recommendations.

3. Washing with high-pressure water
This can cause water to diffuse through the fiberglass requiring elevated temperatures or extended time to dry out. Wash by hand and park the boom in a position that allows water to drain. A boom dielectrically tested while it is still wet can cause permanent damage.

4. Surface cracks due to weather, age or improper paint preparation
These kinds of problems will require refinishing. However, refinishing the exterior of the booms without masking the interior can cause paint overspray to settle on the inside. Our research has shown that this overspray will trap moisture and prevent water from beading on this rough, sandpaper-like surface. This moisture can then lead to failed dielectric tests.

5. Dielectric testing over 1mA (1000 micro-amps) return current
This process can harm the boom by causing it to burn. If, during your dielectric test, you reach a return current close to 1000 micro-amps, stop the test immediately and examine the boom for a hot spot. Examine the boom for any contamination such as: dirt, moisture, sticks or other debris. Let the boom cool and remove the contamination. (Dirt or moisture can cause the fiberglass to be burnt beyond repair.)

6. Overloading
Even if the boom does not break, overloading can cause stress cracks and shorten the life of the fiberglass boom. A single overload can shorten a booms service life by months or years. A boom used at the rated load should remain in service for many years.

7. Not strapping down the boom during travel
Subjecting a boom to repeated jolts can shorten the life of the fiberglass. This shock loading will fatigue the fiberglass and can create impact damage in the area of the boom rest.

8. Cable cuts and saw cuts
Cuts can weaken the boom in the specific area of the damage. Consult the manufacturer before repairing this type of damage.

481 Texas Central Parkway • PO Box 20667 • Waco, Texas 76702-0667 • 254-776-1695 • Fax 254-776-2556
www.wacoboom.com

9. Sunshine and ultraviolet radiation

Sunlight and UV can attack an unpainted area of a fiberglass boom causing the exposed area to look fuzzy as the fibers are exposed. Repair surface scratches, to seal out the sun and moisture, to prevent this problem. Watson has a written procedure and instructions on refinishing an insulated fiberglass boom which can be requested by email at watson@watsoncoatings.com

10. Improper repairs

Using substandard material and improper repair procedures can cause problems. There are two types of repairs. The first is periodic surface repair that involves the outside coating. Second is the structural repair that involves the boom itself. Structural repair should be referred to the manufacturer for a case-by-case study. Examples of structural damage include: cracks, cuts, delamination and impact damage from tree limbs or tools.

11. Improper Storage

Storing fiberglass booms in direct sunlight, untarped or covered, and directly on the ground are both methods of improper storage which could cause blistering and dielectric failure. Improper storage could also void the warranty. Storage of booms should always be off the ground for air ventilation and away from direct sunlight.

481 Texas Central Parkway • PO Box 20667 • Waco, Texas 76702-0667 • 254-776-1695 • Fax 254-776-2556
www.wacoboom.com

CHAPTER 9

SCANRECO
NORTH AMERICA
Radio Remote Control

Installation and Quick Start Guide

G2B Radio Remote Control System

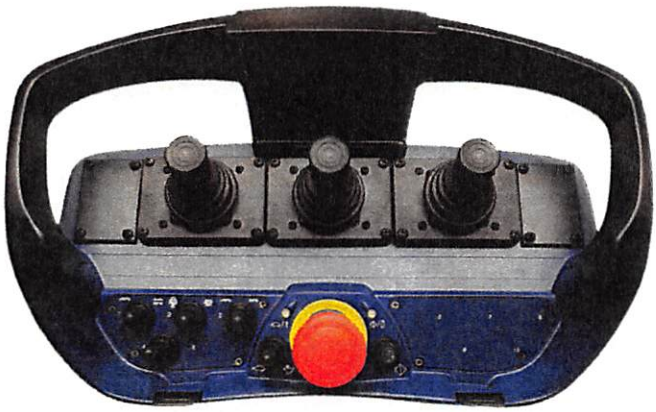

System Name	Manual Part Number	Revision	Date
Skylift Patriot LCD Quick Start Guide	MAN-G2B-XX	Rev 1	April 5, 2017

SCANRECO

Table of Contents

1 G2B System Overview 3

2 CU Installation and Wiring 4

2.A Locating the CU 4
2.B Grease Contacts 4
2.C Feed Cable 4
2.C Secure Cable 4
2.E Terminal Schematic 5
2.F Special Logic Functions 6
2.G Wire I/O 6

3 CU (Receiver) Overview 7

3.1 CU Layout and Indicators 7
3.2 RF Antenna 7
3.3 Remote / Off / Manual Switch 7
3.4 Tether/Programming Connector 7
3.5 DV and Status LED's 8
3.6 Internal LED Display 8
3.6.1 Operational Indicators 8
3.6.2 Error Indicators 9

4 PCU (Transmitter) Overview 11

4.1 Switch and Paddle Layout 11
4.2 Power / Stop / Micro Switch Panel 12
4.3 Battery and Charging 12
4.4 Powering the PCU 13
4.5 Micro Speed Switch Operation 13
4.6 Downloading ID: Pairing PCU and CU 14

Revision	Date	Name	Notes
1	04/05/2017	OPS	Initial Release

1 G2B System Overview

This guide is intended as a complement to the Service Manual and Remote Control System RC400 G2 Instruction manual. It is a brief overview of the important features of a specific radio remote control system. Installers and Operators must read the Service Manual and Instruction manual before installing / operating the system and adhere to all warnings and recommendations.

The Scanreco G2B Radio Control (RC) System offers the machine operator an extremely advanced remote control system with speed, precision, control and maximum safety. The G2B RC System is comprised of the following components:

No	SNA Part Number	Description	Qty
N/A		Typically includes all items listed below	N/A
1	PCU-MINI-XX	Portable Control Unit (PCU) Mini or Maxi (shown)	1
2	3011	Central Unit (CU)	1
3	434	Battery charger	1
4	592	Battery cassette (NiMH 7.2 VDC)	2
5	47545	Tether cable (10 meters)	1

2 CU Installation and Wiring

The following instructions will help an installer wire the Central Unit to the controls of your specific machine. The installer may choose to make the wiring harness himself or use the generic Scanreco wiring harnesses for ease of installation. Please consult your sales representative for more information regarding generic wiring harnesses.

Read this entire section before proceeding with the installation. In order to maximize product life and prevent involuntary service, **this section must be followed** when installing and wiring your CU.

Important Notice About Welding!

If you plan to do any welding on the machine after the CU has been installed; the CU's electrical connections **must always be disconnected**! Power supply cables (+ and -), all valve contacts, tether and all other wiring to the CU must be disconnected. Welding can cause severe damage to all vehicle electronics and if detected may void your warranty.

A. Locating the CU

BEST No No

- **For optimum radio communications** the CU or external antenna should be located as high on the machine and free from obstructions as possible. An antenna screened and surrounded by fixed objects (especially metal) will considerably reduce radio range
- The antenna pin must not touch any metal object
- The central unit should be mounted in a vibration free location and not be subjected to strong sources of heat (for example exhaust pipes etc.)

B. Apply Grease to Contact Pins

If grease is not already applied to all the connector pins of the CU (shown in the picture); be sure to add water resistant grease suitable for electronic applications to the areas noted.

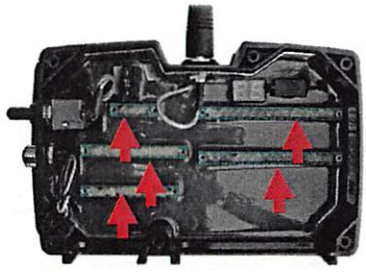

C. Feed Cable Through Membrane

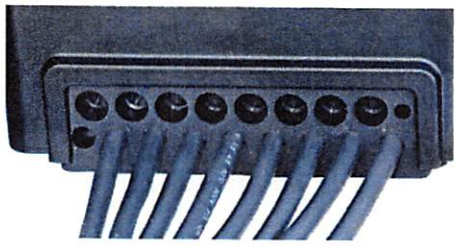

Pierce the membrane and feed the cable through. A tight fit ensures a good seal.

D. Secure Cable

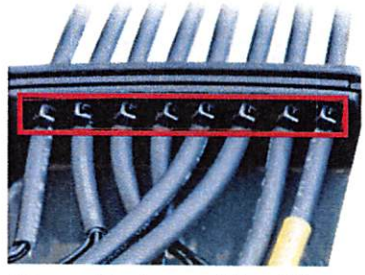

Secure the inner side of the cable with a cable tie or similar.

SCANRECO

E. Terminal Schematic

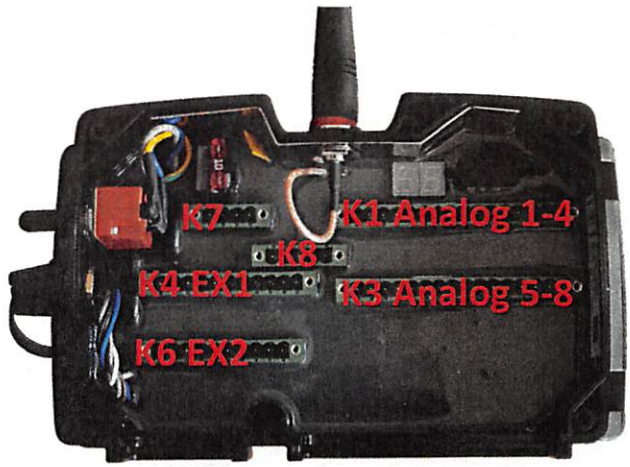

Note: Pin 1 starts on the Left for all connectors.

K7 Main

Pin no	Function	
K7.1	Supply (+12/24VDC)	RED
K7.2	Ground (GND)	Black
K7.3	Dump Valve Out (DV+)	Org/Grn
K7.4	DV GND	Black

Note: An electrically controlled dump valve should always be connected, for safety reasons, between the function valves and the hydraulic tank. **During a system stop DV+ will be off** to ensure the system is without hydraulic

K1 Analog Outputs

Pin no	No	Function Name	
K1.1	1A	Jib/Pole Guide/Tilt/Can-H	Green
K1.2		GND	Black
K1.3	1B	Jib/Pole Guide/Tilt/Can-H	Gray
K1.4		GND	Black
K1.5	2A	Auger/Winch Down	Brown
K1.6		GND	Black
K1.7	2B	Auger/Winch Up	Blue/White
K1.8		GND	Black
K1.9	3A	Boom CW	Red/Black
K1.10		GND	Black
K1.11	3B	Boom CCW	Purple
K1.12		GND	Black
K1.13	4A	Boom 2 Out	Yellow/Black
K1.14		GND	Black
K1.15	4B	Boom 2 In	Yellow
K1.16		GND	Black

K3 Analog Outputs

Pin no	No	Function Name	
K3.1	5A	Boom 3 Out	Black/Red
K3.2		GND	Black
K3.3	5B	Boom 3 In	Black/Yellow
K3.4		GND	Black
K3.5	6A	Boom Down	Black/White
K3.6		GND	Black
K3.7	6B	Boom Up	White/Black
K3.8		GND	Black
K3.9	7A		
K3.10			
K3.11	7B		
K3.12			
K3.13	8A		
K3.14			
K3.15	8B		
K3.16			

K4 EX1—Digital Outputs / Inputs

Pin no	Function	
K4.1	RPM High	Orange
K4.2	Engine Start	Tan
K4.3	Engine Stop	Blue
K4.4	Unused Digital Output 4	
K4.5	Boom Enabled	Org/Blk
K4.6	Unused Digital Output 6	
K4.7	GND	
K4.8	Feeder Set Input	
K4.9	Digital input 2	
K4.10	Digital input 3	
K4.11	Input supply (+VDC)	

K6 EX2—Digital Outputs / Inputs

Pin no	Function	
K6.1	Tool Circuit On	Yellow/Green
K6.2	Tool Circuit On	White/Black/Red
K6.3	Pole Claw Tilt ON	Green/Blk/Wht
K6.4	Unused Digital Output 10	
K6.5	GND	Black
K6.6	Unused Digital Output 11	
K6.7	Unused Digital Output 12	
K6.8	Unused Digital Output 13	
K6.9	Unused Digital Output 14	
K6.10	GND	

K8 EX3—Optional Features

Pin no	Function
K8.1	CAN High
K8.2	CAN Low
K8.3	CAN GND
K8.4	Not Used
K8.5	Not Used

F. Special Logic Functions

BOOM ENABLE switch (S9) must be in the LINK position for the transmitter to link to the receiver.

Analog Outputs 1 - 6 and the POLE CLAW TILT outputs only operate when the BOOM ENABLE switch is held in position on either side.

Engine Start is disabled when Boom is enabled.

The transmitter will shut itself off as a battery saving measure after **10 minutes** of inactivity.

G. Wire Inputs / Outputs

Inputs and Outputs need to be wired to the appropriate functions on the machine and in the CU. Leave unused and spare functions un-terminated.

Install 22-18AWG wire, appropriate for current consumption of loads (1.5 Amps max per output) with proper sized Ferrell cable end.

Orient cables as shown and apply water resistant grease suitable for electronic applications to the terminal connectors.

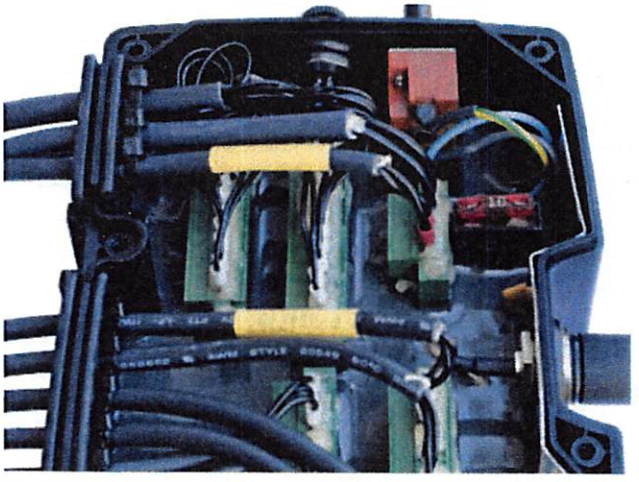

3 CU (Receiver)

3.1 CU Layout and Indicators

The Central Unit is equipped with 2 individual positions where status and operational indications can be read, the external LED's: DV and STATUS provide basic information. The internal LED display provides more detailed information. Below is the layout of the CU:

No	Description
1	RF Antenna
2	Remote / OFF / Manual Switch
3	Tether / Programming Connector
4	DV and STATUS LED's
5	Internal LED Display

Note: For CU's build before Fall 2010 the CU cover must be removed to view the Internal LED Display; for later units there is a viewing window as shown.

3.2 RF Antenna

The Central Unit show has a standard whip antenna with TNC connector. Optional antennas are available for various types of installations and range requirements. Please consult your sales representative for more information.

3.3 Remote / OFF / Manual Switch

The Central Unit is equipped with a Remote / OFF / Manual Switch to power the CU in different modes of operation:

- OFF: there is no power to the internal electronics, Dump Valve or any outputs
- REMOTE: electronics are powered; PCU can link to CU and Dump Valve and outputs operate as specified
- MANUAL: there is no power to the internal electronics or any outputs; Dump Valve is ON. This bypasses the Dump Valve output to enable operation of manual or hand lever controls, if equipped.

3.4 Tether / Programming Connector

The CU can be connected through the Tether Connector to the PCU via a 5 wire tether cable. The cable has M12 connectors at each end.

The tether cable disables the RF transmission and charges the PCU battery, if installed. The cable is available in standard lengths of 10 meters.

The CU can also be connected to a PC for programming an calibration. Refer to Service Manual and WinSCI Manual for further details.

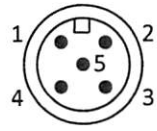

Pin No	Description
1	Data
2	Ground
3	RS232 TX
4	RS232 RX
5	+ Battery (VDC)

3.5 DV and STATUS LED's

Operational status indications can be read from the DV and STATUS LED's as follows:

Status LED	Description
OFF	CU is OFF or not powered
RED	CU is ON with no link to PCU
GREEN	CU is ON and linked with PCU (via cable or RF)
RED Flashing	Error code on Internal LED Display (see Section 3.6.2)

DV LED (Dump Valve)	Description
OFF	Dump Valve Output is OFF
RED	Dump Valve Output is ON

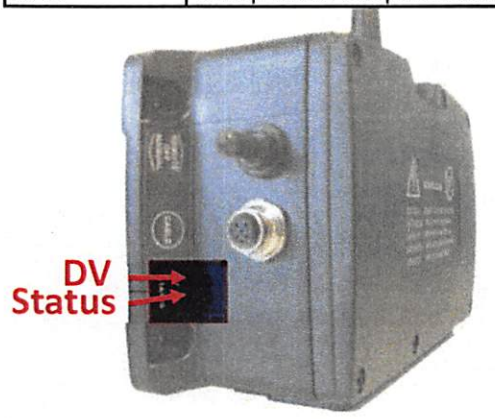

3.6 Internal LED Display

3.6.1 Operational Indicators

The Central Unit will indicate various operational states via the Internal LED display as shown below:

Indication		**Meaning**
Block 1	**Block 2**	
	(Rotating CCW)	CU is powered and not Linked to PCU
	N/A	Primary PCU is linked to CU via Radio, **H**opping (IH flashes as link gets weaker)
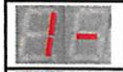	N/A	CU is linked to primary PCU (ID programmed) via tether cable
	N/A	CU is linked via tether cable to PCU (**ID not programmed**)
		ID Programming initiated. See section 4.6 for details
		ID Programming Blocked; reset power on CU and Download ID again. See section 4.6 for details

3.6.2 Error Indicators

The Central Unit will indicate detected errors via the internal double 7-segment LED display. If the Central Unit detects an error it will be indicated by the STATUS LED flashing red; while the Internal LED Display indicates the error code. The digits "Er" are flashed, followed by two blocks with the corresponding error code.

Example of an error code sequence:

Repeated 3 times

The example above would indicate that there is a Short Circuit on PWM Output 1A

The error code sequence will repeat itself three times if the error is considered a soft error and reboot to standby mode to try and clear the error. If the error is considered a hard error the error code sequence will repeat until the power is disconnected.

Below is a list of error codes and their meaning:

Block 2	Block 3	Description	Cause	Action
01	01	EEPROM Failure	Incorrect checksum on EEPROM, last stored data will be set.	Reset system, if persistent; Re-load application program.
01	02	Flash Memory Failure	Incorrect checksum on flash memory.	Reset system, if persistent; Re-load application program.
01	03	Stack Memory Failure	Incorrect sizes of data in CANopen protocol, incorrect dataflow or stack overflow.	System will self reset automatically. If persistent; Re-load application program.
01	04	RAM memory failure	Incorrect RAM and/or hardware identification.	System will self reset automatically. If persistent; Re-load application program.
02	01	Illegal voltage DV-output	DV-output (DV+) externally supplied System will self reset.	Check DV-output connection. Remove terminal connector and reset system.
02	02	Short circuit DV-output	DV-output error; DV output (DV+) short circuited or overloaded.	System will self reset. Check DV-output connection. Remove terminal connector and reset system.
02	03	Safety switch error	Safety switch output read back error, incorrect voltage (High instead of Low).	System will self reset. Remove all terminal connectors and reset system.
02	04	Safety switch error	Safety switch output read back error, incorrect voltage (Low instead of High).	System will self reset. Remove all terminal connectors and reset system.
02	05	CAN Safety loop error	Incorrect status of CAN safety loop.	System will self reset. Check CAN safety loop connection. Reset system.
03	00	Illegal voltage Digital output	Digital output (1-14) illegal voltage, expected low signal but read as high (could be any of the available 14).	System will self reset. Check digital output connections. Remove terminal connector and reset system.
04	00	Short circuit; Digital output	Digital output (1-14) short circuited or overloaded (could be any of the available 14 outputs).	System will self reset. Check digital output connections. Remove terminal connector and reset system.
05	00	Error input triggered (Danfoss CU only)	Error signal for Danfoss valve triggered (Could be any of the available 8 inputs)	System will self reset. Check analog output connections. Remove terminal connector and reset system.
06	xx	Illegal voltage Analog output	Wrong voltage on analog output (**Block 3** declares related output; 1A,1B....).	System will self reset. Check analog output connections. Remove terminal connector and reset system.

3.6.2 Error Indicators (cont'd...)

Block 2	Block 3	Description	Cause	Action
07	xx	Illegal voltage Analog output	Wrong current on analog output (**Block 3** declares related output; 1A,1B....).	System will self reset. Check connections. Remove terminal connector and reset system.
08	01	CAN Passive	CAN bus in passive mode.	System will self reset. Check CAN connections. Check other nodes on bus and reset system.
08	02	CAN I/O buffer overflow	CAN overrun; either the CAN input or CAN output buffer are full.	System will self reset. Reset system, re-initiate via CAN controller.
08	03	CAN physical layer error	Bad communication/transmission.	System will self reset. Check CAN connections. Check other nodes on bus and reset system.
08	04	CAN PDO length exceeded	PDO length is to long.	System will self reset. Reset system, re-initiate via CAN controller.
08	05	CAN PDO length error	PDO length is too short.	System will self reset. Reset system, re-initiate via CAN controller.
08	06	CAN Transmit COB-ID collision	To many collisions on CANbus.	System will self reset. Check CAN connections. Check other nodes on bus and reset system, re-initiate via CAN controller.
10	N/A	PCU failure; E-Stop	Error transmitted from PCU: Illegal signal from PCU emergency stop switch.	System will self reset. Check emergency stop switch on PCU.
11	N/A	PCU failure; Analog input	Error transmitted from PCU: Analog input active on start-up.	System will self reset. Ensure all analogue inputs on PCU are at zero/ neutral position. Restart PCU.
13	N/A	PCU failure; Analog input	Error transmitted from PCU: Signal redundancy test; illegal signal from analog input.	System will self reset. Diagnose PCU via TEST MODE.
14	01	ID programming failure	ID-code and/or parameter settings not accepted.	System will self reset. Retry ID-programming procedure.
14	02	Program failure	Programmable logic parameter error.	System will self reset. Reset application program.
15	xx	PWM output failure	Analog output short circuited or overloaded. (**Block 3** declares related output; 1A,1B....).	System will self reset. Check analog output connections. Remove terminal connector and reset system.
16	xx	PWM output failure	Analogue output not connected (programmable feature). (**Block 3** declares related output; 1A,1B....).	System will self reset. Check analog output connections. Remove terminal connector and reset system.
17	01	Low supply power	Low power supply (Below 8.5 VDC).	System will self reset. Check power supply and supply connections.
17	02	High supply power	High power supply (Above 36 VDC).	System will self reset. Check power supply and supply connections.

4 PCU

4.1 Mini Switch and Joystick Layout

Switch Legend

L	Latched or Detent
M	Momentary or Spring return
POT	Uni-Directional Potentiometer (0-10)

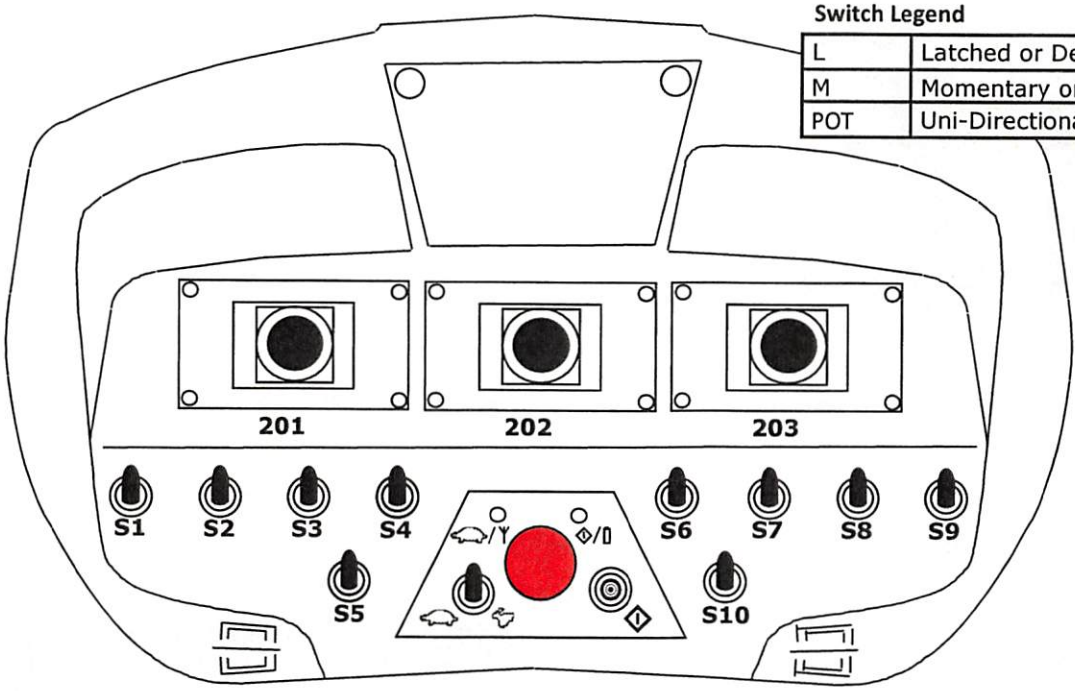

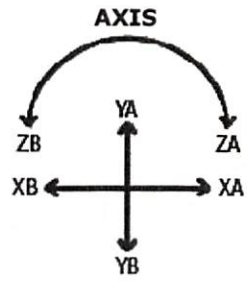

Paddles

Axis	Function in (A) Direction	Function in (B) Direction
P1	Jib Down/Pole Guide Close	Jib Up/Pole Guide Open
P2	Auger/Winch Down	Auger/Winch Up
P3	Boom CW	Boom CCW
P4	Boom 2 Out	Boom 2 In
P5	Boom 3 Out	Boom 3 In
P6	Boom Down	Boom Up

Switches

Position	Axis	Function A		Center	Function B	
		Type	Name		Type	Name
S1	Y	M	Boom Enable	N/A		
S2	Y	L	Pole Claw Tilt ON	N/A	L	Pole Claw Tilt OFF
S3						
S4	Y	M	Engine Start	OFF	M	Engine Stop
S5						
S6	Y	M	RPM High	OFF	M	RPM Low
S7						
S8						
S9	Y	L	Boom Enable	N/A	L	LINK
S10	Y	M	Tool Circuit On	OFF	M	Tool Circuit On

4.2 Power / Stop / Micro Speed Switch Panel

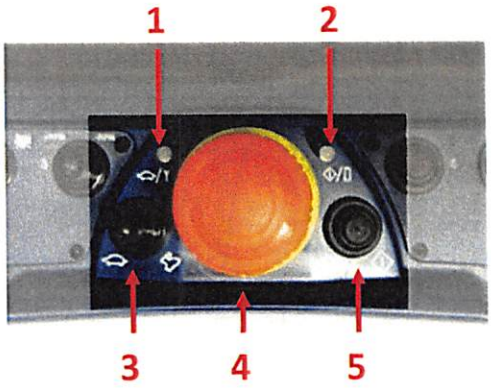

No	Description
1	Micro Speed (Green) / RF Indicator (Red) LED
2	Power ON / Low Battery LED
3	Micro Speed Switch
4	Stop Function Mushroom Button; twist to reset
5	Power / Function Button

The above figure and table detail the layout of a **Maxi** generic Power / Stop / Micro Speed Switch panel. **Mini** switch panels are very similar in layout with the same functionality. Indicators and switch functions are detailed in the sections below.

4.3 PCU Battery and Charging

- Each Battery needs to be fully charged before use. Connect charger to 10-32 VDC or 120 VAC depending on type supplied.
- PCU battery compartment is located in the bottom of the PCU housing. Batteries are keyed to ensure correct orientation.

- Ensure terminals are clean and free from debris before installation of a battery
- A new fully charged battery will last approximately 8 hours on a charge. Extremely cold conditions can reduce battery performance.
- PCU's are typically programmed with a 5 minute inactivity timeout as a battery saving feature; turning off the PCU after X minutes of paddle / joystick inactivity. This is a configurable feature that can be adjusted or removed as requested.

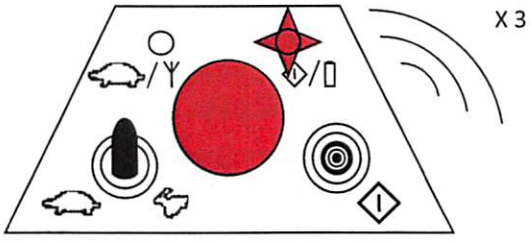

Low Battery is indicated on the PCU when the internal Buzzer beeps 3 times and the Power ON / Low Battery LED flashed Red.

4.4 Powering the PCU

A.

Install charged battery or connect tether cable

B.

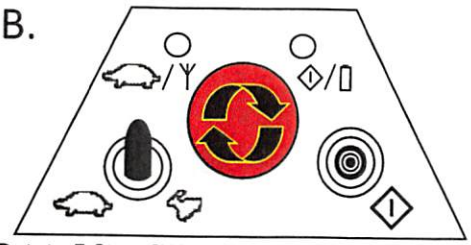

Rotate E-Stop CW

C.

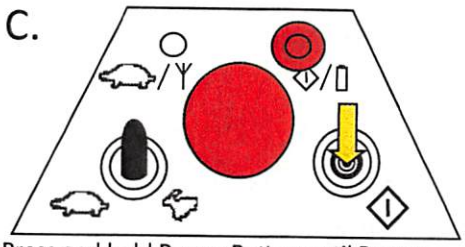

Press and hold Power Button until Power ON LED will illuminates solid RED

D.

Note: If no link is established the RF indicator LED will flash RED 4 times then turn off. Continue to Section 4.6 Downloading ID: Pairing PCU and CU.

Tether Note: Tether connection has priority over RF transmission, if a tether link is present between the PCU and CU the radio will be disabled and battery will be charged (if installed). The PCU inactivity timeout will also be disabled when connected via tether cable.

4.5 Micro Switch Operation

The Micro Speed Switch can be programmed to reduce the maximum speed of any Proportional Paddle / Joystick outputs. Typically in five (5) steps as indicated in the table below. The number of steps and percentage of reductions is adjustable.

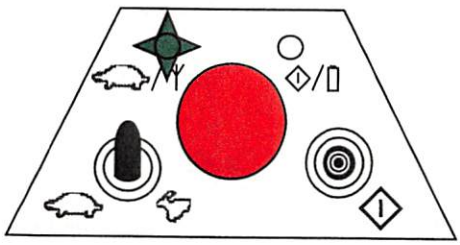

Micro / RF LED Green	Indication
not lit	0 to 100 % speed (normal speed)
1 blink every third second	0 to 60 % speed
2 blink every third second	0 to 50 % speed
3 blink every third second	0 to 40 % speed
4 blink every third second	0 to 30 % speed
5 blink every third second	0 to 20 % speed

Pressing the Micro Speed switch to the Turtle position will decrease the proportional outputs by one step in the above table.

Pressing the Micro Speed switch to the Rabbit position will return the proportional outputs to 100% operation.

- For safety reasons, a return to 100% steering can only be made if all Paddles / Joysticks are in their center positions.
- When the green LED is blinking, the Micro-speed function is activated. The number of blinks indicates the operating speed as defined in the table above. If the Stop Function is pressed on the PCU, the PCU will start from the last chosen speed.

4.6 Downloading ID: Pairing PCU and CU

Programs the unique ID-code required for radio communication between the Portable Control Unit and Central Unit. Typically the CU may store a maximum of 1 PCU ID-code. If another PCU is required to operate the CU via radio, the ID-code procedure is required to be done and the previous ID-code will be overwritten.

A.

Remove battery from PCU and connect tether cable between CU and PCU.

B.

Release E-Stop; Rotate CW

C.

Remote / OFF / Manual Switch

Cycle power on CU -> Toggle switch from OFF (center) to Remote (up) position. *Step D. must be done within 45 seconds of C.*

D.

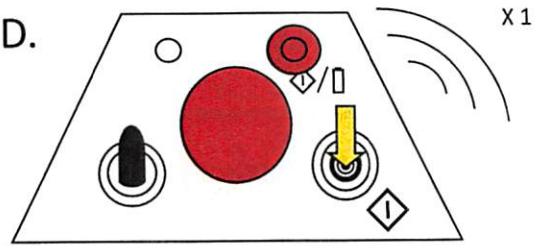

Press and hold Power Button (approx. 10 Seconds) until Power ON LED illuminates solid RED and Buzzer in PCU beeps once.

PCU ID is now being sent to CU.

E.

The PCU will beep in quick succession to confirm programming is completed.

F.

If this procedure does not work, repeat the programming (see items B-E). If it still does not work, contact Scanreco North America.

4.7 Display Features

Home Screen

Battery Level Indicator

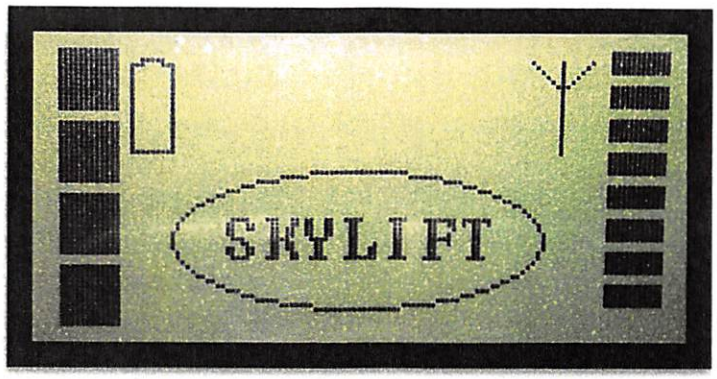

Radio Signal Indicator

Solid bars indicate battery level. The more solid bars the more battery life remaining. Low Battery is still indicated on the PCU when the internal Buzzer beeps 3 times and the Power ON / Low Battery LED flashed Red.

Solid bars indicate radio signal detected. The more solid bars displayed the stronger the signal.

Communication Error

In the event the transmitter and the receiver have lost signal between one another this graphic will be displayed.

Also in the event a switch is not in neutral/off position at start up this is the graphic that is displayed.

Accessory Pins

Pin type	Safety pins
Diameter	5/16"
Overall Length	3-1/16"
Usable Length	2-1/2"
Inside Clearance	1-11/16"
Part#	Pin-105

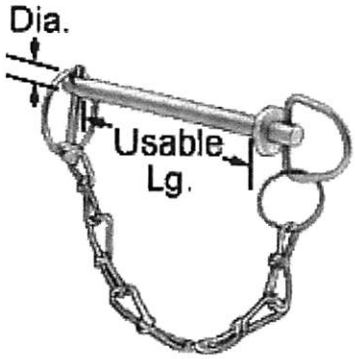

Pin Type	Hitch pin
Diameter	½"
Usable Length	4"
Part#	Pin-107

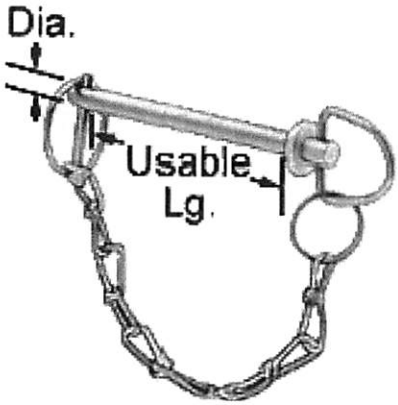

Pin Type	Hitch pin
Diameter	3/4"
Usable Length	4"
Part#	Pin-108

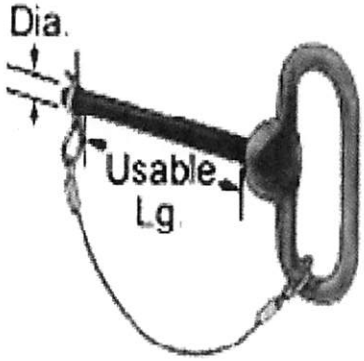

Pin Type	Hitch pin
Diameter	3/4"
Usable Length	6-1/2"
Part#	Pin-109

Photos *and* Installation *of* Accessories

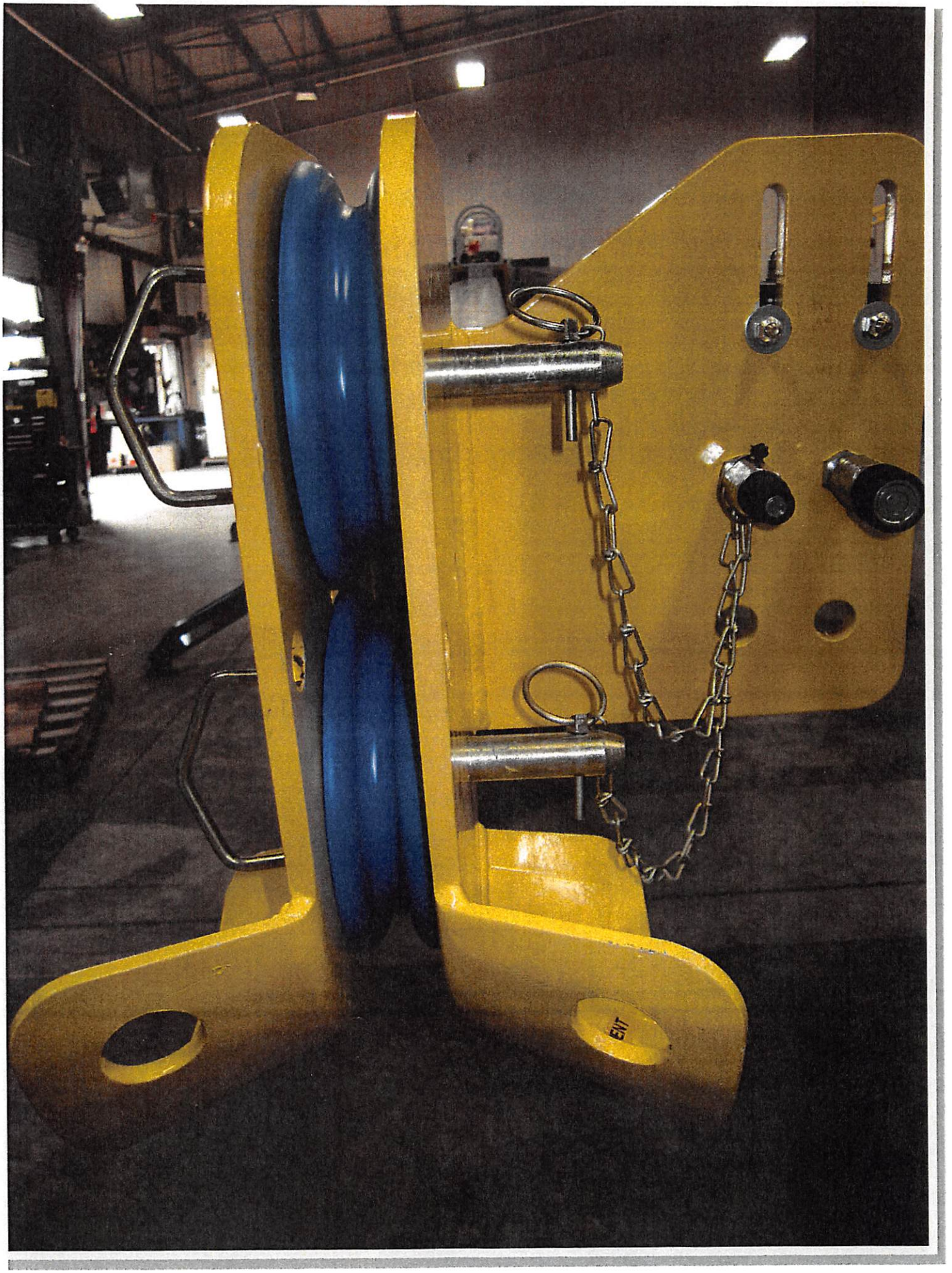
ENT

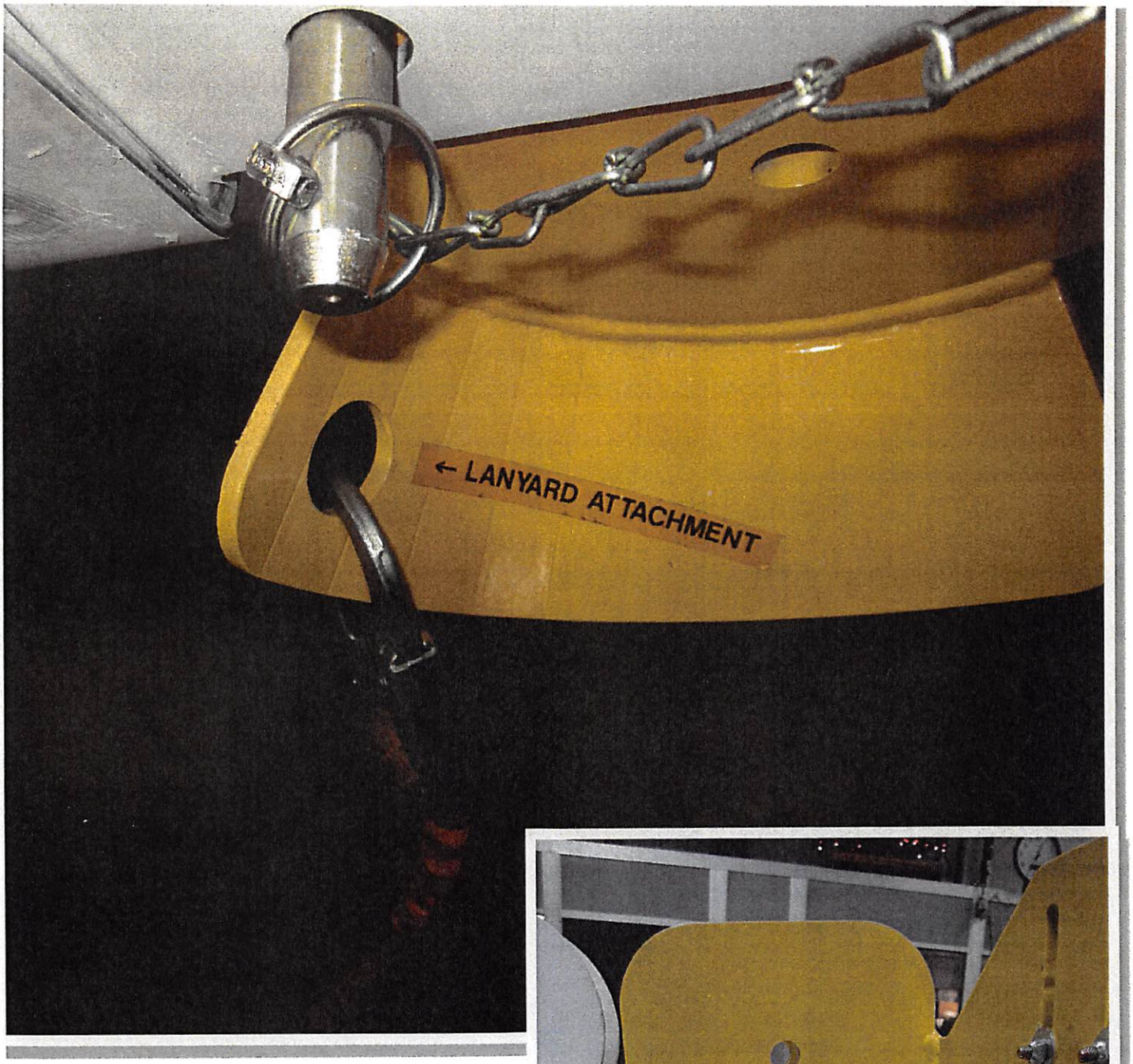
← LANYARD ATTACHMENT

← LANYARD ATTACHMENT

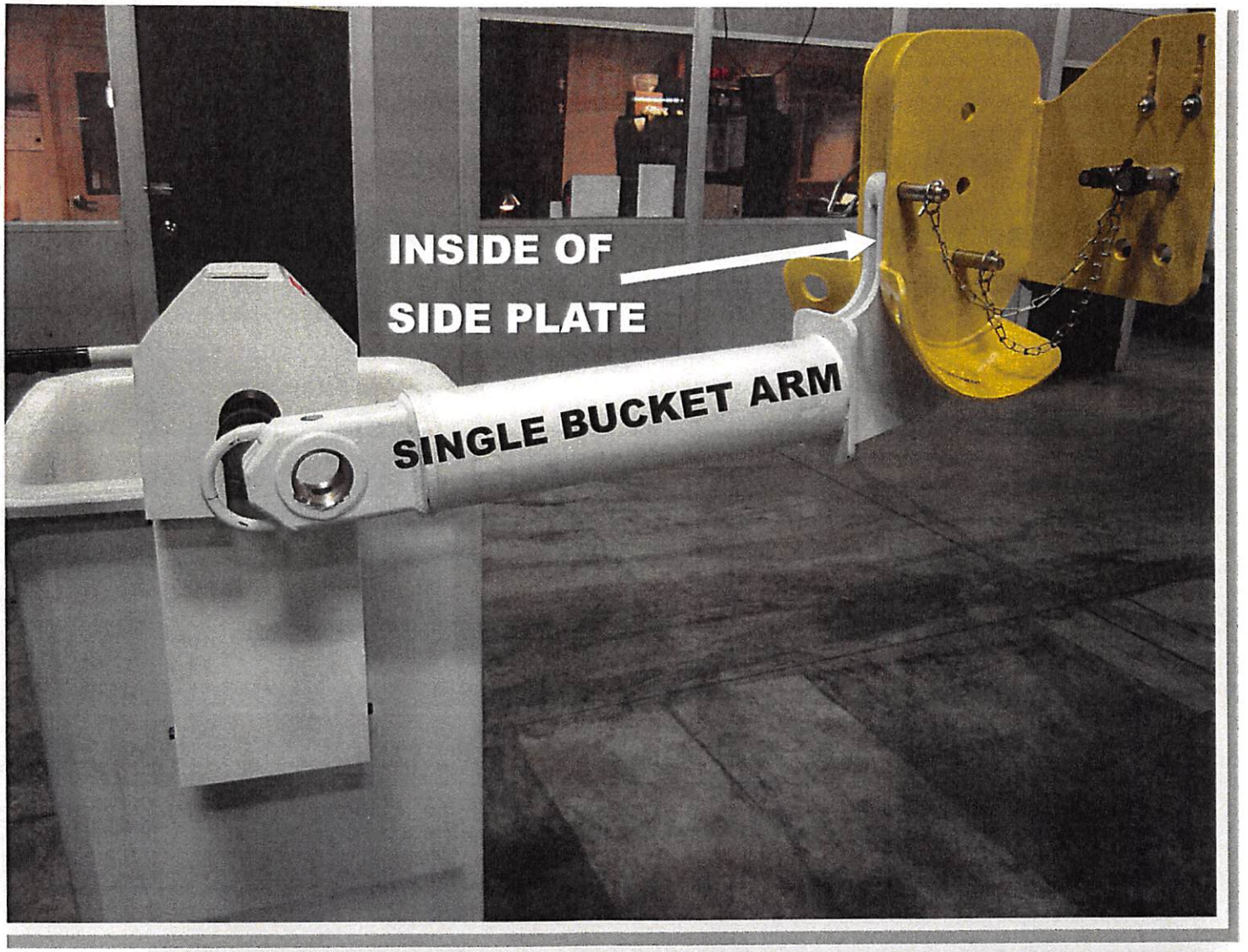
INSIDE OF
SIDE PLATE
SINGLE BUCKET ARM

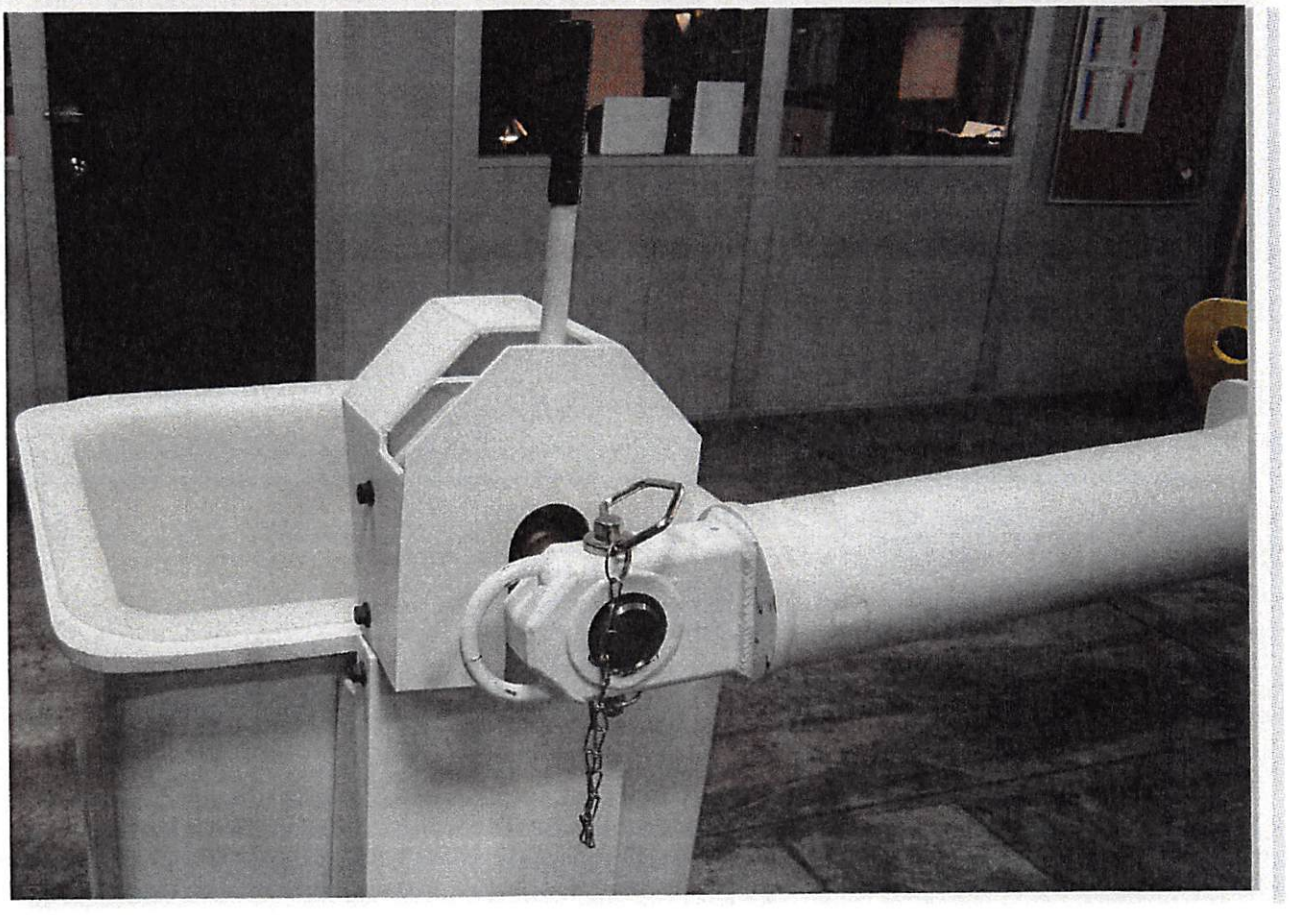

CAN
HANDLER
OUTSIDE OF
SIDE PLATE
LANYARD ATTACHMENT
! CAUTION !
CAN HANDLER
CAN ONLY BE USED WITH
A SINGLE BUCKET!!!

CAN HANDLE
ONLY

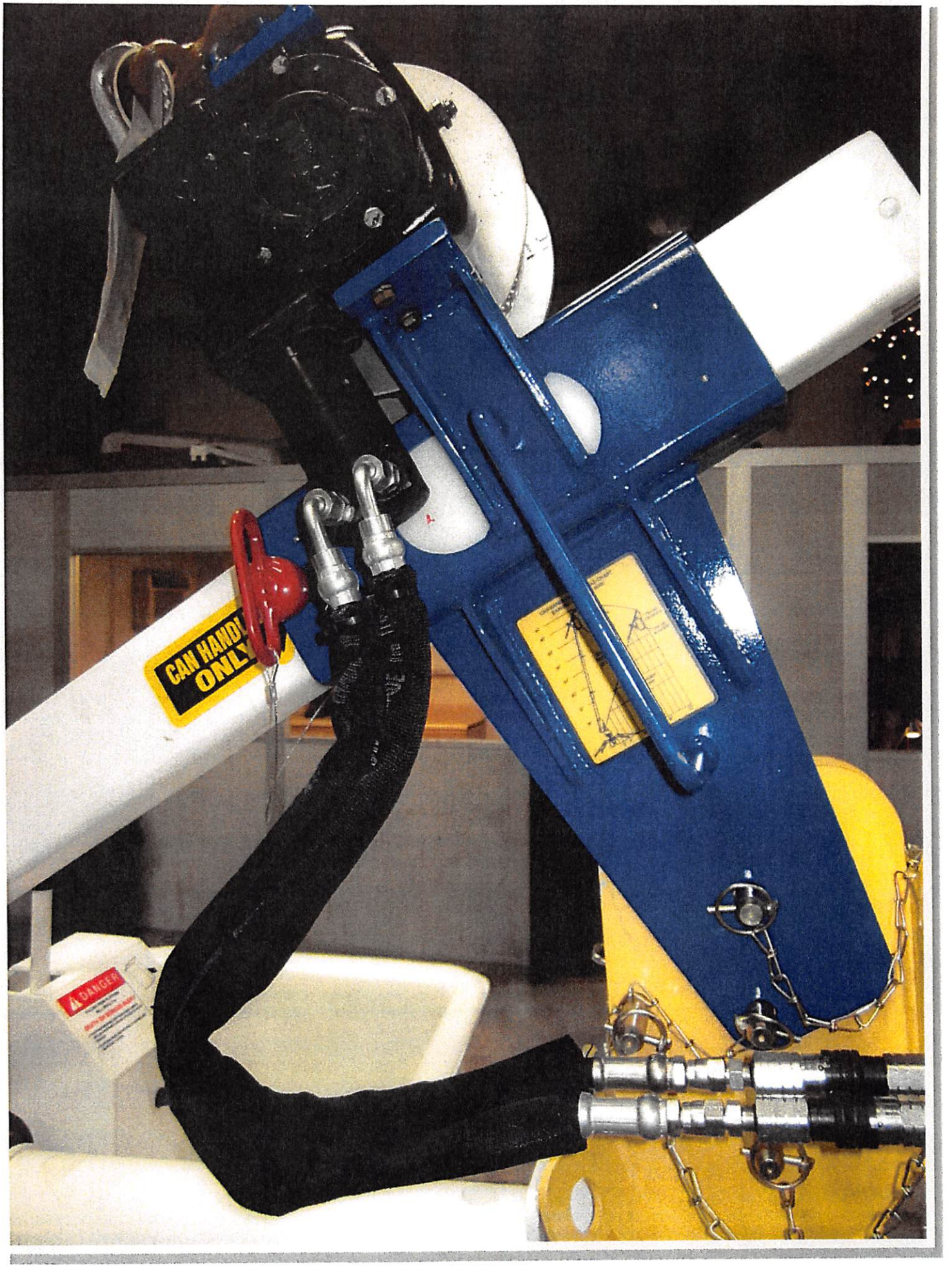
CAN HAND
ONL
DANGER

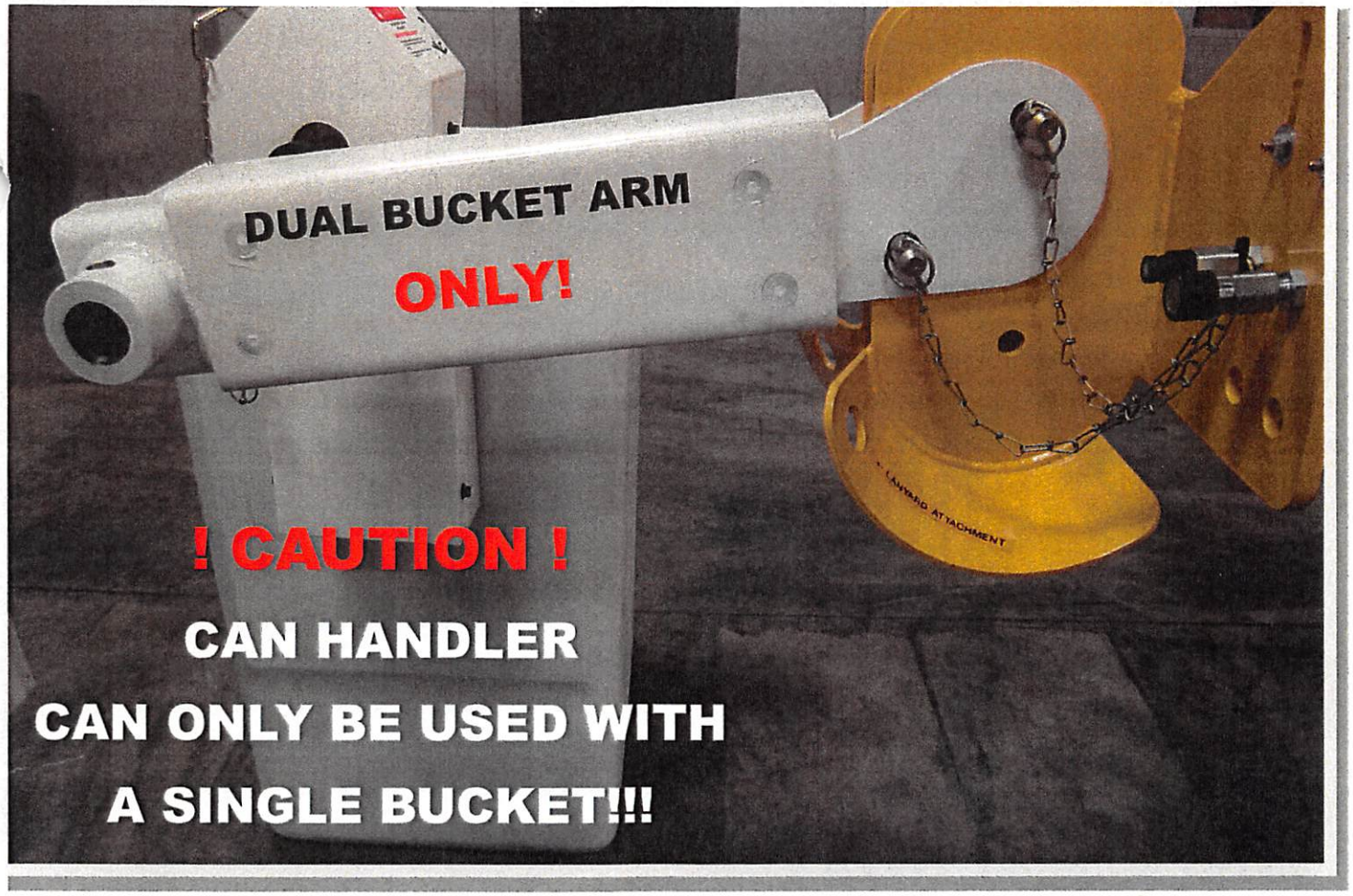
DUAL BUCKET ARM
ONLY!
! CAUTION !
CAN HANDLER
CAN ONLY BE USED WITH
A SINGLE BUCKET!!!

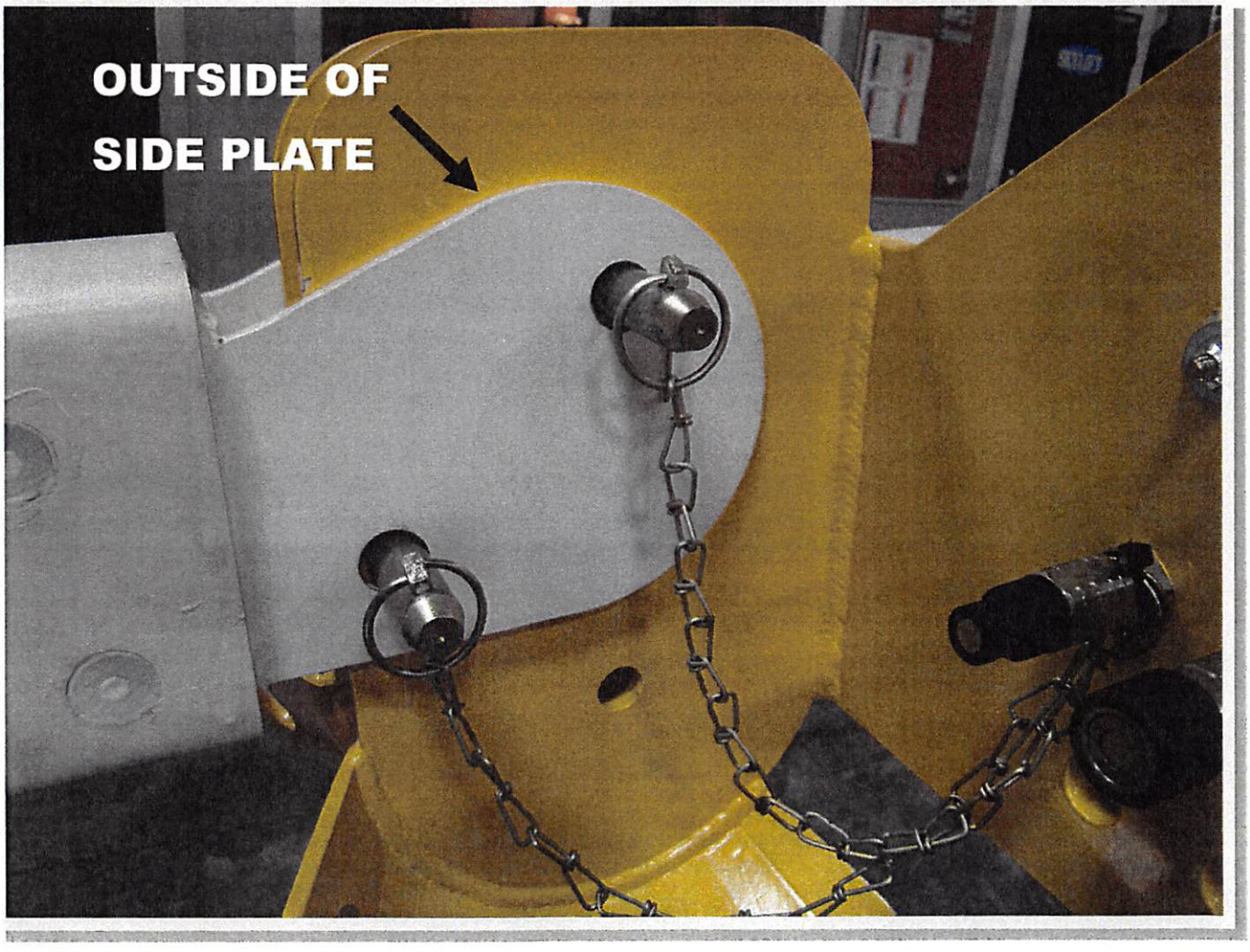
OUTSIDE OF
SIDE PLATE

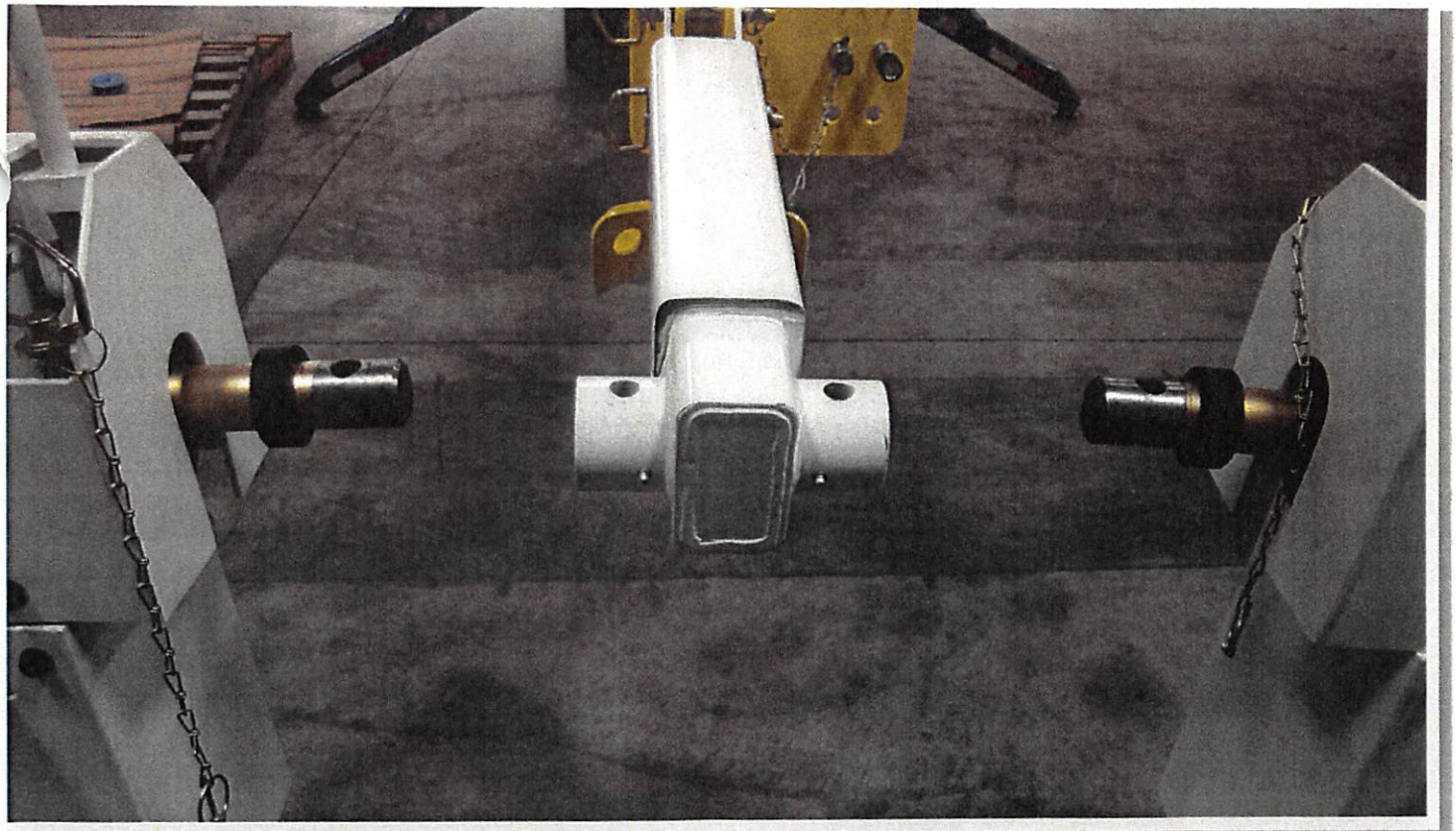

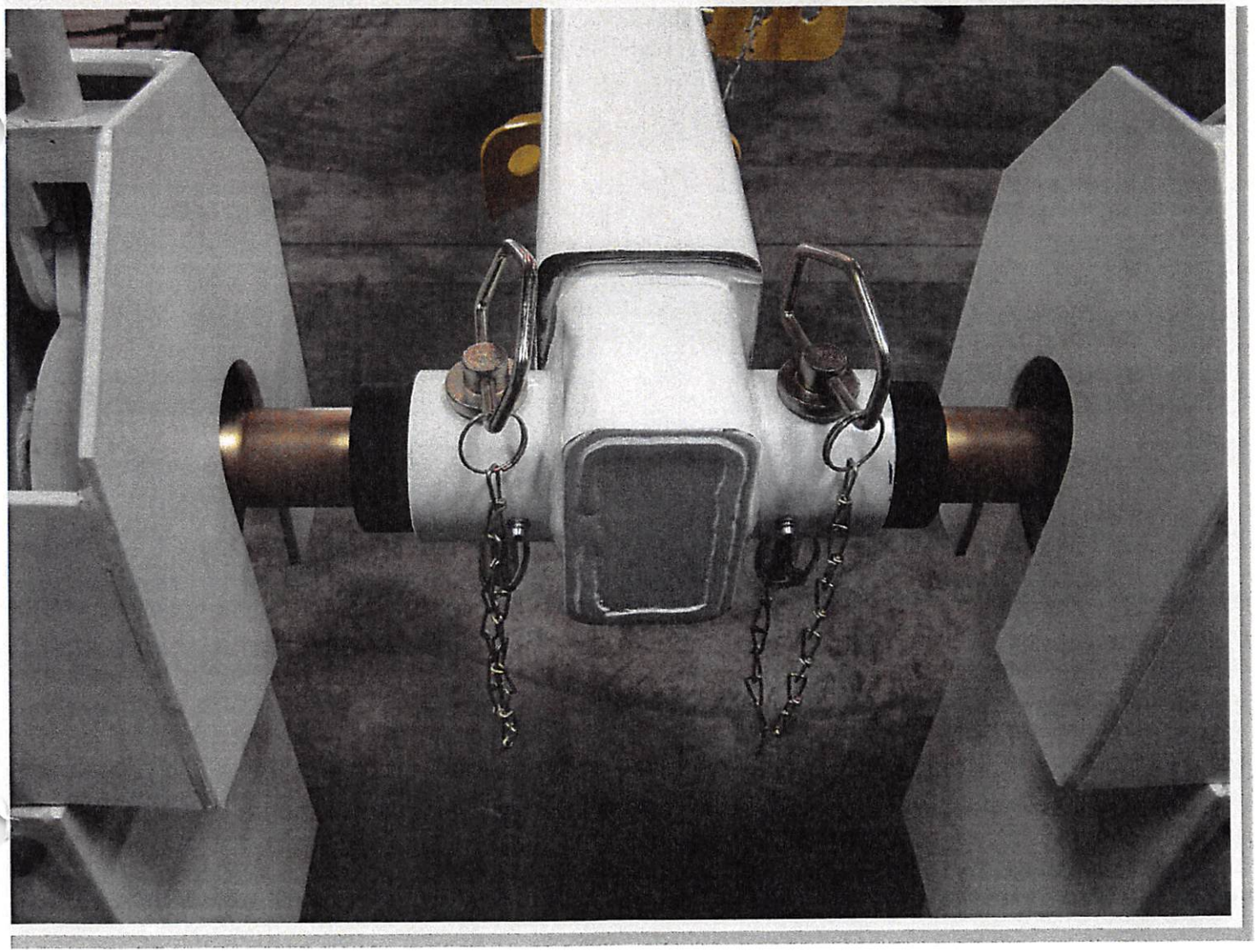

Pole Claws

CAUTION
POLE GUIDE ONLY!
NOT FOR LIFTING
CAUTION
EXTEND
BOOM 1
MIN. 36" FOR
INSULATION
BOOM 1

UTION
GUIDE ONLY!
FOR LIFTING

UTION
GUIDE ONLY!
FOR LIFTING

Bucket Hanger

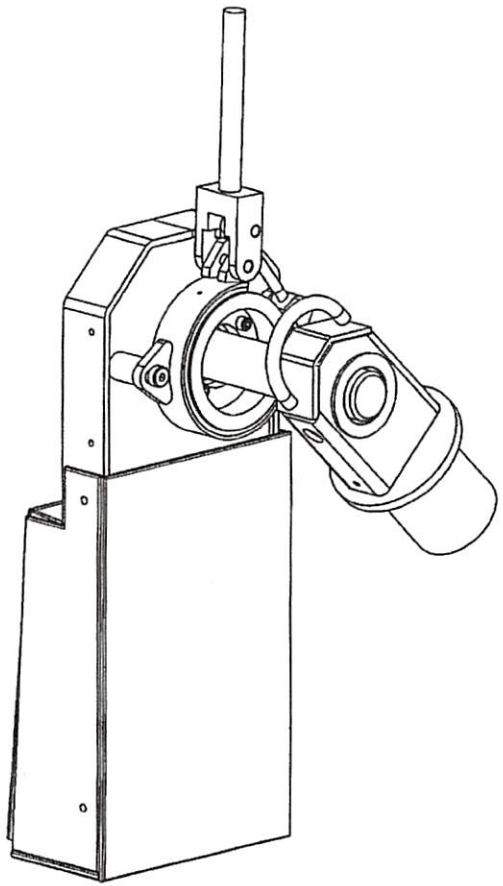

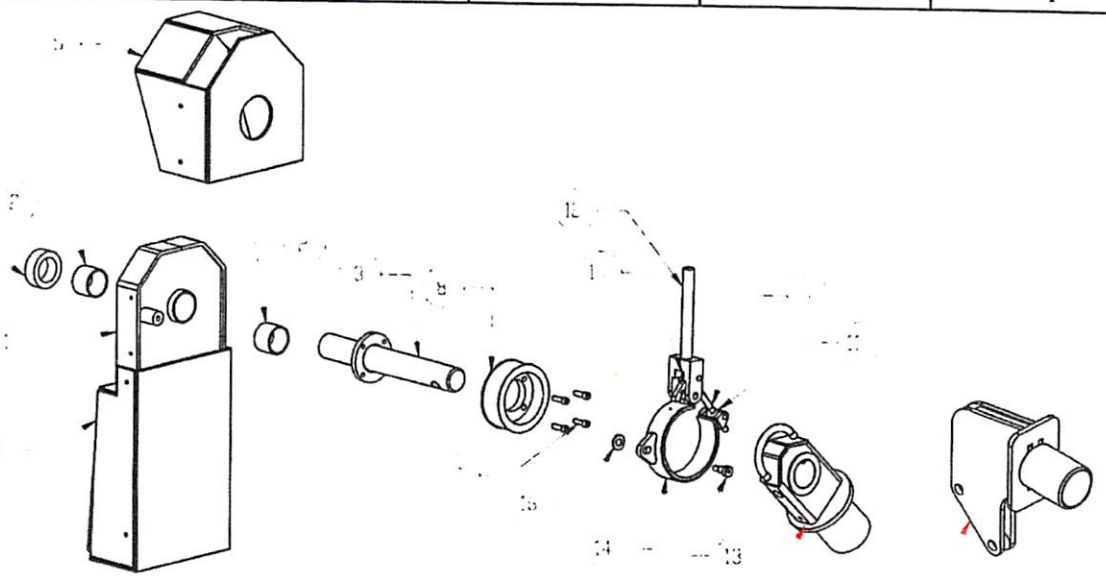

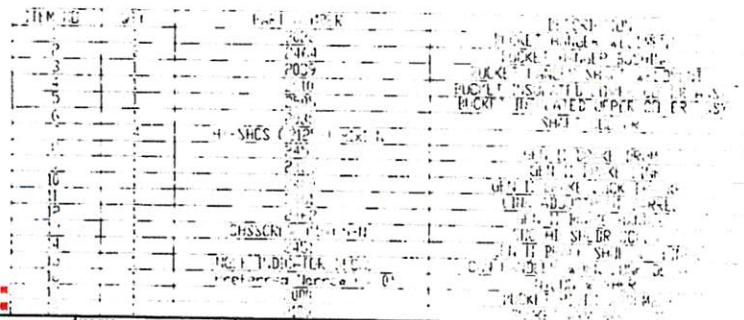

USED ON			UNLESS OTHERWISE SPECIFIED		NAME	DATE	SKYLIFT Inc.
[illegible] DERRICK			DIMENSIONS ARE IN INCHES TOLERANCES: FRACTIONAL ± ANGULAR MACH ± BEND TWO PLACE DECIMAL ± THREE PLACE DECIMAL ±	DRAWN	CMJ	5/7/09	
				CHECKED			TITLE: BUCKET HANGER, GEN II BRAKE
				ENG APPR.			
				MFG APPR.			
			INTERPRET GEOMETRIC TOLERANCING PER:	Q.A.			
			MATERIAL SEE BOM	COMMENTS: 1-12-10 MAJ ADDED ITEMS #17, 18 TO ASSEMBLY.			SIZE B DWG. NO. 2450 REV
NEXT ASSY	USED ON		FINISH N/A				SCALE: 1:4 WEIGHT: SHEET 1 OF 1
APPLICATION			DO NOT SCALE DRAWING				

PROPRIETARY AND CONFIDENTIAL
THE INFORMATION CONTAINED IN THIS DRAWING IS THE SOLE PROPERTY OF <INSERT COMPANY NAME HERE>. ANY REPRODUCTION IN PART OR AS A WHOLE WITHOUT THE WRITTEN PERMISSION OF <INSERT COMPANY NAME HERE> IS PROHIBITED.

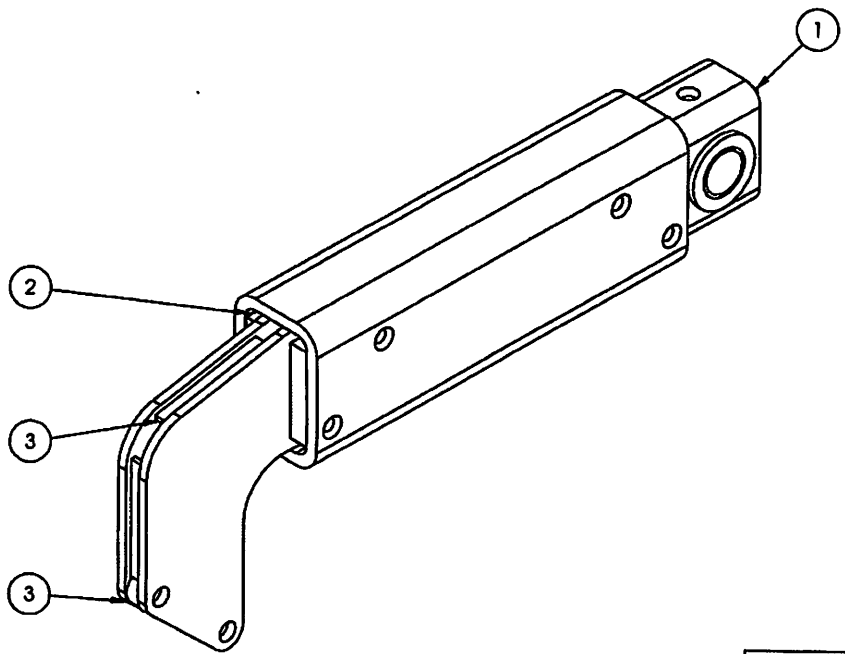

ITEM NO.	PART NUMBER	DESCRIPTION	QTY.
1	3621	SINGLE BUCKET ADAPTER ATTACHMENT	1
2	3570-1	6" X 4" X 1/2" WALL FIBERGLASS TUBING, 18" LONG	1
3	3572	BUCKET ARM BRKT	1

USED ON

SINGLE BUCKET ADAPTER

3621

NEXT ASSY | USED ON

APPLICATION

PROPRIETARY AND CONFIDENTIAL

THE INFORMATION CONTAINED IN THIS DRAWING IS THE SOLE PROPERTY OF <INSERT COMPANY NAME HERE>. ANY REPRODUCTION IN PART OR AS A WHOLE WITHOUT THE WRITTEN PERMISSION OF <INSERT COMPANY NAME HERE> IS PROHIBITED.

UNLESS OTHERWISE SPECIFIED:

DIMENSIONS ARE IN INCHES
TOLERANCES:
FRACTIONAL ± 1/32
ANGULAR: MACH ± 1° BEND ±2°
TWO PLACE DECIMAL ±.010
THREE PLACE DECIMAL ±.005

INTERPRET GEOMETRIC TOLERANCING PER:

MATERIAL

FINISH

DO NOT SCALE DRAWING

	NAME	DATE
DRAWN	MDF	3-22-12
CHECKED		
ENG APPR.		
MFG APPR.		
Q.A.		
COMMENT:		

SKYLIFT Inc.

TITLE: BUCKET ARM BRKT

SIZE	DWG. NO.	REV
B	3622-1	-

SCALE: 1:8 | WEIGHT: | SHEET 1 OF 1

REVISIONS			
REV.	DESCRIPTION	BY	DATE
-	PRELIMINARY	MDF	10-21-11

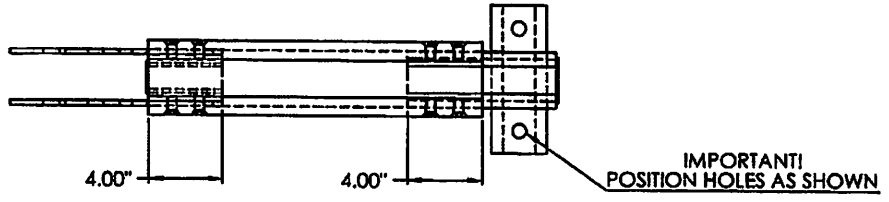

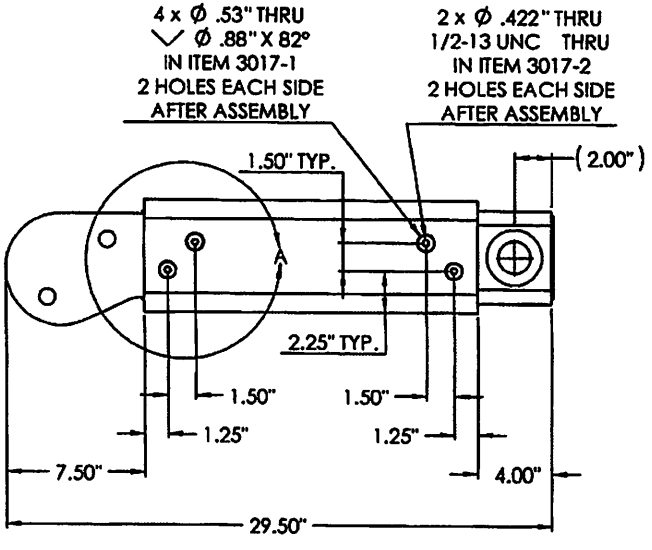

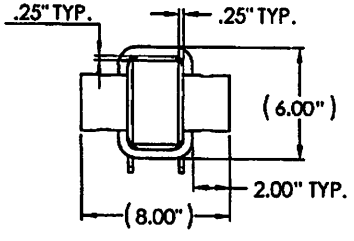

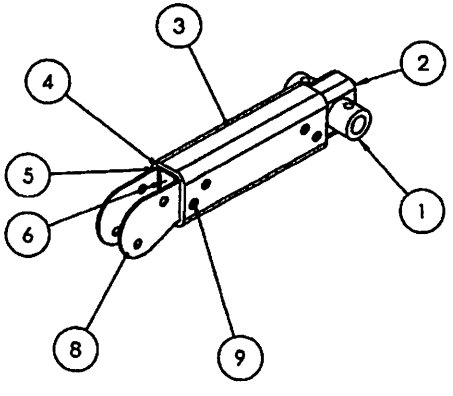

ITEM NO.	PART NUMBER	DESCRIPTION	QTY.
1	3017-1	3" OD X 5/8" WALL A36 STEEL, 8" LONG	1
2	3017-2	5" X 3" X 3/8" WALL A36 STEEL TUBING, 7" LONG	1
3	3017-3	6" X 4" X 1/2" WALL FIBERGLASS TUBING, 18" LONG	1
4	3017-4	5" X 2" X .375" WALL STEEL TUBING	1
5	3017-5	SPACER	2
6	3017-6	CAP	1
7	3017-7	CAP	1
8	3590	DUAL BUCKET SUPPORT BRACKET	2
9	-	1/2"-13 X 1" LONG SOCKET HEAD COUNTERSUNK CAP SCREW	8

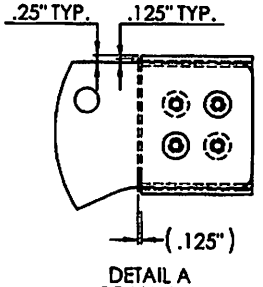

DETAIL A
SCALE 1 : 4

USED ON
MINI DERICK
RANGER
PATRIOT

PROPRIETARY AND CONFIDENTIAL
THE INFORMATION CONTAINED IN THIS DRAWING IS THE SOLE PROPERTY OF SKYLIFT. ANY REPRODUCTION IN PART OR AS A WHOLE WITHOUT THE WRITTEN PERMISSION OF SKYLIFT IS PROHIBITED.

NEXT ASSY	USED ON
APPLICATION	

UNLESS OTHERWISE SPECIFIED:
DIMENSIONS ARE IN INCHES
TOLERANCES:
FRACTIONAL ± 1/32
ANGULAR: MACH ± 1° BEND ±2°
TWO PLACE DECIMAL ±.010
THREE PLACE DECIMAL ±.005
INTERPRET GEOMETRIC TOLERANCING PER:
MATERIAL: SEE BOM
FINISH: N/A
DO NOT SCALE DRAWING

	NAME	DATE
DRAWN	MDF	10-21-11
CHECKED		
ENG APPR.		
MFG APPR.		
Q.A.		

COMMENTS:

SKYLIFT Inc.

TITLE: DUAL BUCKET ADAPTER ASSEMBLY

SIZE	DWG. NO.	REV
B	3017	-

SCALE: 1:6 | WEIGHT: 49 lbs. | SHEET 1 OF 2

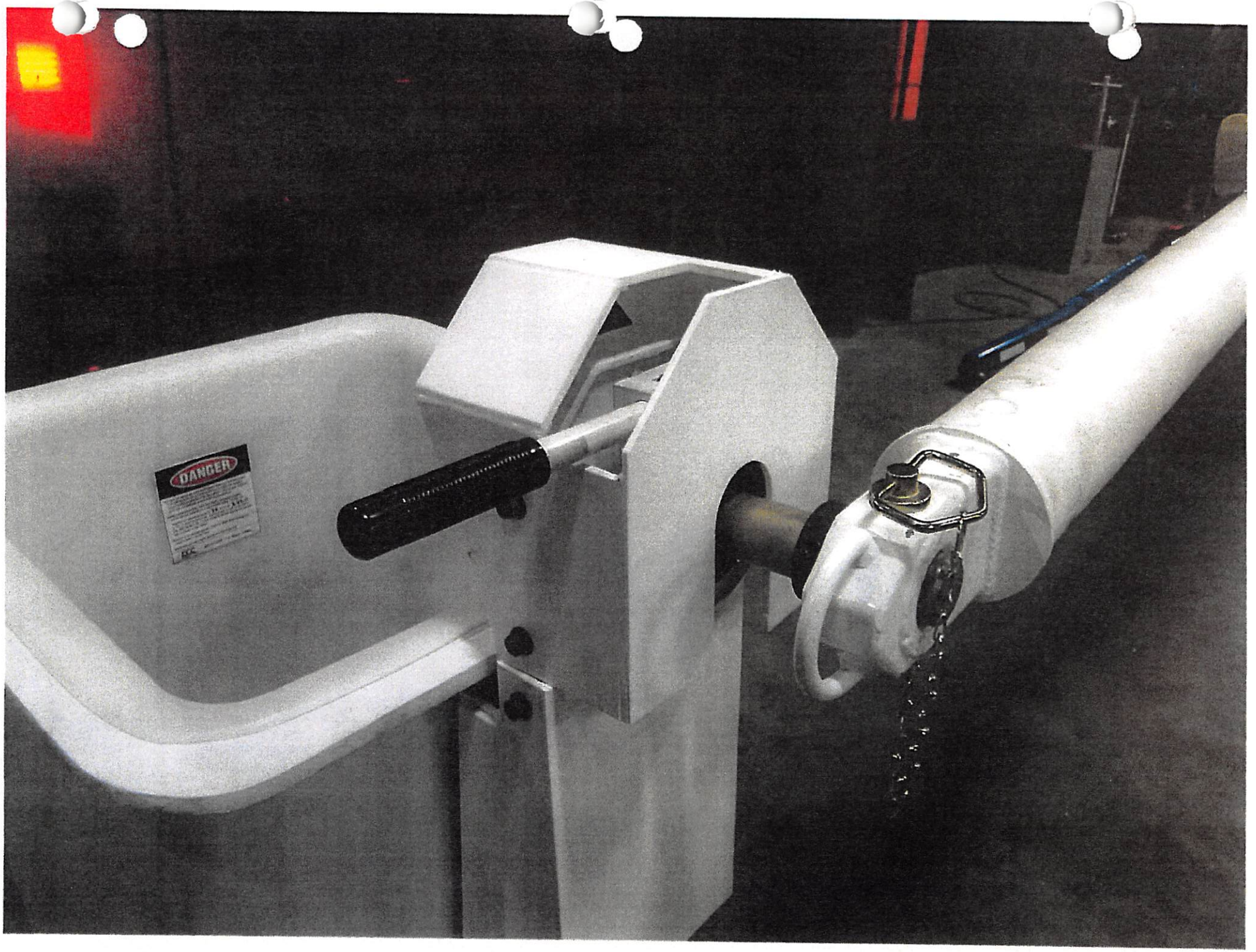
DANGER

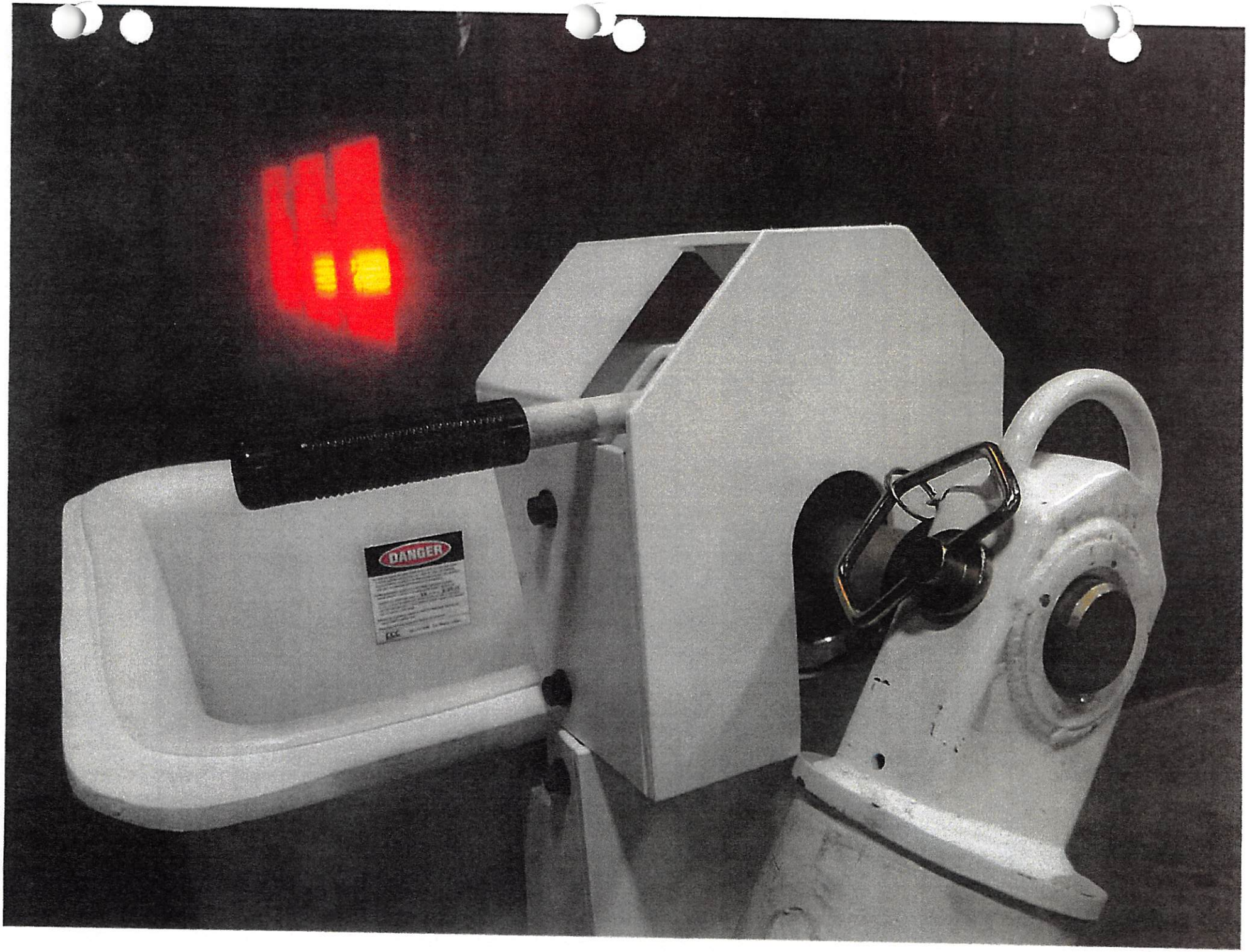
DANGER

Can Handler

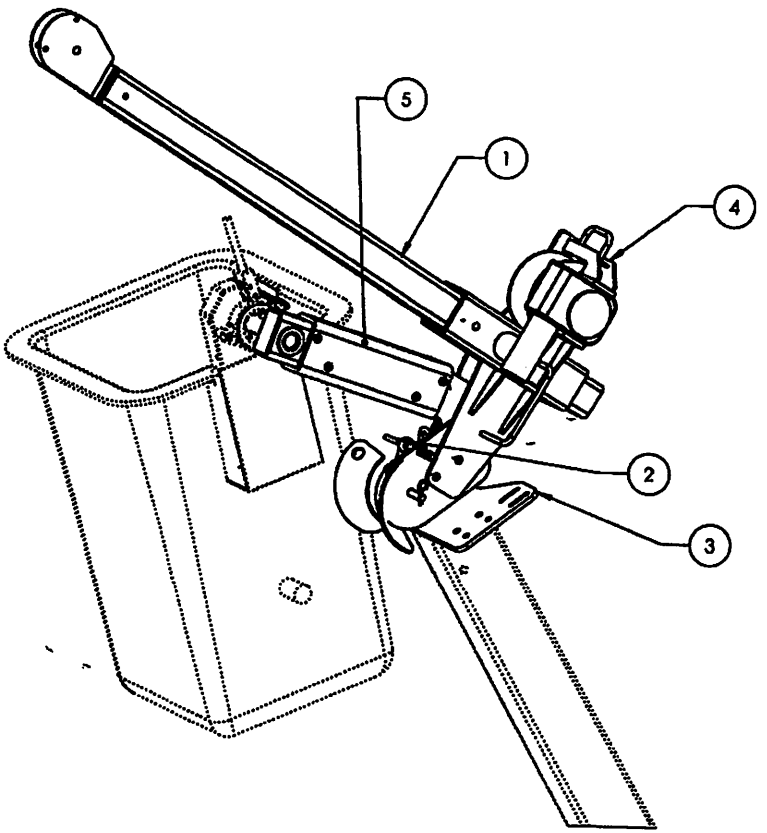

ITEM NO.	QTY.	PART NUMBER	DESCRIPTION
1	1	3577	JIB EXT TUBE
2	5	300-0007	3/4 x 4-1/2 PIN W/COTTER
3	1	2338	SHEAVE HEAD WELDMENT ASSY
4	1	3551	WINCH MOUNT ASSEMBLY
5	2	3570	BUCKET ARM BRKT

USED ON
RANGER 40
SUPER 6000
PATRIOT 40/50

PROPRIETARY AND CONFIDENTIAL
THE INFORMATION CONTAINED IN THIS DRAWING IS THE SOLE PROPERTY OF <INSERT COMPANY NAME HERE>. ANY REPRODUCTION IN PART OR AS A WHOLE WITHOUT THE WRITTEN PERMISSION OF <INSERT COMPANY NAME HERE> IS PROHIBITED.

NEXT ASSY	USED ON
APPLICATION	

UNLESS OTHERWISE SPECIFIED:
DIMENSIONS ARE IN INCHES
TOLERANCES:
FRACTIONALS
ANGULAR: MACH ± BEND ±
TWO PLACE DECIMAL ±
THREE PLACE DECIMAL ±
INTERPRET GEOMETRIC TOLERANCING PER:
MATERIAL: SEE BOM
FINISH: N/A
DO NOT SCALE DRAWING

	NAME	DATE
DRAWN	CMJ	6/5/09
CHECKED		
ENG APPR.		
MFG APPR.		
Q.A.		

COMMENTS:

SKYLIFT Inc.

TITLE: CAN HANDLER ASSEMBLY

SIZE	DWG. NO.	REV
B	3550	

SCALE: 1:12 WEIGHT: SHEET 1 OF 1

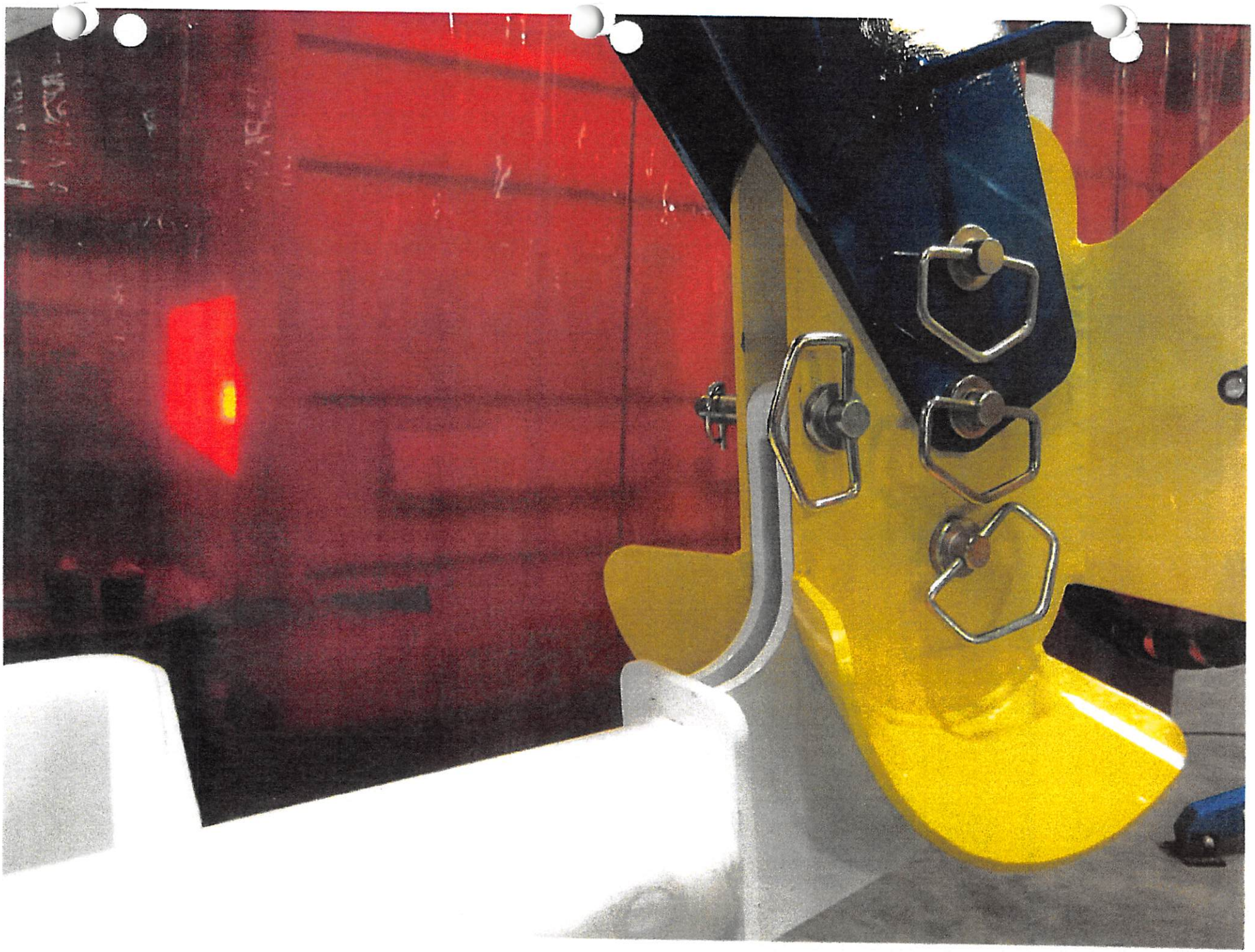

Material Handling Jib

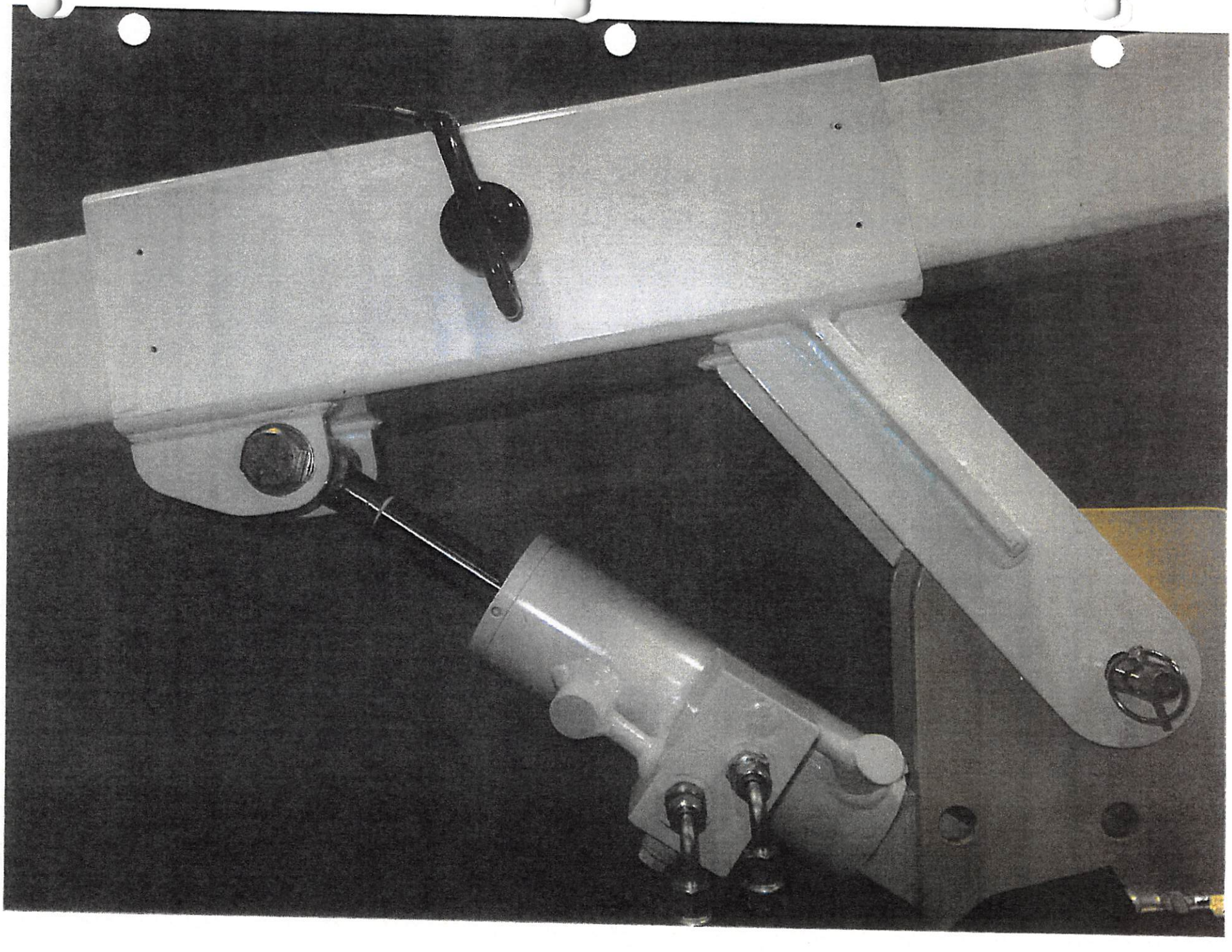

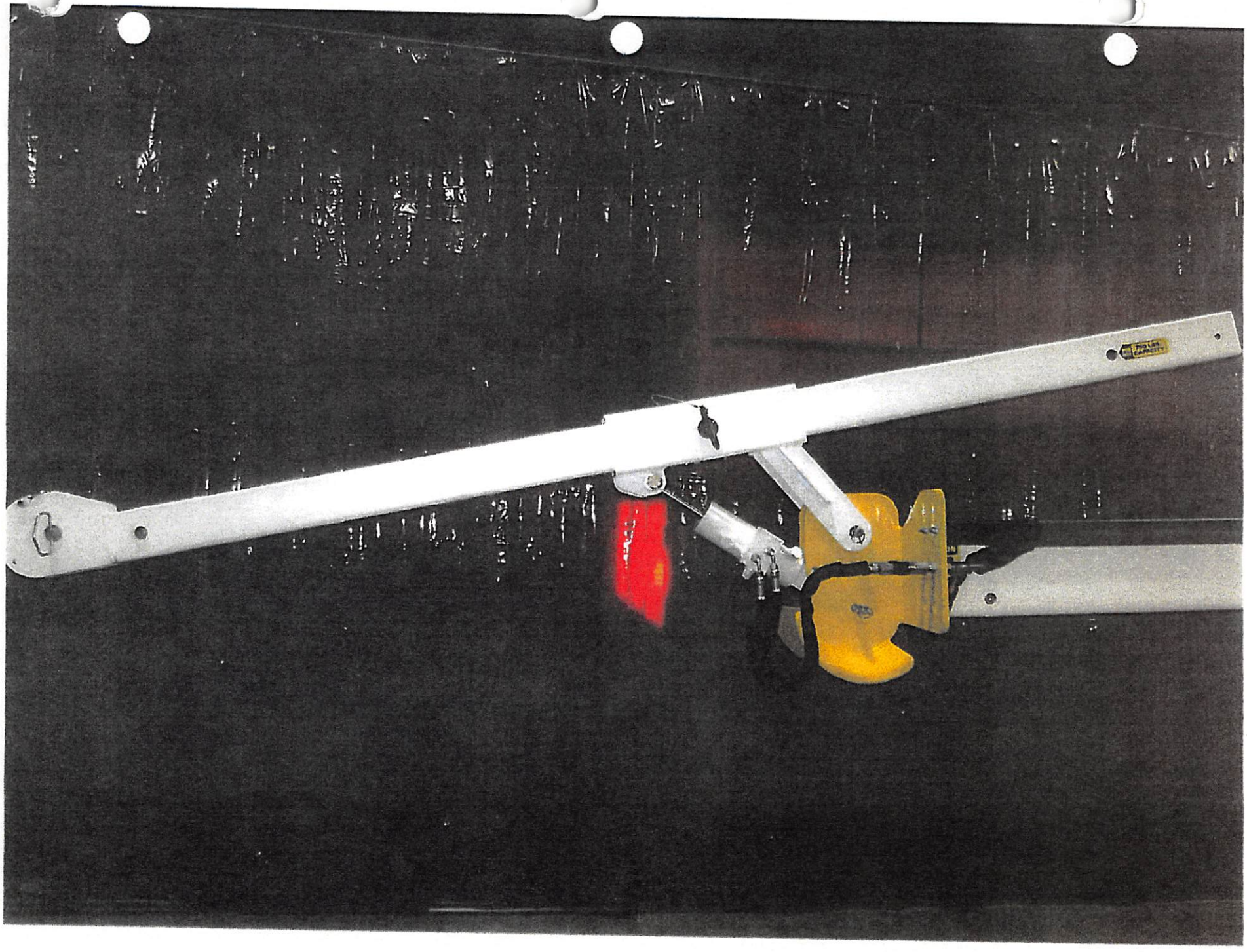

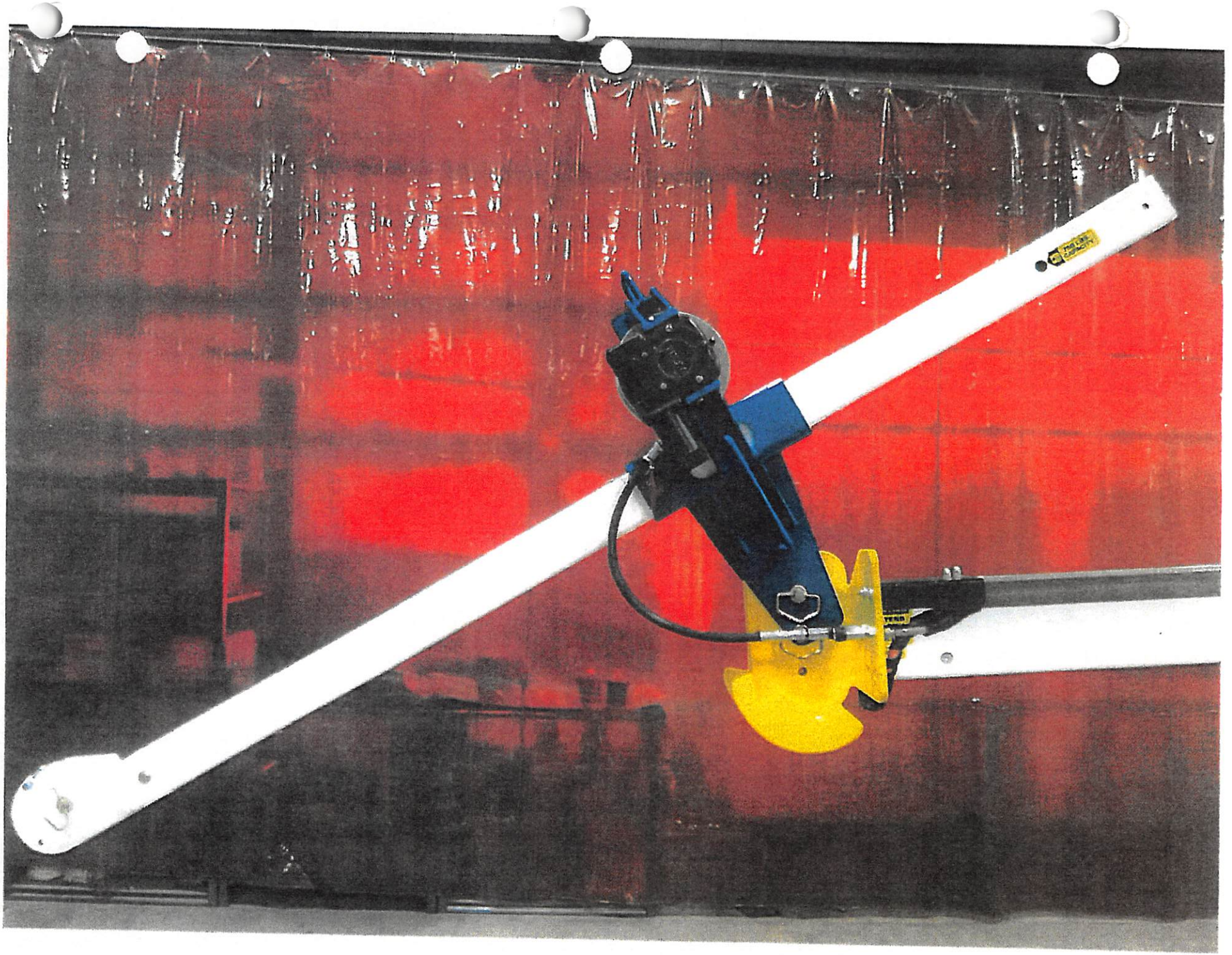

WORK LIGHTS

1400 Lumen Gen3 LED Work Light

5" Rectangle:

#EWLC14ØØTBDFØW Flood Pattern
#EWLC14ØØTBDSØW Spot Pattern
#EWLC14ØØTBDTØW Trapezoid Pattern

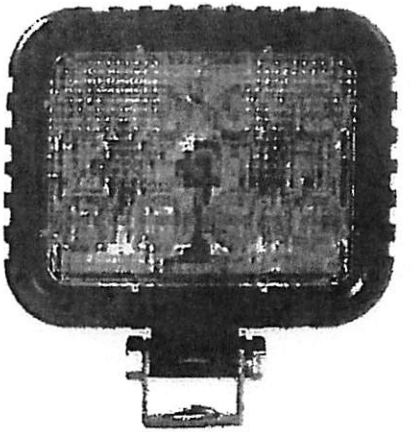

- ***Intense & bright LED Work Light*** is built for the most demanding environments
- ***Corrosive resistant materials*** including high tech plastics, aluminum housing & stainless steel bracket
- ***Light is certified to IP67 specifications*** for rigorous dust & water immersion testing - heavy duty design withstands & outlasts harsh environmental conditions
- ***Waterproof O-ring sealed design***
- ***10 - 50 Vdc input*** voltage range for use on many types of vehicles around the world
- ***Premium optics*** maximize the LED light output
- ***Rated to last 30,000+ hours*** for a long-lasting & reliable, bright white light source to illuminate your work/play areas
- ***Adjustable Mounting Bracket*** with 180° of tilt forward or backward to aim the light as needed
- ***Low maintenance & reduced operating costs*** - no more broken or burned out bulbs

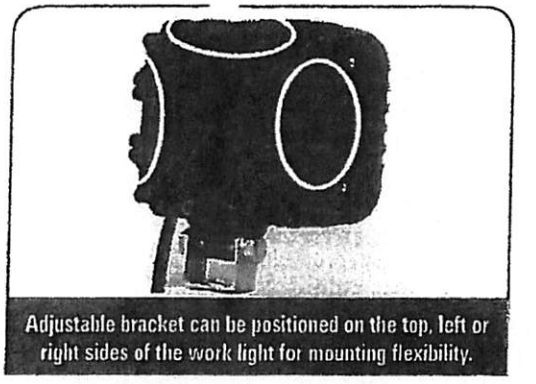

Adjustable bracket can be positioned on the top, left or right sides of the work light for mounting flexibility.

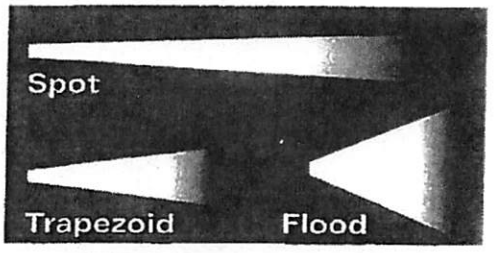

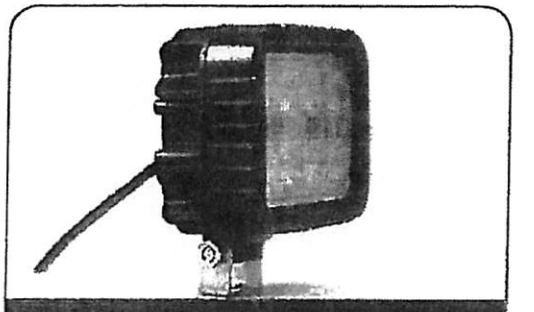

Made with corrosive resistant materials including high tech plastics, aluminum housing & stainless steel bracket.

Tech Specs	1400 Lumen Work Light
Illumination Patterns:	Flood (40° Horiz. x 25° Vert.), Spot (10°) or Trapezoid (40° Horiz. x 15° Vert.)
Color Temp.:	5700k
Light Sync:	No
Technology:	8 Gen3 LEDs
Mounting:	Surface Mount with provided U-bracket
Input Voltage:	10 - 50 Vdc for worldwide use
Current Draw:	3.7 amps @ 12.8 Vdc 1.8 amps @ 25.6 Vdc 0.9 amps @ 51.2 Vdc
Dimensions:	Width x Height x Depth 5" (13 cm) W x 4" (10 cm) H x 2.6" (66 mm) D Overall Height: 5.5" (14 cm) incl. bracket
Operating Temp.:	-40° to +65° C / -104° to +149° F

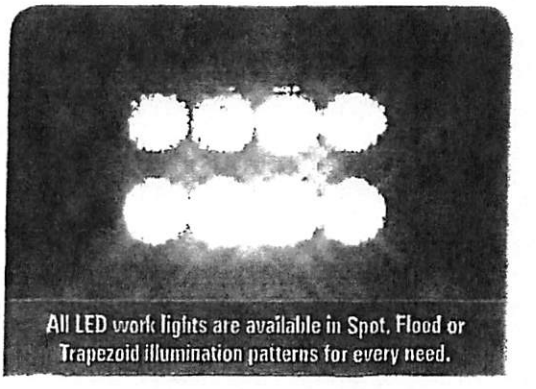

All LED work lights are available in Spot, Flood or Trapezoid illumination patterns for every need.

REPLACEMENT PARTS LIST
SERIAL NO. 1089000 AND UP

P/N 68801

ORDERING INFORMATION:
When ordering please give Warn Model, Serial Number & Battery voltage.
Part may be obtained through your local dealer or distributor.

ITEM	QTY	PART NO	DESCRIPTION
1	1	68771	GEAR HOUSING
2	1	32437	SUN GEAR, 12 TOOTH
3	1	61739	CARRIER ASSEMBLY, STAGE 1
4	1	61738	CARRIER ASSEMBLY, STAGE 2
5	1	68769	RING GEAR, OUTPUT STAGE
6	1	65933	CARRIER ASSEMBLY, STAGE 3
7	1	67970	SHAFT,DRIVE,12.023 X .312
8	2	16336	DRUM BUSHING NYLON
9	2	17150	S/P RADIAL OIL SEAL
10	6	60451	BOLT,SHCS, 5/16-18 x 1-1/4F THREAD CUT
11	1	68770	DRUM SUPPORT, GEAR TRAIN END (Includes item: 8,and 9)
12	2	14964	GASKET
12A	10	15603	CAPSCREWS, 1/4-20X3"
13	2	13826	THRUST WASHER, NYLON
14	1	15466	DRUM ASSEMBLY
15	1	32456	BRAKE ASSEMBLY
15A	3	32408	TIE ROD
16	1	68772	DRUM SUPPORT, MOTOR END
17	1	60730	DRIVER, BRAKE WIDE TANGS
18	1	63533	GASKET,MOTOR
19	1	68773	MOTOR, 12V, BIC, W/TPD
20	1	15901	CABLE ASSEMBLY, 72" BLACK
21	1	26744	CAPSCREW, M8x1.25 X 12mm
22	1	61950	WIRE ROPE ASSEMBLY, 7/16x90'
23	1	16064	CPSCR BTN HD, 5/16-18x3/8"
24	1	68774	S/P, CONTROL PACK,16.5ti
25	1	33295	CABLE ASSEMBLY, 72" RED
	4	28396	SOLENOID, TERMINAL UPRIGHT (N/S)
27	1	68776	HOUSING, ASSY, CONTROL,16.5ti
28	1	72566	REMOTE CONTROL ASSEMBLY, W/LED-FLASHLIGHT
29	1	28626	HOOK, CLEVIS, 1/2" SAFETY
30	1	61956	ROLLER FAIRLEAD ASSEMBLY
31	1	68648	LABEL,16.5ti WARNING
32	1	68646	LABEL,MODEL IDENTIFIER,16.5ti

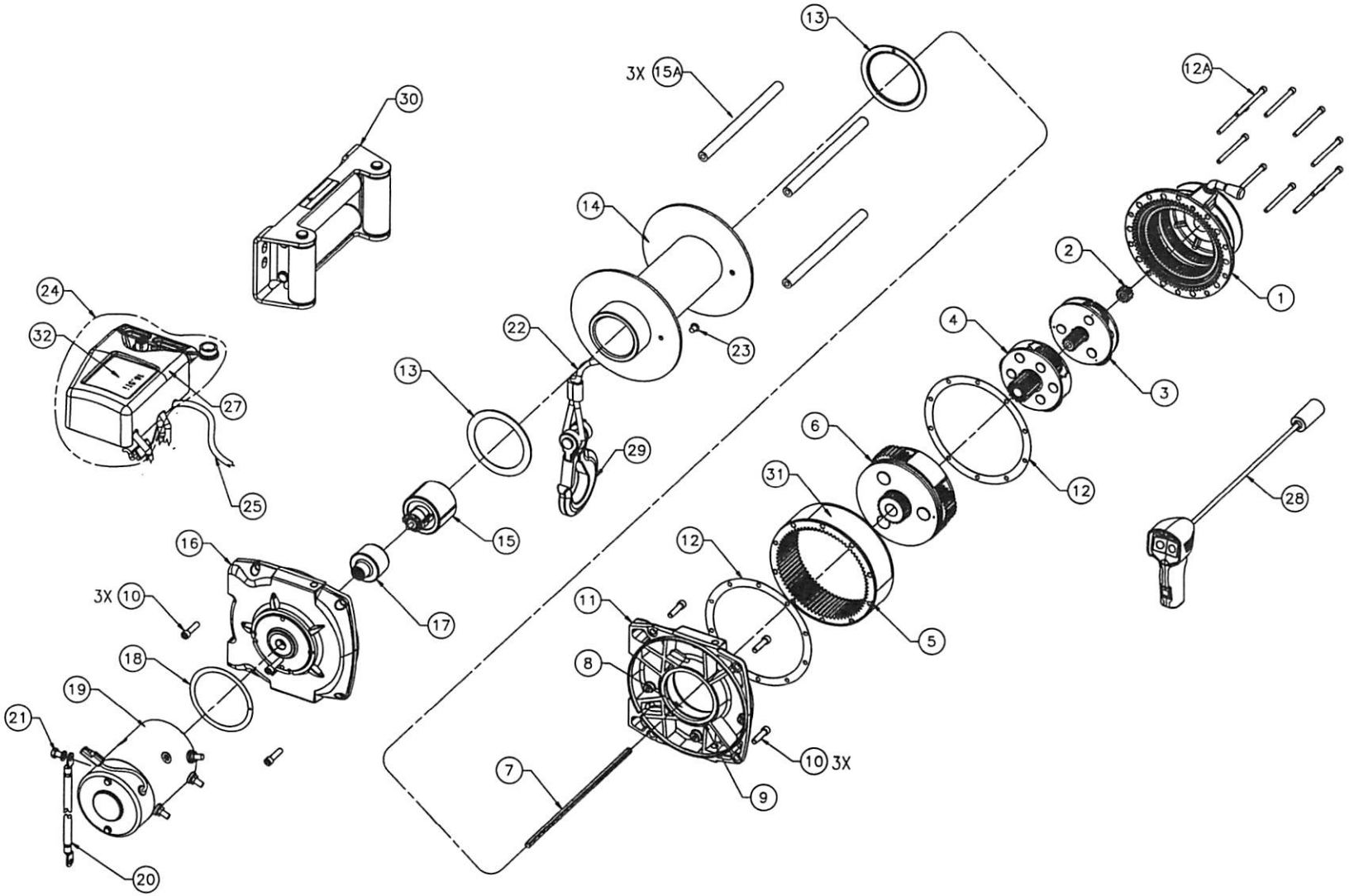

© 2006 Copyright Warn Industries, Inc. All rights reserved.

Warn Industries, Inc.
12900 S.E. Capps Road
Clackamas, OR USA 97015-8903
1-503-722-1200 FAX: 1-503-722-3000
www.warn.com
Customer Service / Service Clients: 1-800-543-9276
International Sales Support / Les Ventes Internationales
Soutiennent: 1-503-722-1200

© 2011 Warn Industries, Inc.
WARN®, the WARN logo are registered trademarks of Warn Industries, Inc.
WARN® et le logo WARN sont des marques déposées de Warn Industries, Inc.

CE

68735B6

Large Frame Ti Winch

INSTALLATION AND OPERATOR'S GUIDE
GUIDE D'INSTALLATION ET OPERATEUR

English 1

Français 12

Español 23

Winch Installation and Operator's Guide

Every winching situation has the potential for personal injury. In order to minimize that risk, it is important to read this guide and *The Basic Guide to Winching Techniques* carefully. Please familiarize yourself with the operation of your winch before using it, and be constantly safety oriented. In this guide, we will set forth many of the basic rules of safe winch operation. Please read *The Basic Guide to Winching Techniques* for more information on your winch and proper rigging techniques. Remember, because every winching situation is different, your constant good judgment and consistent focus on safety are of great importance.

TABLE OF CONTENTS:

SAFETY

Symbol Index 2
General Safety Precautions 3-5
Safe Working Conditions 6

INSTRUCTIONS

Mounting Winch 7
Electrical Connections 8
Operating Instructions 9-10
Stretching Wire Rope 10-11

Warn Industries Inc.
12900 SE Capps Road
Clackamas, OR 97015
USA

Customer Service: (800) 543-WARN (9276)
International: (503) 722-1200
Fax: (503) 722-3000

www.warn.com

WARN® and the WARN logo are registered trademarks of Warn Industries, Inc.
© 2011 Warn Industries, Inc.

SYMBOL INDEX

SYMBOL	EXPLANATION
	Read the Instruction Manual
	Always Wear Hearing and Eye Protection
	Never Use Winch as a Hoist
	Properly Seat Load in Throat of Hook
	Wind Rope on Bottom of Drum
	Finger/Fairlead Crushing Hazard
	Hand Piercing/Cutting Hazard
	Explosion/Bursting Hazard
	Sharp Edge Hazard
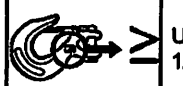	Use hook larger than 1/2" (13mm)

SYMBOL	EXPLANATION
	Always Wear Leather Gloves
	Do Not Move People
	Always Use Supplied Hook Strap
	Never Apply Load to Hook Tip or Latch
	Never Wind Rope Over Top of Drum
	Fairlead Pinch Point
	Hot Surface Hazard
	Fire and Burn Hazard
	Moving Parts Hazard

Warnings and Cautions

As you read these instructions, you will see WARNINGS, CAUTIONS, NOTICES and NOTES. Each message has a specific purpose. WARNINGS are safety messages that indicate a potentially hazardous situation, which, if not avoided could result in serious injury or death. CAUTIONS are safety messages that indicate a potentially hazardous situation which, if not avoided, could result in minor or moderate injury. A CAUTION may also be used to alert against unsafe practice. CAUTIONS and WARNINGS identify the hazard, indicate how to avoid the hazard, and advise of the probable consequence of not avoiding the hazard. NOTICES are messages to avoid property damage. NOTES are additional information to help you complete a procedure.
PLEASE WORK SAFELY!

WARNING

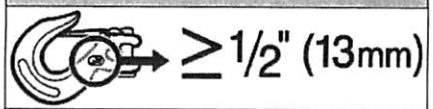

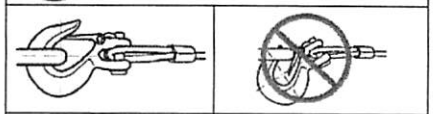

MOVING PARTS ENTANGLEMENT HAZARD

Failure to observe these instructions could lead to serious injury or death.

- Always use a hook marked 1/2" (13 mm) or larger with the M15000 and 16.5ti fairlead.
- Always ensure hook latch is closed and not supporting load.
- Never apply load to hook tip or latch. Apply load only to the center of hook.
- Never use a hook whose throat opening has increased, or whose tip is bent or twisted.
- Always use a hook with a latch.
- Always keep wired remote control lead and power cord clear of the drum, rope, and rigging. Inspect for cracks, pinches, frayed wires or loose connections. Damaged components must be replaced before operation.

WARNING

MOVING PARTS ENTANGLEMENT HAZARD

Failure to observe these instructions could lead to serious injury or death.

General Safety:

- Always Know Your Winch. Take time to fully read the Instructions and/or Operations Guide, and/or Basic Guide to Winching Techniques, in order to understand your winch and its operations.
- Never exceed winch or winch rope rated capacity. Double line using a snatch block to reduce winch load.
- Always wear heavy leather gloves when handling winch rope.
- Never use winch or winch rope for towing. Shock loads can damage, overload and break rope.
- Never use a winch to secure a load.
- Never operate this winch when under the influence of drugs, alcohol or medication.
- Never operate this winch if you are under 16 years of age.
- Always ensure the operator and bystandnders are aware of the stability of the vehicle and/or load.
- Always pass remote lead thru window when used in vehicle.

Installation Safety:

- Always choose a mounting location that is sufficiently strong to withstand the maximum pulling capacity of your winch.
- Always use grade 5 (grade 8.8 metric) or better hardware.
- Never weld mounting bolts.
- Always use factory approved mounting hardware, components, and accessories.
- Never use bolts that are too long.
- Always complete the winch installation and hook attachment before installing the wiring.
- Always keep hands clear of winch rope, hook loop, hook and fairlead opening during installation, operation, and when spooling in or out.
- Always position fairlead with warning readily visible on top.
- Always prestretch rope and respool under load before use. Tightly wound rope reduces chances of "binding", which can damage the rope.

WARNING

MOVING PARTS ENTANGLEMENT HAZARD

Failure to observe these instructions could lead to serious injury or death.

Winching Safety:

- Always inspect winch rope, hook, and slings before operating winch. Frayed, kinked or damaged winch rope must be replaced immediately. Damaged components must be replaced before operation. Protect parts from damage.
- Always remove any element or obstacle that may interfere with safe operation of the winch.
- Always be certain the anchor you select will withstand the load and the strap or chain will not slip.
- Always use supplied hook strap whenever spooling winch rope in or out, during installation and during operation.
- Always require operators and bystanders to be aware of vehicle and or load.
- Always be aware of stability of vehicle and load during winching, keep others away. Alert all bystanders of an unstable condition.
- Always unspool as much wire rope as possible when rigging. Double line or pick distant anchor point.
- Always take time to use appropriate rigging techniques for a winch pull.
- Never touch winch rope or hook while someone else is at the control switch or during winching operation.
- Never engage or disengage clutch if winch is under load, winch rope is in tension or drum is moving.
- Never touch winch rope or hook while under tension or under load.
- Always stand clear of winch rope and load and keep others away while winching.
- Never use vehicle to pull load on winch rope. Combined load or shock load can damage, overload and break rope.
- Never wrap winch rope back onto itself. Use a choker chain or tree trunk protector on the anchor.

WARNING

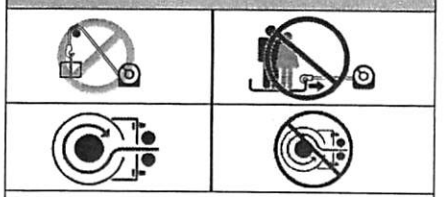

FALLING OR CRUSHING HAZARD

Failure to observe these instructions could lead to serious injury or death.

- Always stand clear, keep hands clear, keep others away.
- Never operate winch with less than 5 wraps of rope around the drum. Rope could come loose from the drum, as the rope attachment to the drum is not designed to hold a load.
- Never use winch as a hoist or to suspend a load.
- Always be certain anchor will withstand load, use appropriate rigging and take time to rig correctly.
- Never use winch to lift or move persons.
- Never use excessive effort to freespool winch rope.
- Always use proper posture/lifting technique or get lifting assistance while handling and installing product.
- Always spool the rope onto the drum in the direction specified by the winch warning label on the winch and/or documentation. This is required for the automatic brake (if so equipped) to function properly.
- Always spool the winch rope onto the drum as indicated by the drum rotation label.

WARNING

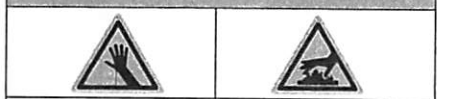

CUT AND BURN HAZARD

Failure to observe these instructions could lead to serious injury or death.

To avoid injury to hands and fingers:

- Always wear heavy leather gloves when handling winch rope.
- Always be aware of possible hot surfaces at winch motor, drum or rope during or after winch use.

WARNING

CHEMICAL AND FIRE HAZARD

Failure to observe these instructions could lead to serious injury or death.

- **Always** remove jewelry and wear eye protection.
- **Never** route electrical cables across sharp edges.
- **Never** route electrical cables near parts that get hot.
- **Never** route electrical cables through or near moving parts.
- **Always** place the supplied terminal boots on wires and terminals as directed by the installation instructions.
- **Never** lean over battery while making connections.
- **Never** route electrical cables over battery terminals.
- **Never** short battery terminals with metal objects.
- **Always** verify area is clear of fuel lines, fuel tank, brake lines, electrical wires, etc., when drilling.
- **Always** consult operator's manual for proper wiring details.
- **Always** insulate and protect all exposed wiring and electrical terminals.

CAUTION

CUT AND BURN HAZARD

Failure to observe these instructions could lead to minor or moderate injury.

- **Never** let winch rope slip through your hands.

CAUTION

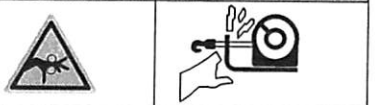

MOVING PARTS ENTANGLEMENT HAZARD

Failure to observe these instructions could lead to minor or moderate injury.

To avoid injury to hands or fingers:

- **Never** leave remote control where it can be activated during free spooling, rigging, or when the winch is not being used.
- **Never** leave the winch remote control plugged in when installing, freespooling, rigging, servicing or when the winch is not being used.

NOTICE

AVOID WINCH AND EQUIPMENT DAMAGE

- **Always** avoid side pulls which can pile up wire rope at one end of the drum. This can damage wire rope or winch.
- **Always** ensure the clutch is fully engaged or disengaged.
- **Always** use care to not damage the vehicle frame when anchoring to a vehicle during a winching operation.
- **Never** submerge winch in water.
- **Always** store the remote control in a protected, clean, dry area.

⚠ WARNING
Always stand clear, keep hands clear, keep others away.

⚠ WARNING
Always require operators and bystanders to be aware of vehicle and or load.

⚠ CAUTION
Never leave remote control where it can be activated during free spooling, rigging, or when the winch is not being used.

NOTICE
Never submerge winch in water.

SAFE WORKING CONDITIONS

The operator should always operate the winch from a safe position when pulling a load. The safe areas are: (1) Perpendicular to the wire rope, (2) Inside the vehicle with the hood up (if winch is mounted on front of vehicle). These safe positions will help prevent the wire rope from striking the operator if the wire rope fails when under load.

Operate winch from the fully extended remote control cord length whenever possible. The operator must always be at least 8 ft. (2.44 m) from the winch while operating. This will prevent entanglement with the fairlead and keep the operator out of harms way during winch load pulling.

Never work around the wire rope while under load.

Sound Emissions

The winch is designed so that the sound emissions do not exceed 70 dBa from the operator's station. The operator must be at least 8 ft. (2.44 m) from the winch while operating. If the winch is exceeding 70 dBa from the operator's station, have the winch inspected at an authorized service center.

Cleaning

Do not direct high pressure water (pressure washers, car washes, etc.) between the drum support and drum flange or clutch lever.

Use low pressure water and a soapy rag or sponge to clean the winch.

Avoid using chemicals that may damage the finish.

Thoroughly clean salt residue from the winch as soon as possible to minimize corrosion.

Maintenance

No lubrication is required for the life of the winch unless the winch has been submerged in water. If this occurs, a qualified service center must complete service as soon as possible to prevent corrosion damage. If the control pack is submerged, it must be replaced when the winch is serviced.

Check battery cables and electrical connections at 90 day intervals to be certain they are clean and tight at all connection points.

Inspect the wire rope before and after each winching operation. When damaged, replace with the size specified in the Replacement Parts List, or go to the Warn website at www.warn.com.

The wire rope must always spool onto the drum as indicated by the drum rotation decal on the winch.

MOUNTING WINCH

Choose a mounting location that is sufficiently strong enough to withstand the loads you intend to winch. Only the mounting orientations shown are possible for safe winching operation. All others are improper and inappropriate. The use of recommended bolt and lock washer combinations torqued to recommended levels will prevent vibration during operation. The mounting details indicate the proper torque levels.

Remember the winch rope must always spool onto the drum as indicated by the drum rotation decal.

Refer to the following diagrams for proper mounting orientation.

Control Pack Installation

Mount the control pack according to the instructions included in the WARN mounting system kit. Use the bracket included in the kit.

The control pack mounting fasteners may also be moved to the unused holes in the control pack base plate for additional mounting flexibility.

⚠ WARNING
Always choose a mounting location that is sufficiently strong to withstand the maximum pulling capacity of your winch.

⚠ WARNING
Always complete the winch installation and attach the hook before installing the wiring.

⚠ WARNING
Never use bolts that are too long.

Plate Thickness	Bolt Length
5/16" (8 mm)	1.5" (40 mm)
3/8" (10 mm)	1.5" (40 mm)
1/2" (13 mm)	1.75" (45 mm)

Mounting Bolt Pattern:

Standard: 10" x 4.5", 254 mm x 114.3 mm

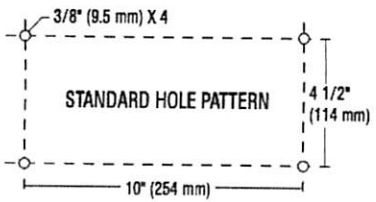

Mounting Details:

(1) Smooth and flat, thickness = 5/16" (8 mm)
(2) 7/16" (11.1 mm) lockwasher X 4
(3) 7/16-14 X 1 1/2" long, grade 5 bolt X 4
Torque 50-55 ft. lbs. (68-75Nm)
(4) 7/16" (11.1 mm) flatwasher X 6
(5) 7/16-14 X 1 3/4" long, grade 5 bolt X 2
Torque 50-55 ft. lbs. (68-75Nm)

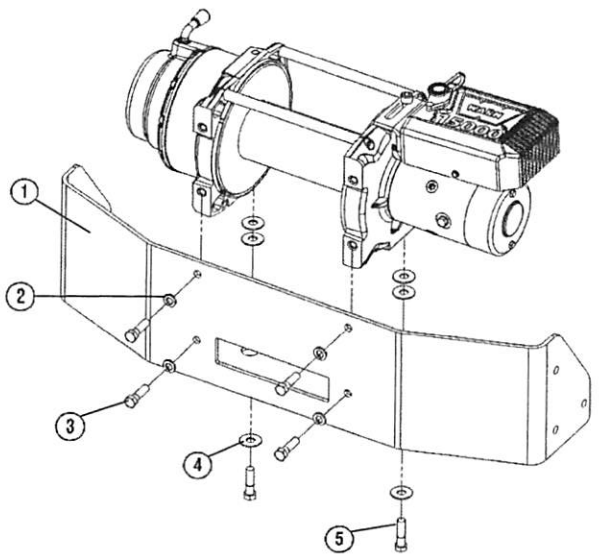

⚠ WARNING
Never route electrical cables across sharp edges.

⚠ WARNING
Never route electrical cables near parts that get hot.

⚠ WARNING
Never route electrical cables through or near moving parts.

⚠ WARNING
Always place the supplied terminal boots on wires and terminals as directed by the installation instructions.

⚠ WARNING
Always insulate and protect all exposed wiring and electrical terminals.

ELECTRICAL CONNECTIONS

Use the included insulating boots on exposed connections to prevent electrical shorting. Route battery connection cables in areas which will not cause them to chafe or cut through the insulation causing a potential short circuit.

Upon completion of installation, check winch for proper operation.

Electrical Diagrams:

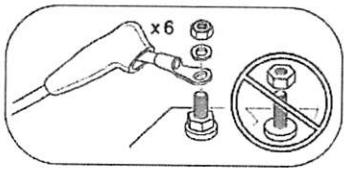

Battery Recommendations

A fully charged battery and good connections are essential to the proper operation of your winch. The minimum requirement for a 12 volt DC battery is 650 Cold Cranking Amps.

Pin #	Color
1	Brown
2	Green
3	Black
4	White
5	Blue
6	Red

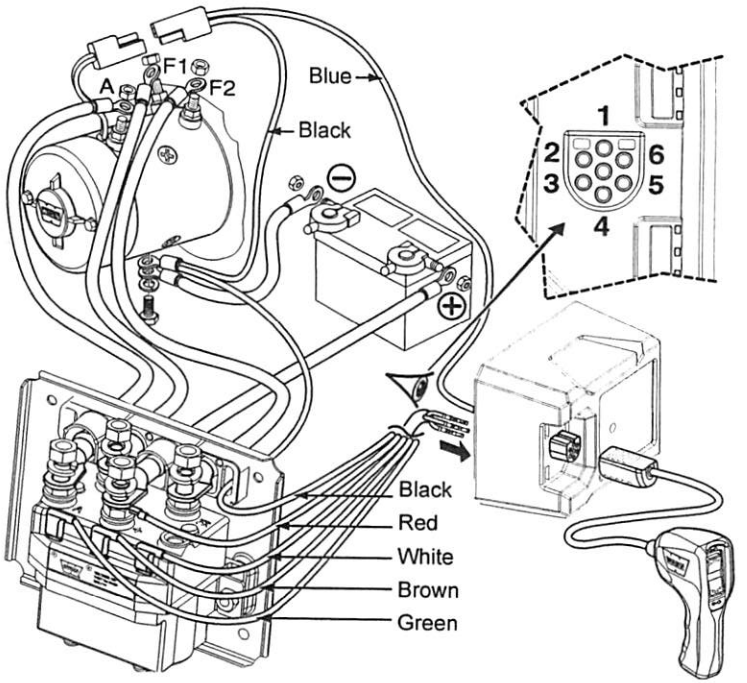

Remote Control Switch

Do not leave the remote plugged into the winch when not in use. Leaving the remote plugged in, may result in a dangerous condition and/or battery drain.

Vertical/Horizontal Remote:

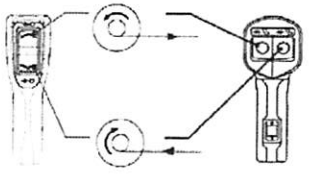

Clutch Operation

When the clutch is engaged, the gear train is coupled to the wire rope drum and power can be transferred from the winch motor. When the clutch is disengaged it is in the freespool position and the gear train and wire rope drum are uncoupled allowing the drum to rotate freely.

The clutch lever, located on the winch housing opposite the motor, controls the clutch position. To prevent damage, always fully engage or fully disengage the clutch lever.

Disengaged:

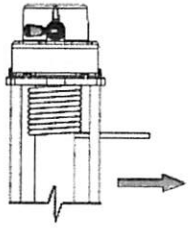

Engaged:

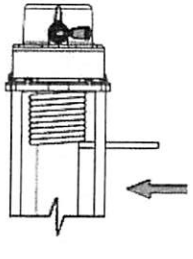

Spooling Out

Freespooling is generally the quickest and easiest way to spool out wire rope. Before freespooling wire rope out from the winch, power out enough rope to remove any tension the wire rope might be under. Disengage the clutch. Then freespool by manually spooling out enough wire rope for the winching operation. See *The Basic Guide to Winching Techniques* for more information.

Always leave at least 5 wraps of rope on the drum.

Spooling In Under Load

Never exceed winch's rated line pull.

Power-in the wire rope evenly and tightly on the drum. This prevents the outer wire wraps from sinking into the inner wraps, binding, and damaging the wire rope.

Avoid shock loads when spooling, by pulsing the control switch to take up wire rope slack. Shock loads can momentarily far exceed the winch and rope ratings.

Spooling In Under No Load

Spooling with an Assistant: Have the assistant hold the hook strap putting as much constant tension on the wire rope as possible. While keeping tension, the assistant should walk toward the winch while you operate the control switch spooling in the wire rope. Release the switch when the hook is a minimum of 6 ft. (2 m) from the fairlead opening.

Spool in the remainder for storage as directed below.

Spooling Alone: Arrange the wire rope to be spooled so it will not kink or tangle when spooled. Be sure any wire rope on the drum is tightly and evenly layered. Spool enough wire rope to complete the next full layer on the drum. Tighten and straighten the layer.

⚠ WARNING

Always take time to fully understand your winch and the winching operation by reviewing The Basic Guide to Winching Techniques included with your winch.

⚠ WARNING

Never engage or disengage clutch if winch is under load, winch rope is in tension or drum is moving.

⚠ WARNING

Never operate winch with less than 5 wraps of rope around the drum. Rope could come loose from the drum, as the rope attachment to the drum is not designed to hold a load.

NOTICE

Do Not power-out rope more than 30 ft. without allowing the winch to cool for 20 minutes before powering rope back in. Instead, place the clutch in freespool and pull the rope off by hand.

⚠ WARNING

Always keep hands clear of winch rope, hook loop, hook and fairlead opening during installation, operation, and when spooling in or out.

⚠ WARNING

Never touch winch rope or hook while someone else is at the control switch or during winching operation.

⚠ WARNING

Always wear heavy leather gloves when handling winch rope.

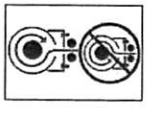

⚠ WARNING

Always use supplied hook strap whenever spooling winch rope in or out, during installation or operation to avoid injury to hands and fingers.

OPERATING INSTRUCTIONS Cont.

Repeat process until the hook is a minimum of 6 ft. (2 m) from the fairlead opening.

Spool in the remainder for storage as directed below.

Spooling Remainder for Storage

When the hook is within 6 ft. (2 m) of the fairlead, disconnect the hook from the anchor or load. Hold onto the supplied hook strap and hold tension on the winch rope. Slowly power-in the winch by "pulsing" the power-in switch on the remote control until the hook is within 3 ft. (1 m) of the fairlead. Stop winching in and attach the hook to a suitable anchor point on the vehicle.

DO NOT POWER THE HOOK INTO THE FAIRLEAD. This could cause damage to the fairlead. Once the hook is suitably attached to the vehicle, power-in the remaining slack in the winch rope by "pulsing" the power-in switch on the remote control until there is minimal slack in the winch wire rope.

Overloading/Overheating

This winch is rated for intermittent duty. When the motor approaches stall speed, very rapid heat buildup occurs which may cause motor damage.

Double-line rigging (see *The Basic Guide to Winching Techniques*) will reduce the amperage draw, and reduce heat buildup in the motor. This allows longer continual use.

TI Motor Temperature Indicator

When the motor reaches a temperature that could result in damage if the winch is operated for a long period of time, the LED in the remote will blink. Short periods of operation with the LED blinking will not damage the winch. Long periods of operation should be avoided.

STRETCHING WIRE ROPE

The life of a wire rope is directly related to the use and care it receives. During its first use, a new wire rope must be spooled onto its drum under a load of at least 1000 lbs. (454 kgs). Use the following instructions to properly stretch the wire rope onto the winch drum.

1) Choose a FLAT AND LEVEL location that is large enough to run out the entire length of wire rope.

2) Turn the clutch lever on the winch to the "Free Spool" position. Spool out the wire rope to the last 5 wraps on the drum. Once the wire rope is spooled out, turn the clutch lever on the winch to the "Engaged" position.

3) Attach the hook end of the rope to a suitable anchor point and back the vehicle away from the anchor point until there is very little slack in the wire rope. Before getting out of the vehicle, set the parking brake, place the vehicle in gear or park and turn the vehicle off.

4) Connect the remote control to the winch. Standing approximately 8 ft. (2.44 m) away from the winch, power-in the winch until all of the slack is wound onto the winch drum. Disconnect the remote control from the winch. Hold tension on the wire rope with one hand; carefully push the wire rope to the side of the drum the wire rope is attached to so there are no gaps between each coil on the drum. Be sure to check that the wire rope is winding off of the bottom of the drum, not the top, or the automatic load holding brake will not function properly. (If the wire rope is winding off the top you have powered the winch "out" instead of "in" on the remote control).

STRETCHING WIRE ROPE Cont.

5) The following steps should be done using two people for proper safety. If you attempt to tension your wire rope alone be sure to always engage the parking brake, place the transmission in gear and turn the vehicle off every time you exit the vehicle to inspect the winch wire rope. Never exit the vehicle with a load on the winch wire rope. Tensioning the wire rope is critical to ensure a long product life. Tensioning the wire rope will prevent outer layers of wire rope from pinching and deforming the inner layers.

6) Use care to evenly wrap each layer to prevent damage to the rope.

7) Pass the remote control through the driver's window for the driver of the vehicle to operate. Instruct your assistant to stand to the side of the vehicle and away from the winch wire rope. Your assistant should signal you if the wire rope is winding correctly by watching it move across the fairlead as the wire rope is powered in. Start the vehicle and place the transmission in neutral. Release the parking brake while applying moderate brake pedal pressure. Press power-in on the remote control switch. After winching in for approximately 6 ft. (2 m), stop winching. Slowly let up off of the brake pedal and then apply the parking brake. This will ensure that there is no load on the winch rope. Then place the transmission in park or in gear and turn the vehicle off. Exit the vehicle and inspect the winch to make sure that the wire rope is being evenly wound onto the winch drum and not sinking into the lower layer. If the wire rope is sinking, power the wire rope out and repeat this step from the beginning with more brake pedal pressure.

8) When you are convinced the wire rope is winding onto the winch drum properly, repeat step 6 until the vehicle is within 6 ft. (2 m) of the winch anchor. Once within 6 ft. (2 m), slowly let up off of the brake pedal and then apply the parking brake. This will ensure that there is no load on the winch wire rope. Then place the transmission in park or in gear and turn the vehicle off. Exit the vehicle. Disconnect the hook from the anchor. While holding onto the supplied hook strap, hold tension on the winch rope and slowly power-in the winch by "pulsing" the power-in switch on the remote control until the hook is within 3 ft. (1 m) of the fairlead. Stop winching in and attach the hook to a suitable anchor point on the vehicle.

DO NOT POWER THE HOOK INTO THE FAIRLEAD. This could cause damage to the fairlead. Once the hook is suitably attached to the vehicle, power-in the remaining slack in the winch rope by "pulsing" the power-in switch on the remote control until there is minimal slack in the winch wire rope.

⚠ WARNING
Always prestretch rope and respool under load before use. Tightly wound rope reduces chances of "binding", which can damage the rope.

⚠ WARNING
Never touch rope or hook while someone else is at the control switch or during winching operation.

⚠ WARNING
Never operate winch with less than 5 wraps of rope around the drum. Rope could come loose from the drum, as the rope attachment to the drum is not designed to hold a load.

TRADUCTION DE LA NOTICE ORIGINALE

Treuil
Guide d'installation et manuel de l'utilisateur

Chaque situation de treuillage peut potentiellement occasionner des blessures. Afin de minimiser ce risque, il est important de lire attentivement le présent guide ainsi que *le manuel de base des techniques de treuillage*. Veillez à vous familiariser avec le maniement du treuil avant de l'utiliser et à vous préoccuper avant tout de la sécurité. Nous exposons dans ce guide de nombreuses règles de sécurité fondamentales pour le maniement du treuil. Veuillez lire *le manuel de base des techniques de treuillage* pour de plus amples informations concernant votre treuil et les techniques adéquates de câblage. Ne pas oublier, comme chaque situation de treuillage est différente, le bon sens et l'attachement constant aux principes de sécurité sont d'une importance primordiale.

TABLE DES MATIÈRES :

SÉCURITÉ

Index des symboles 13
Mesures générales de sécurité 14-16
Conditions de travail sures 17

INSTRUCTIONS

Montage du treuil 18
Raccordements électriques 19
Instructions d'utilisation 20-21
Étirement initial du câble 21-22

Warn Industries Inc.
12900 SE Capps Road
Clackamas, OR 97015
États-Unis

Service à la clientèle : (800) 543-WARN (9276)
International : (503) 722-1200
Télécopie : (503) 722-3000

www.warn.com

WARN® et le logo WARN sont des marques déposées de Warn Industries Inc.
© 2011 Warn Industries Inc.

SYMBOLE	EXPLICATION
	Lire le manuel d'utilisation
	Toujours porter un dispositif de protection auditive et oculaire
	Ne jamais utiliser le treuil comme palan.
	Positionner correctement la charge dans la gorge du crochet
	Enrouler le câble sur le dessous du tambour
	Danger d'écrasement des doigts dans le guide-câble
	Risque de percement/ coupure des mains
	Risque d'explosion/ rupture
	Danger en raison d'une arête tranchante
	Use hook larger than 1/2" (13mm)

SYMBOLE	EXPLICATION
	Toujours porter des gants de cuir
	Ne pas déplacer des personnes
	Toujours utiliser la sangle de crochet fournie
	Ne jamais appliquer la charge sur l'extrémité ou le loquet du crochet
	Ne jamais enrouler le câble sur le dessus du tambour
	Point de pincement du guide-câble
	Risque de surface chaude
	Risque d'incendie et de brûlure
	Danger lié à des pièces mobiles

Avertissements et mises en garde

Les directives suivantes comprennent des indications intitulées AVERTISSEMENT, ATTENTION, AVIS et REMARQUE. Chacune a un objectif bien précis : AVERTISSEMENT présente des consignes de sécurité soulignant un danger potentiel qui, s'il n'est pas évité, peut entraîner des blessures graves ou la mort. ATTENTION comprend des consignes de sécurité signalant un danger potentiel qui, s'il n'est pas évité, peut entraîner des blessures légères ou modérées. ATTENTION sert aussi à signaler une utilisation dangereuse. ATTENTION et AVERTISSEMENT identifient un danger, indiquent comment l'éviter et montrent ses conséquences possibles si on l'ignore. AVIS présente des consignes visant à éviter les dommages matériels. REMARQUE donne des renseignements additionnels qui aident à accomplir une procédure. **TRAVAILLEZ PRUDEMMENT !**

AVERTISSEMENT

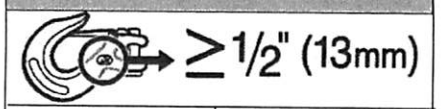

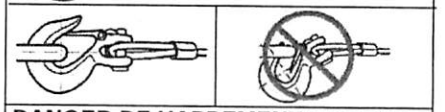

DANGER DE HAPPEMENT PAR DES PIÈCES MOBILES

Le non-respect des consignes peut entraîner des blessures graves ou la mort.

- Utilisez toujours un crochet portant la mention « 1/2», 13 mm » ou plus gros avec le guide-câble des modèles M15000 et 16.5ti.
- **Toujours** s'assurer que le loquet du crochet est fermé et qu'il ne soutient aucune charge.
- **Ne jamais** appliquer la charge sur l'extrémité ou le loquet du crochet. Appliquer la charge uniquement au centre du crochet.
- **Ne jamais** utiliser un crochet dont l'ouverture de la gorge a augmenté ou dont l'extrémité est courbée ou tordue.
- **Toujours** utiliser un crochet muni d'un loquet.
- **Toujours** garder le fil de la télécommande et le cordon d'alimentation à l'écart du tambour, du câble et du câblage. S'assurer qu'il n'y a pas de fissures, de points de pincement, de fils effilochés ou de connexions desserrées. Tous les composants endommagés doivent être remplacés avant d'utiliser le produit.

AVERTISSEMENT

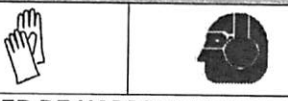

DANGER DE HAPPEMENT PAR DES PIÈCES MOBILES

Le non-respect des consignes peut entraîner des blessures graves ou la mort.

Consignes de sécurité générales :

- **Il faut toujours** avoir une bonne connaissance du treuil. Prendre le temps de bien lire le manuel d'utilisation, et/ou le manuel de base des techniques de treuillage, afin de comprendre le treuil et son fonctionnement.
- **Ne jamais** excéder la capacité nominale du treuil ou du câble d'acier. Un câblage double avec poulie ouvrante permet de réduire la charge subie par le treuil.
- **Toujours** porter des gants de cuir épais durant la manipulation du câble du treuil.
- **Ne jamais** utiliser le treuil ou le câble du treuil pour faire du remorquage. Cela peut endommager, surcharger et casser le câble.
- **Ne jamais** se servir du treuil pour maintenir une charge.
- **Ne jamais** faire fonctionner l'appareil sous l'effet de drogues, de l'alcool ou de médicaments.
- **Ne jamais** laisser des personnes âgées de moins de 16 ans utiliser ce treuil.
- **Toujours** s'assurer que l'opérateur et les personnes présentes sont conscients de la stabilité du véhicule et/ou de la charge.
- **Toujours** faire passer la télécommande par la fenêtre, si on l'utilise de l'intérieur d'un véhicule.

Consignes de sécurité se rapportant à l'installation :

- **Toujours** choisir une surface de montage suffisamment résistante pour supporter la capacité de traction maximale du treuil.
- **Toujours** utiliser un matériel de montage de catégorie 8,8 ou supérieure.
- **Ne jamais** souder les boulons de montage.
- **Toujours** utiliser un matériel de montage, des composants et des accessoires homologués par le fabricant.
- **Ne jamais** utiliser des boulons trop longs.
- **Toujours** achever le montage du treuil et la fixation du crochet avant d'effectuer le câblage.
- **Toujours** garder les mains éloignées du câble du treuil, de la boucle du crochet, du crochet et de l'ouverture du guide-câble durant l'installation et l'utilisation de l'appareil et l'enroulement ou le déroulement du câble.
- **Toujours** positionner le guide-câble avec l'avertissement visible sur le dessus.
- **Toujours** étirer au préalable le câble et l'enrouler sous charge avant de l'utiliser. Un câble enroulé de manière serrée réduit le risque qu'il coince et soit endommagé.

AVERTISSEMENT

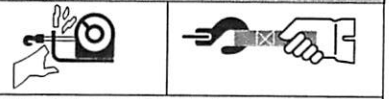

DANGER DE HAPPEMENT PAR DES PIÈCES MOBILES

Le non-respect des consignes peut entraîner des blessures graves ou la mort.

Consignes de sécurité concernant le treuillage :

- **Toujours** inspecter le câble du treuil, le crochet et les élingues avant de faire fonctionner le treuil. Tout câble de treuil effiloché, tordu ou endommagé doit être remplacé immédiatement. Tous les composants endommagés doivent être remplacés avant d'utiliser le produit. Protéger toutes les pièces contre le risque de dommages.
- **Toujours** s'assurer que tout objet ou obstacle pouvant gêner la bonne utilisation du treuil est écarté.
- **Toujours** s'assurer que le point d'ancrage choisi peut supporter la charge et que la sangle ou la chaîne ne glisse pas.
- **Toujours** utiliser la sangle de crochet fournie pour enrouler ou dérouler le câble du treuil, durant l'installation ou l'utilisation.
- **Toujours** exiger de l'opérateur et des personnes présentes d'être attentifs au véhicule et à la charge.
- **Toujours** être conscient de la stabilité du véhicule et de la charge durant le treuillage. Veiller à ce que personne ne s'approche. Alerter toutes les personnes alentour en cas d'instabilité.
- **Toujours** dérouler autant de câble que possible avant de procéder au câblage. Utiliser une ligne double ou choisir un point d'ancrage distant.
- **Toujours** prendre le temps d'utiliser des techniques de câblage adaptées avant d'utiliser le treuil pour tirer.
- **Ne jamais** toucher le câble du treuil ou le crochet lorsqu'une autre personne est à l'interrupteur de commande ou durant le fonctionnement du treuil.
- **Ne jamais** essayer d'embrayer ou de débrayer si le treuil est sous charge, si le câble du treuil est en tension ou si le tambour est en train de tourner.
- **Ne jamais** toucher le câble ou le crochet lorsque le câble est tendu ou sous charge.
- **Toujours** se tenir à l'écart du câble du treuil et de la charge durant l'utilisation et ne jamais laisser personne s'approcher.
- **Ne jamais** se servir d'un véhicule pour tirer une charge sur le câble du treuil. La charge combinée ou un choc peut endommager, surcharger et casser le câble.
- **Ne jamais** replier le câble du treuil sur lui-même. Utiliser toujours une chaîne ou une protection de tronc d'arbre sur le point d'ancrage.

AVERTISSEMENT

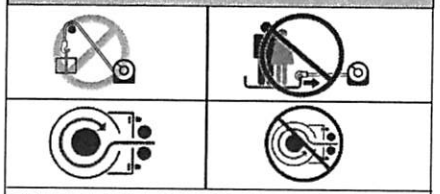

DANGER DE CHUTE OU D'ÉCRASEMENT

Le non-respect des consignes peut entraîner des blessures graves ou la mort.

- **Toujours** rester à l'écart, en gardant les mains et les autres personnes à l'écart également.
- **Ne jamais** utiliser le treuil avec moins de 5 spires de câble enroulées autour du tambour. Le câble pourrait se dérouler du tambour, étant donné que l'ancrage du câble n'est pas conçu pour retenir une charge.
- **Ne jamais** utiliser le treuil comme palan ou pour suspendre une charge.
- **Toujours** s'assurer que le point d'ancrage peut supporter la charge, et prendre le temps d'employer des techniques de câblage appropriées.
- **Ne jamais** utiliser le treuil pour soulever ou transporter des personnes.
- **Ne jamais** forcer trop fort pour dérouler le câble du treuil.
- **Toujours** utiliser une posture/technique de levage adéquate ou demander de l'aide lors de la manipulation ou de l'installation du produit.
- **Toujours** enrouler le câble sur le tambour dans le sens spécifié par l'étiquette d'avertissement apposée sur le treuil ou la documentation du treuil. Cela est nécessaire pour que le frein automatique (le cas échéant) fonctionne correctement.
- **Toujours** enrouler le câble du treuil sur le tambour comme indiqué par l'autocollant de rotation du tambour.

AVERTISSEMENT

RISQUE DE COUPURE ET DE BRÛLURE

Le non-respect des consignes peut entraîner des blessures graves ou la mort.

Pour éviter de se blesser les mains et les doigts :

- **Toujours** porter des gants de cuir épais durant la manipulation du câble du treuil.
- **Toujours** penser aux surfaces chaudes au niveau du moteur du treuil, du tambour ou du câble durant ou après l'utilisation du treuil.

AVERTISSEMENT

RISQUES ASSOCIÉS AUX PRODUITS CHIMIQUES ET RISQUE D'INCENDIE

Le non-respect des consignes peut entraîner des blessures graves ou la mort.

- **Toujours** retirer les bijoux et porter des lunettes de sécurité.
- **Ne jamais** faire passer les câbles électriques par-dessus des bords tranchants.
- **Ne jamais** faire passer les câbles électriques à proximité de pièces qui s'échauffent.
- **Ne jamais** faire passer les câbles électriques à travers des pièces mobiles ou à proximité.
- **Toujours** placer les capuchons fournis sur les fils et les bornes, conformément aux instructions d'installation.
- **Ne jamais** se pencher au-dessus de la batterie en procédant aux connexions.
- **Ne jamais** faire passer les câbles électriques par-dessus les bornes de la batterie.
- **Ne jamais** court-circuiter les bornes de la batterie avec des objets métalliques.
- **Toujours** s'assurer que la zone ne contient pas de conduites de carburant, de réservoir de carburant, de conduites de frein, de câblage électrique, etc., avant tout perçage.
- **Toujours** consulter le manuel de l'utilisateur pour les informations correctes de câblage.
- **Toujours** isoler et protéger tous les fils et bornes électriques exposés.

ATTENTION

RISQUE DE COUPURE ET DE BRÛLURE

Le non-respect des instructions peut entraîner des blessures mineures ou modérées.

- **Ne jamais** laisser le câble du treuil glisser dans les mains.

ATTENTION

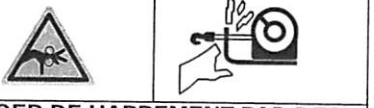

DANGER DE HAPPEMENT PAR DES PIÈCES MOBILES

Le non-respect des instructions peut entraîner des blessures mineures ou modérées.

Pour éviter de se blesser les mains ou les doigts :

- **Ne jamais** laisser la télécommande dans un emplacement où elle peut être activée durant la mise en roue libre, le câblage ou quand le treuil n'est pas utilisé.
- **Ne jamais** laisser la télécommande du treuil branchée durant l'installation, le déroulement en roue libre, le câblage, l'entretien ou quand le treuil n'est pas utilisé.

AVIS

Éviter d'endommager le TREUIL et l'équipement

- **Toujours** éviter de tirer sur le côté, ce qui a pour effet d'empiler le câble du treuil sur l'une des extrémités du tambour. Cela peut endommager le câble ou le treuil.
- **Toujours** s'assurer d'avoir complètement embrayé ou complètement débrayé.
- **Toujours** faire attention à ne pas endommager le cadre du véhicule si l'on décide de s'arrimer à un véhicule pour pouvoir travailler avec le treuil.
- **Ne jamais** submerger le treuil dans l'eau.
- **Toujours** ranger la télécommande dans un endroit sûr, propre et sec.

CONDITIONS DE TRAVAIL SURES

Pendant la traction d'une charge, l'opérateur doit toujours faire fonctionner le treuil en se tenant en position sûre. Les emplacements sûrs sont : (1) perpendiculaires au câble, (2) à l'intérieur du véhicule avec le capot relevé (si le treuil est monté à l'avant du véhicule). Ces endroits sûrs permettront d'empêcher que le câble ne frappe l'opérateur en cas de rupture sous charge.

Autant que possible, utiliser le treuil avec le câble de la télécommande complètement déployé. Celui-ci doit toujours demeurer à une distance minimale de 2,44 m du treuil pendant son fonctionnement. Cela évite d'être happé par le guide-câble et maintient l'opérateur dans une zone de sécurité durant la traction de la charge.

Ne jamais travailler à proximité d'un câble sous charge.

Niveau de bruit

Ce treuil est conçu de manière à ce que le niveau de bruit émis ne dépasse pas 70 dBa à l'endroit où se trouve le manipulateur. Celui-ci doit demeurer à une distance minimale de 2,44 m du treuil pendant son fonctionnement. Faire inspecter le treuil dans un centre de service agréé si le bruit dépasse 70 dBa au niveau de l'opérateur.

Nettoyage

Ne pas diriger un jet d'eau haute pression (laveuses haute pression, lave-auto, etc.) entre le support et le rebord du tambour ou le levier d'embrayage.

Nettoyer le treuil à l'aide d'eau sous faible pression et d'une éponge ou d'un chiffon savonneux.

Ne pas utiliser de produits chimiques qui pourraient endommager la finition.

Nettoyer soigneusement les résidus de sel du treuil le plus vite possible afin de minimiser l'effet de corrosion.

Maintenance

Le treuil ne nécessite aucune lubrification pendant sa durée de vie, sauf s'il a été immergé dans l'eau. Si cela se produit, faire réaliser une inspection complète par un centre de service dès que possible pour éviter tout dommage dû à la corrosion. Si le coffret de commande est immergé, il doit être remplacé au moment de l'intervention de service sur le treuil.

Vérifier les câbles de batterie et les connexions électriques tous les 90 jours pour s'assurer qu'ils sont propres et correctement serrés à tous les points de connexion.

Inspecter le câble avant et après chaque utilisation du treuil. S'il est endommagé, le remplacer par un câble de calibre conforme à la liste des pièces de rechange, ou se rendre sur le site Internet Warn à l'adresse www.warn.com.

Le câble doit toujours s'enrouler sur le tambour dans le sens indiqué par l'étiquette de rotation du tambour apposée sur le treuil.

⚠AVERTISSEMENT
Toujours rester à l'écart, en gardant les mains et les autres personnes à l'écart également.

⚠AVERTISSEMENT
Toujours exiger de l'opérateur et des personnes présentes d'être attentifs au véhicule et à la charge.

⚠ ATTENTION
Ne jamais laisser la télécommande dans un emplacement où elle peut être activée durant la mise en roue libre, le câblage ou quand le treuil n'est pas utilisé.

AVIS
Ne jamais submerger le treuil dans l'eau.

⚠AVERTISSEMENT
Toujours choisir une surface de montage suffisamment résistante pour supporter la capacité de traction maximale du treuil.

⚠AVERTISSEMENT
Toujours achever le montage du treuil et fixer le crochet avant d'effectuer le câblage.

⚠AVERTISSEMENT
Ne jamais utiliser des boulons trop longs.

MONTAGE DU TREUIL

Choisir une surface de montage suffisamment résistante pour supporter les charges qui seront halées. Seules les orientations de montage indiquées sont recommandées pour utiliser le treuil en toute sécurité. Toute autre orientation du treuil est inadaptée et ne doit pas être utilisée. Utiliser les boulons et les rondelles d'arrêt recommandés, ainsi que les couples de serrage recommandés pour éviter les vibrations du treuil pendant son fonctionnement. Les détails de montage indiquent les valeurs de couple adéquates.

N'oubliez pas que le câble du treuil doit toujours s'enrouler sur le tambour dans le sens indiqué par l'étiquette de rotation du tambour.

Entraxe de fixation :
254 mm x 114,3 mm

Se reporter aux schémas suivants pour l'orientation de montage correcte.

Installation du coffret de commande

Monter le coffret de commande suivant les instructions jointes au kit de système de montage Warn. Utiliser la console comprise dans le kit.

Pour plus de flexibilité dans le montage, on peut aussi déplacer les fixations de montage du coffret de commande aux trous inutilisés de la plaque de base du coffret.

Épaisseur de plaque	Longueur de boulon
1/4" (7 mm)	1,5" (40 mm)
3/8" (10 mm)	1,5" (40 mm)
1/2" (13 mm)	1,75" (45 mm)

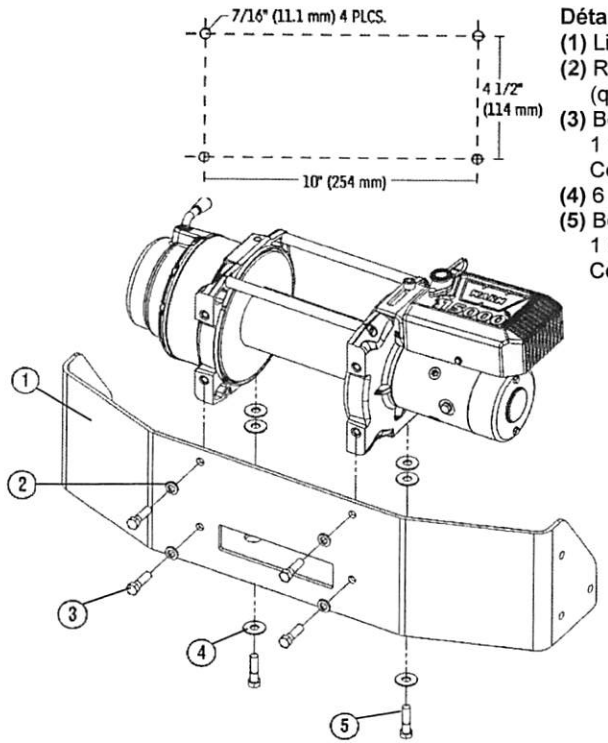

Détails de montage :
(1) Lisse et plat, épaisseur 8 mm
(2) Rondelle d'arrêt 11,1 mm (quantité = 4)
(3) Boulon catégorie 5 de 7/16 14 x 1 1/2po de long (quantité = 4), Couple de serrage 68 à 75 Nm
(4) 6 rondelles plates 11,1 mm
(5) Boulon catégorie 5 de 7/16 14 x 1 3/4po de long (quantité = 2), Couple de serrage 68 à 75 Nm

RACCORDEMENTS ELECTRIQUES

Utiliser des capuchons d'isolation inclus sur les connexions exposées pour éviter les courts-circuits. Les fils de batterie doivent passer par des endroits qui ne risquent pas d'endommager ou de percer l'isolation et de créer des risques de court-circuit.

Une fois l'installation terminée, vérifier que le treuil fonctionne correctement.

Schémas électriques :

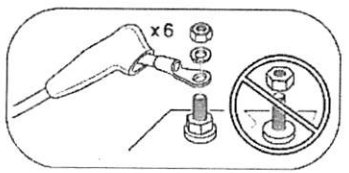

Recommandations concernant la batterie

La charge de la batterie et la qualité des connexions sont essentielles pour que le treuil fonctionne correctement. La capacité de démarrage à froid minimum requise pour une batterie de 12 V c.c. est de 650 A.

Broche n°	Couleur
1	Marron
2	Vert
3	Noir
4	Blanc
5	Bleu
6	Rouge

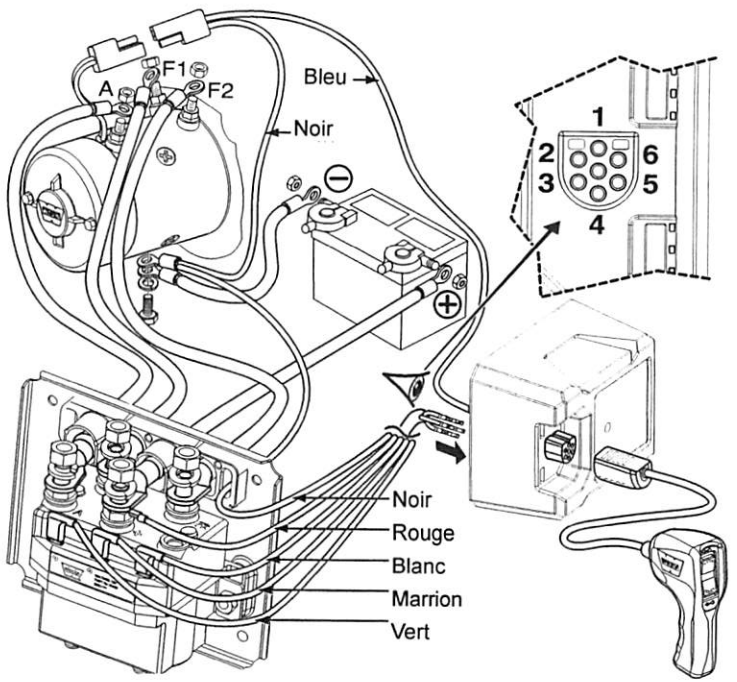

⚠AVERTISSEMENT
Ne jamais faire passer les câbles électriques par-dessus des bords tranchants.

⚠AVERTISSEMENT
Ne jamais faire passer les câbles électriques à proximité de pièces qui s'échauffent.

⚠AVERTISSEMENT
Ne jamais faire passer les câbles électriques à travers des pièces mobiles ou à proximité.

⚠AVERTISSEMENT
Toujours placer les capuchons fournis sur les fils et les bornes, conformément aux instructions d'installation.

⚠AVERTISSEMENT
Toujours isoler et protéger tous les fils et bornes électriques exposés.

⚠AVERTISSEMENT
Toujours prendre le temps de bien se familiariser avec le treuil et son fonctionnement en examinant le Manuel de base des techniques de treuillage inclus avec le treuil.

⚠AVERTISSEMENT
Ne jamais essayer d'embrayer ou de débrayer si le treuil est sous charge, si le câble du treuil est en tension ou si le tambour est en train de tourner.

⚠AVERTISSEMENT
Ne jamais utiliser le treuil avec moins de 5 spires de câble enroulées autour du tambour Le câble pourrait se dérouler du tambour, étant donné que l'ancrage du câble n'est pas conçu pour retenir une charge.

AVIS
Ne pas dérouler le câble de plus de 9 m sans laisser refroidir le treuil pendant 20 minutes avant de recommencer l'enroulement. Utiliser plutôt l'embrayage en déroulement libre en tirant le câble à la main.

Télécommande

Ne pas laisser la télécommande branchée dans le treuil lorsque celui-ci n'est pas en usage. Une télécommande qui reste branchée risque de créer des conditions dangereuses et de vider la batterie.

Télécommande verticale/ horizontale :

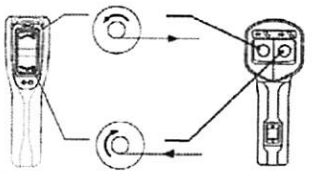

Fonctionnement de l'embrayage

Lorsque l'embrayage est en prise, le train d'engrenages est couplé au tambour du câble et l'entraînement peut alors être transféré du moteur du treuil. Lorsque l'embrayage est débrayé et en position de déroulement en roue libre, le train d'engrenages et le tambour se désaccouplent, ce qui permet au tambour de tourner librement.

Le levier d'embrayage, situé sur le carter du treuil en face du moteur, permet de commander la position de l'embrayage. Pour éviter tout dommage, tourner complètement le levier d'embrayage dans l'une ou l'autre position.

Libéré :

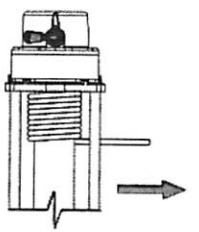

En prise :

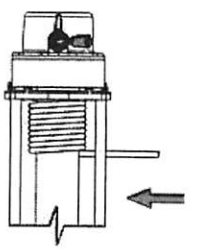

Déroulement du câble

Le déroulement en roue libre constitue généralement la façon la plus rapide et la plus facile de dérouler le câble. Avant de mettre le treuil en roue libre pour dérouler le câble, dérouler au moteur une quantité suffisante de câble pour soulager le câble de toute tension éventuelle. Débrayer. On peut maintenant dérouler manuellement une quantité suffisante de câble pour pouvoir travailler avec le treuil. Voir *le manuel de base des techniques de treuillage* pour de plus amples informations.

Toujours laisser au moins 5 spires de câble sur le tambour.

Enroulement sous charge

Ne jamais dépasser l'effort en 1ère couche du treuil.

Enrouler mécaniquement le câble sur le tambour de manière uniforme et serrée. Cela empêche les spires extérieures de s'enfoncer dans les spires intérieures, ce qui peut coincer et endommager le câble.

Pour éviter les charges de choc durant l'enroulement du câble, actionner l'interrupteur de commande de manière intermittente afin d'éliminer le mou du câble. Les charges de choc peuvent momentanément dépasser de loin la capacité du treuil et du câble du treuil.

Enroulement à vide

Déroulement avec un assistant : Demander à un assistant de tenir la sangle de crochet en appliquant une tension aussi constante que possible sur le câble. Tout en maintenant la tension, il devra se déplacer en direction du treuil pendant l'actionnement de l'interrupteur de commande pour enrouler le câble. Relâcher l'interrupteur lorsque le crochet parvient à une distance minimum de 2 m de l'ouverture du guide-câble.

Enrouler le reste du câble pour le ranger, de la manière indiquée ci-dessous.

Déroulement tout seul : Arranger le câble à enrouler de manière à ce qu'il ne s'entortille ni ne s'emmêle pendant le rembobinage. S'assurer que le câble est enroulé sur le tambour de manière uniforme et serrée. Enrouler une quantité suffisante de câble pour compléter une couche entière sur le tambour.
Serrer et étaler de manière égale la couche de câble.

INSTRUCTIONS D'UTILISATION
Suite

Refaire de même jusqu'à ce que le crochet soit à une distance minimum de 2 m de l'ouverture du guide-câble.

Enrouler le reste du câble pour le ranger, de la manière indiquée ci-dessous.

Enroulement du reste du câble pour le ranger

Lorsque le crochet se trouve à moins de 2 m du guide-câble, détacher le crochet du point d'ancrage ou de la charge. En tenant la sangle de crochet fournie, maintenir la tension sur câble du treuil. Enrouler lentement le treuil en appliquant de petites pressions sur la touche « Power in » (enrouler) de la télécommande jusqu'à ce que le crochet soit à moins de 1 m du guide-câble. Arrêter le treuillage et fixer le crochet sur un point d'ancrage approprié sur le véhicule.

NE PAS LAISSER PAS LE CROCHET ATTEINDRE LE GUIDE-CÂBLE. Cela pourrait endommager le guide-câble. Une fois le crochet fixé correctement au véhicule, enrouler le câble de façon à éliminer le mou restant en appliquant de petites pressions sur la touche « Power in » (enrouler) de la télécommande jusqu'à ce que le mou soit minime sur le câble du treuil.

Surcharge/surchauffe

Ce treuil est conçu pour un service intermittent. Lorsque le moteur est sur le point de caler, une accumulation rapide de chaleur se produit et peut endommager le moteur.

Le câblage double (voir *le manuel de base des techniques de treuillage*) permet de réduire le débit en ampères et de réduire ainsi l'accumulation de chaleur dans le moteur. Cela permet une utilisation continue prolongée.

TI Indicateur de température du moteur

Lorsque le moteur atteint une température pouvant entraîner des dommages si le treuil fonctionne pendant longtemps, le voyant de la télécommande clignote. Une utilisation de courte durée lorsque la DEL clignote n'endommagera pas le treuil. Évitez les longues périodes de fonctionnement.

ÉTIREMENT DU CÂBLE

La durée de vie d'un câble est liée directement à son entretien et à son utilisation. Lors de sa première utilisation, un câble neuf doit être enroulé sur son tambour sous une charge d'au moins 454 kg .

Suivre simplement les directives suivantes pour étirer correctement le câble sur le tambour.

1) Choisir un emplacement PLAT ET DE NIVEAU suffisamment grand pour pouvoir dérouler le câble sur toute sa longueur.

2) Mettre le levier d'embrayage du treuil en position « Free Spool » (déroulement en roue libre). Dérouler le câble de façon à ne laisser que 5 spires sur le tambour. Une fois le câble déroulé, mettre le levier d'embrayage du treuil en position « Engaged » (en prise).

3) Fixer le crochet du câble à un point d'ancrage approprié et éloigner le véhicule du point d'ancrage jusqu'à ce qu'il n'y ait presque plus de mou dans le câble. Avant de descendre du véhicule, serrer le frein à main et mettre le véhicule en prise ou en position de stationnement, puis couper le moteur.

4) Brancher la télécommande au treuil. Se tenir à environ 2,44 m du treuil et enrouler le câble sur le tambour du treuil jusqu'à éliminer complètement le mou du câble. Déconnecter la télécommande du treuil. Maintenir le câble tendu d'une main ; pousser avec précaution le câble d'acier vers le côté du tambour auquel le câble est fixé de façon à ce qu'il n'y ait pas d'espace entre les spires sur le tambour. S'assurer que le câble d'acier s'enroule sur le bas du

⚠AVERTISSEMENT
Toujours garder les mains éloignées du câble du treuil, de la boucle du crochet, du crochet et de l'ouverture du guide-câble durant l'installation et l'utilisation de l'appareil et l'enroulement ou le déroulement du câble.

⚠AVERTISSEMENT
Ne jamais toucher le câble du treuil ou le crochet lorsqu'une autre personne est à l'interrupteur de commande ou durant le fonctionnement du treuil.

⚠AVERTISSEMENT
Toujours porter des gants de cuir épais durant la manipulation du câble du treuil.

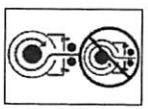

⚠AVERTISSEMENT
Toujours utiliser le cordon du crochet fourni pour enrouler ou dérouler le câble, durant l'installation ou l'utilisation pour éviter de se blesser les mains ou les doigts.

⚠AVERTISSEMENT
Toujours étirer au préalable le câble et l'enrouler sous charge avant de l'utiliser. Un câble enroulé de manière serrée réduit le risque qu'il coince et soit endommagé.

⚠AVERTISSEMENT
Ne jamais toucher le câble ou le crochet lorsqu'une autre personne manipule l'interrupteur de commande ou durant le fonctionnement du treuil.

⚠AVERTISSEMENT
Ne jamais utiliser le treuil avec moins de 5 spires de câble enroulées autour du tambour Le câble pourrait se dérouler du tambour, étant donné que l'ancrage du câble n'est pas conçu pour retenir une charge.

ÉTIREMENT DU CÂBLE (suite)

tambour et non sur le haut, sinon le frein de retenue automatique de la charge ne fonctionnera pas correctement. (Si le câble d'acier s'enroule sur le haut, cela signifie que l'on a actionné le treuil en mode de déroulement et non d'enroulement au moyen de la télécommande).

5) Par mesure de sécurité, les étapes suivantes devraient être effectuées par deux personnes. Si l'on tente de tendre le câble tout seul, s'assurer de toujours mettre le frein à main, la transmission en prise et d'éteindre le moteur du véhicule chaque fois que l'on descend du véhicule pour inspecter le câble du treuil. Ne jamais quitter le véhicule alors que le câble du treuil porte une charge. Le tensionnement du câble est essentiel pour assurer une longue durée de vie au produit. Le tensionnement du câble empêchera les couches extérieures du câble de pincer et déformer les couches intérieures.

6) Prendre soin d'enrouler chaque couche de manière uniforme afin d'éviter d'endommager le câble.

7) Faire passer la télécommande par la fenêtre du conducteur afin de l'utiliser. Demander à l'assistant de s'éloigner du véhicule et du câble. L'assistant doit indiquer si le câble s'enroule correctement à mesure qu'il défile sur le guide-câble et s'enroule. Démarrer le véhicule et mettre la transmission au point mort. Desserrer le frein à main tout en appuyant modérément sur la pédale de frein. Appuyer sur la touche « Power in » (enrouler) de la télécommande. Effectuer le treuillage sur environ 2 m, puis arrêter. Relâcher lentement la pédale de frein, puis serrer le frein à main. Cela permet d'assurer qu'il n'y a aucune charge sur le câble. Mettre le levier de vitesse en position de stationnement ou en prise, puis couper le moteur. Descendre du véhicule et inspecter le treuil pour s'assurer que le câble est enroulé uniformément sur le tambour du treuil et qu'il ne creuse pas la couche inférieure. Si c'est le cas, dérouler le câble et répéter cette étape à partir du début en appliquant davantage de pression sur la pédale de frein.

8) Après s'être assuré que le câble s'enroule correctement sur le tambour, répéter l'étape six jusqu'à ce que le véhicule soit à moins de 2 m du point d'ancrage. Une fois la distance atteinte, relâcher lentement la pédale de frein puis serrer le frein à main. Cela permet d'assurer qu'il n'y a aucune charge sur le câble. Mettre le levier de vitesse en position de stationnement ou en prise, puis couper le moteur. Descendre du véhicule. Décrocher le crochet du point d'ancrage. Tout en retenant le cordon du crochet fourni, maintenir la tension sur câble et enrouler lentement le treuil par de petites pressions sur l'interrupteur de commande jusqu'à ce que le crochet soit à moins de 1 m du guide-câble. Arrêter le treuillage et fixer le crochet sur un point d'ancrage approprié sur le véhicule.

NE PAS LAISSER PAS LE CROCHET ATTEINDRE LE GUIDE-CÂBLE. Cela pourrait endommager le guide-câble. Une fois le crochet fixé correctement au véhicule, enrouler le câble de façon à éliminer le mou restant en appliquant de petites pressions sur la touche « Power in » (enrouler) de la télécommande jusqu'à ce que le mou soit minime sur le câble du treuil.

Cabrestante
Guía de instalación y del usuario

En cada situación donde se utiliza un cabrestante existe la posibilidad de ocasionar daños personales. Para reducir al mínimo ese riesgo, es importante que lea esta guía y la *Guía básica de técnicas para el uso del cabrestante* atentamente. Por favor, familiarícese con la operación del cabrestante antes de usarlo y tenga siempre presente la seguridad. En esta guía se establecen muchas de las reglas de seguridad para el uso del cabrestante. Lea la *Guía básica de técnicas para el uso del cabrestante* para obtener más información sobre su cabrestante y técnicas de maniobrado adecuadas. Recuerde que debido a que cada situación en la que se utiliza el cabrestante es diferente, es muy importante el buen juicio y un enfoque constante en la seguridad.

ÍNDICE:

SEGURIDAD

Índice de símbolos 24

Precauciones generales de seguridad 25-27

Condiciones de trabajo seguras 28

INSTRUCCIONES

Montaje de cabrestante 29

Conexiones eléctricas 30

Instrucciones de operación 31-32

Estiramiento del cable 32-33

Warn Industries Inc.
12900 SE Capps Road
Clackamas, OR 97015
EE.UU.

Servicio de atención al cliente: (800) 543-WARN (9276)
Desde fuera de EE.UU.: (503) 722-1200
Fax: (503) 722-3000

WARN® y el logotipo de WARN son marcas comerciales registradas de Warn Industries, Inc.
©2011 Warn Industries, Inc.

www.warn.com

ÍNDICE DE SÍMBOLOS

SÍMBOLO	EXPLICACIÓN
	Lea el manual de instrucciones
	Lleve puesta siempre protección ocular y auditiva
	Nunca utilice el cabrestante como si fuese una grúa
	Fije de forma apropiada la carga en la garganta del gancho
	Enrolle el cable en la parte inferior del tambor
	Peligro de aplastamiento de los dedos o la guía del cable
	Peligro de perforación o corte en las manos
	Peligro de explosión o rotura
	Peligro de borde afilado
	Use hook larger than 1/2" (13mm)

SÍMBOLO	EXPLICACIÓN
	Lleve puestos siempre guantes de cuero
	No lo use para desplazar personas
	Use siempre la correa del gancho suministrada
	No aplique nunca una carga a la punta del gancho o al seguro
	Nunca enrolle el cable en la parte superior del tambor
	Punto de pellizco de la guía del cable
	Peligro de superficie caliente
	Peligro de incendio y quemaduras
	Peligros asociados con partes móviles

Advertencias y precauciones

Al leer estas instrucciones, verá ADVERTENCIAS, PRECAUCIONES, AVISOS y NOTAS. Cada mensaje tiene un propósito específico. Las ADVERTENCIAS son mensajes de seguridad que indican que está ante una situación potencialmente peligrosa que, si no se evita, puede resultar en lesiones graves o la muerte. Las PRECAUCIONES son mensajes de seguridad que indican una situación de posible peligro que, si no se evita, puede resultar en lesiones menores o de poca gravedad. Las PRECAUCIONES pueden alertar también contra prácticas no seguras. Las PRECAUCIONES y ADVERTENCIAS identifican el peligro, indican cómo evitarlo y advierten de las posibles consecuencias si no se evita tal peligro. Los AVISOS son mensajes para evitar daños a la propiedad. Las NOTAS son información adicional que le ayudarán a llevar a cabo un procedimiento. **¡TRABAJE SIEMPRE DE FORMA SEGURA!**

ADVERTENCIA

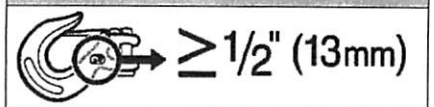

PELIGRO DE ENREDO EN LAS PARTES MÓVILES

De no seguirse estas instrucciones, podrían producirse lesiones graves o incluso la muerte.

- Use siempre un gancho marcado con 13 mm (1/2 pulg) o mayor con la guía M15000 y la 16.5ti.
- Verifique **siempre** que el seguro del gancho está cerrado y que no soporta carga.
- No aplique **nunca** una carga a la punta del gancho o al seguro. Aplique la carga únicamente al centro del gancho.
- No use **nunca** un gancho cuya abertura haya aumentado o cuya punta esté doblada o retorcida..
- Utilice **siempre** un gancho con seguro.
- Mantenga **siempre** el cable del control remoto y el cable de alimentación alejados del tambor, el cable y el cordaje. Inspeccione la posible existencia de grietas, pellizcos, cables deshilachados o conexiones sueltas. Los componentes dañados deberán reemplazarse antes de la operación.

ADVERTENCIA

PELIGRO DE ENREDO EN LAS PARTES MÓVILES

De no seguirse estas instrucciones, podrían producirse lesiones graves o incluso la muerte.

Seguridad general:

- Conozca **siempre** el funcionamiento del cabrestante. Lea detenidamente las Instrucciones, la Guía de operación y/o la Guía básica de técnicas del cabrestante para comprender el funcionamiento y la manipulación del cabrestante.
- No exceda **nunca** la capacidad nominal del cabrestante ni del cable del cabrestante. Emplee un cable doble con una polea para reducir la carga del cabrestante.
- Lleve puestos **siempre** guantes gruesos de cuero para manipular el cable del cabrestante.
- No use **nunca** el cabrestante o el cable del cabrestante para remolcar. Un golpe a las cargas puede dañar, sobrecargar o romper el cable.
- No utilice **nunca** el cabrestante para amarrar una carga.
- No ponga **nunca** en funcionamiento este cabrestante si se encuentra bajo los efectos de drogas, alcohol o medicamentos..
- **Nunca** opere este cabrestante si es menor de 16 años de edad.
- Asegúrese **siempre** de que el operador y otras personas sean conscientes de la estabilidad del vehículo y/o la carga.
- Pase **siempre** el control remoto a través de una ventana cuando lo utilice en un vehículo.

Seguridad en la instalación:

- Elija **siempre** una ubicación de montaje que sea lo suficientemente sólida para soportar la capacidad de carga máxima del cabrestante.
- Utilice **siempre** piezas de grado 5 (grado 8,8 milimétrico) o superior.
- No suelde **nunca** los pernos de montaje.
- Use **siempre** piezas de montaje, componentes y accesorios aprobados por el fabricante.
- No utilice **nunca** pernos que sean demasiado largos.
- Complete **siempre** la instalación del cabrestante y el acoplamiento del gancho antes de instalar el cableado.
- Mantenga **siempre** las manos alejadas del cable del cabrestante, del bucle del gancho, del gancho y de la abertura de la guía durante la instalación, la operación, y en el enrollado y desenrollado.
- Ponga **siempre** la guía del cable con la etiqueta de advertencia visible en la parte superior.
- Realice **siempre** un estiramiento previo del cable y vuelva a enrollarlo con carga antes de usarlo. Un cable bien enrollado reduce las posibilidades de tener "dobleces" que puedan dañar el cable.

ADVERTENCIA

PELIGRO DE ENREDO EN LAS PARTES MÓVILES

De no seguirse estas instrucciones, podrían producirse lesiones graves o incluso la muerte.

Seguridad durante la operación del cabrestante:

- Inspeccione **siempre** el cable del cabrestante, el gancho y las eslingas antes de poner el cabrestante en funcionamiento. Si el cable del cabrestante está deshilachado, retorcido o dañado, deberá reemplazarse de inmediato. Los componentes dañados deberán reemplazarse antes de la operación. Evite que las piezas resulten dañadas.
- Retire **siempre** cualquier elemento u obstáculo que pueda provocar inseguridad en la operación del cabrestante.
- Verifique **siempre** que el anclaje seleccionado soportará la carga y que la correa o la cadena no se deslizará.
- Use **siempre** la correa suministrada con el gancho cuando vaya a enrollar o desenrollar el cable del cabrestante, durante la instalación y durante la operación.
- Requiera **siempre** a los operadores y las personas presentes que estén atentos al vehículo y/o la carga.
- Tenga **siempre** presente la estabilidad del vehículo y de la carga durante el uso del cabrestante; haga que las personas presentes se mantengan alejadas. Alerte a todas las personas presentes de una posible inestabilidad.
- **Siempre** enrolle tanto cable como sea posible al prepararse para el maniobrado. Emplee un cable doble o elija un punto de anclaje distante.
- Tómese **siempre** su tiempo para asegurar la carga con técnicas apropiadas antes de arrastrarla con el cabrestante.
- No toque **nunca** el cable del cabrestante ni el gancho si hay alguien cerca del interruptor de control, o si el cabrestante está en funcionamiento.
- **Nunca** embrague ni desembrague si el cabrestante está soportando una carga, si el cable está en tensión o si el tambor está en movimiento.
- No toque **nunca** el cable del cabrestante ni el gancho mientras están tensos o con carga.
- Manténgase **siempre** alejado del cable del cabrestante y de la carga, y no deje que otros se acerquen cuando el cabrestante esté en funcionamiento.
- No use **nunca** un vehículo para tirar de la carga en el cable del cabrestante La carga combinada o un golpe en la carga puede dañar, sobrecargar o romper el cable.
- No enrolle **nunca** el cable del cabrestante sobre sí mismo. Utilice una cadena o un cable de estrangulación, o un protector de tronco de árbol en el anclaje.

ADVERTENCIA

PELIGRO DE CAÍDA O APLASTAMIENTO

De no seguirse estas instrucciones, podrían producirse lesiones graves o incluso la muerte.

- **Siempre** manténgase usted, las manos y a otros alejados.
- No accione **nunca** accione el cabrestante si no hay, al menos, 5 vueltas de cable alrededor del tambor. El cable podría soltarse del tambor, ya que el acoplamiento del cable al tambor no está construido para aguantar cargas.
- No use **nunca** el cabrestante como grúa o para suspender una carga.
- Compruebe **siempre** que el anclaje soportará la carga. Utilice técnicas de maniobrado adecuadas y tómese tiempo para operar de forma correcta.
- No utilice **nunca** el cabrestante para levantar o desplazar personas..
- **Nunca** realice esfuerzos excesivos para enrollar el cable del cabrestante.
- Utilice **siempre** posturas y técnicas de levantamiento adecuadas o solicite ayuda a la hora de manipular e instalar el producto.
- Enrolle y desenrolle el cable del tambor **siempre** en la dirección especificada en la etiqueta de advertencia del cabrestante o en la documentación. Esto es necesario para el funcionamiento correcto del freno automático (si viene equipado con ello).
- **Siempre** enrolle el cable del cabrestante alrededor del tambor en el sentido indicado por la marca de rotación del cabrestante.

ADVERTENCIA

PELIGRO DE CORTES Y QUEMADURAS

De no seguirse estas instrucciones, podrían producirse lesiones graves o incluso la muerte.

Para evitar daños en las manos:

- Lleve puestos **siempre** guantes gruesos de cuero para manipular el cable del cabrestante.
- Tenga **siempre** en cuenta que las superficies del motor, del tambor o del cable del cabrestante pueden estar calientes durante o después del uso del mismo.

ADVERTENCIA

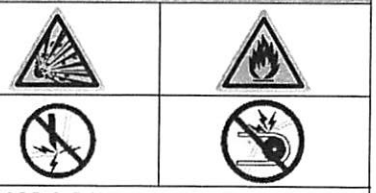

PELIGRO DE INCENDIO O POR PRESENCIA DE PRODUCTOS QUÍMICOS

De no seguirse estas instrucciones, podrían producirse lesiones graves o incluso la muerte.

- No lleve **nunca** puestas joyas, y lleve siempre protección ocular.
- No pase **nunca** los cables eléctricos por bordes agudos.
- No pase **nunca** los cables eléctricos cerca de piezas que se calienten.
- No pase **nunca** los cables eléctricos por partes móviles o cerca de ellas.
- Coloque **siempre** las fundas de terminales suministradas en los cables y los terminales, tal como se indica en las instrucciones de instalación.
- No se apoye **nunca** en la batería si está haciendo conexiones.
- No pase **nunca** los cables eléctricos sobre los terminales de la batería.
- No acorte **nunca** los terminales de la batería con objetos metálicos.
- Si va a perforar, verifique **siempre** que en el área no haya tuberías o tanques de combustible, tuberías de sistema de frenado, cables eléctricos, etc.
- Consulte **siempre** el manual del usuario para obtener detalles de cableado adecuados.
- Aísle y proteja **siempre** los cables y los terminales eléctricos que queden expuestos.

PRECAUCIÓN

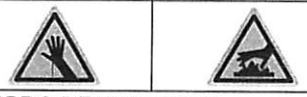

PELIGRO DE CORTES Y QUEMADURAS

De no seguirse estas instrucciones, podrían producirse lesiones menores o moderadas.

- **Nunca** deje que el cable del cabrestante se deslice por sus manos.

PRECAUCIÓN

PELIGRO DE ENREDO EN LAS PARTES MÓVILES

De no seguirse estas instrucciones, podrían producirse lesiones menores o moderadas.

Para evitar daños en las manos:

- No deje **nunca** el control remoto donde pueda activarse durante el enrollado libre, maniobrado o cuando el cabrestante no esté en uso.
- No deje **nunca** el control remoto del cabrestante conectado cuando se esté instalando o haciendo enrollado libre, maniobras o mantenimiento ni cuando no se esté utilizando el cabrestante.

AVISO

EVITE DAÑOSAL EQUIPO Y AL CABRESTANTE

- Evite **siempre** los tirones laterales, ya que pueden apilar el cable en un extremo del tambor. Esto puede dañar el cable del cabrestante o el cabrestante.
- Compruebe **siempre** que se ha embragado o desembragado completamente.
- Sea precavido **siempre** para no dañar la estructura cuando vaya a anclar su vehículo en una operación con el cabrestante.
- No sumerja **nunca** el cabrestante en agua.
- Guarde **siempre** el control remoto en un área protegida, limpia y seca.

⚠ ADVERTENCIA
Siempre manténgase usted, las manos y a otros alejados.

⚠ ADVERTENCIA
Requiera **siempre** a los operadores y las personas presentes que estén atentos al vehículo y/o la carga.

⚠ PRECAUCIÓN
No deje **nunca** el control remoto donde pueda activarse durante el enrollado libre, el maniobrado o cuando el cabrestante no esté en uso.

AVISO
No sumerja **nunca** el cabrestante en agua.

CONDICIONES DE TRABAJO SEGURAS

Cuando desplace una carga, el operador debe hacerlo siempre desde una posición segura. Las áreas seguras son: (1) perpendiculares al cable de tracción o (2) el interior del vehículo con la capota subida (si el cabrestante está montado delante del vehículo). Estas posiciones seguras ayudan a evitar que el cable alcance al operador si dicho cable no aguanta la carga y se rompe.

Siempre que sea posible, accione el cabrestante desde la longitud total del cable del control remoto. El usuario debe situarse siempre a 2,44 m (8 pies), por lo menos, del cabrestante. Esto evitará que se enganche con la guía y le situará fuera del alcance de cualquier latigazo del cable durante el desplazamiento de la carga.

No trabaje nunca cerca del cable de tracción cuando el cabrestante lleve carga.

Emisiones acústicas

El cabrestante está diseñado de tal forma que las emisiones acústicas audibles desde el emplazamiento del operador no superen los 70 dBa. El usuario debe situarse a 2,44 m (8 pies), por lo menos, del cabrestante. Si el cabrestante excede 70 dBa desde el lugar donde se encuentra el usuario, llévelo a un centro de servicio autorizado para ser inspeccionado.

Limpieza

No aplicar directamente agua a presión (limpiadores a presión, lavadores de coches, etc.) entre el soporte y el reborde del tambor o la palanca del embrague.

Utilice agua a baja presión y una bayeta o esponja enjabonada para limpiar el cabrestante.

Evite utilizar productos químicos que puedan dañar el acabado.

Limpie totalmente los residuos de sal en el cabrestante, tan pronto como sea posible, para reducir al mínimo la posibilidad de corrosión.

Mantenimiento

Nunca será necesario la lubricación del cabrestante a no ser que éste se haya sumergido en agua. Si esto ocurre, se deberá llevar lo antes posible a un centro autorizado de servicio para evitar daños de corrosión. Si sumerge el sistema de control, éste debe ser reemplazado cuando se realice el servicio del cabrestante.

Revise los cables de la batería y las conexiones eléctricas cada 90 días a fin de asegurarse de que estén limpios y bien apretados.

Inspeccione el cable de tiro antes y después de cada operación efectuada con el cabrestante. Cuando se dañe, reemplácelo con el tamaño especificado en la Lista de piezas de repuesto o visite el sitio Web de Warn en www.warn.com.

El cable debe enrollarse alrededor del tambor en el sentido que indica la marca de rotación que hay en el cabrestante.

MONTAJE DE CABRESTANTE

Elija un lugar de montaje que sea lo suficientemente resistente como para soportar las cargas que desee desplazar. Para garantizar un funcionamiento seguro del cabrestante, utilice sólo las orientaciones de montaje recomendadas. Cualquier otra orientación de montaje es incorrecta e inadecuada. El uso de las combinaciones recomendadas de arandelas de presión y pernos, aplicando los niveles de apriete recomendados, evita las vibraciones durante el accionamiento. Los detalles del montaje indican los niveles adecuados del par de torsión.

Recuerde que el cable del cabrestante debe enrollarse alrededor del tambor en el sentido indicado por la marca de rotación.

Patrón de los pernos de montaje:
254 mm x 114,3 mm 10 x 4,5 pulg

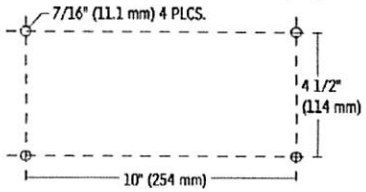

Detalles de montaje:

(1) Suave y llana, grosor = 5/16 de pulgada (8 mm)
(2) 7/16 de pulgada (11,1 mm) arandela de bloqueo X 4
(3) 7/16-14 X 1 1/2 de pulgadas de largo, perno de calibre 5 X 4 par de torsión 50-55 pies libras (68-75 Nm).
(4) 7/16 de pulgada (11,1 mm) arandela de plana x 6
(5) 7/16-14 X 1 3/4 de pulgadas de largo, perno de calibre 5 X 2 par de torsión 50-55 pies libras (68-75 Nm).

Consulte los diagramas siguientes para obtener orientación adecuada sobre montaje.

Instalación del paquete de control

El montaje del paquete de control se debe realizar de acuerdo a las instrucciones incluidas en el conjunto del sistema de montaje de WARN. Utilice el soporte que se incluye en el paquete.

Para una mayor flexibilidad en el montaje, los aseguradores de montaje del paquete de control también pueden moverse hacia los agujeros no utilizados de la placa de la base del paquete de control.

Grosor de la placa	Longitud del perno
7 mm (1/4 pulg.)	40 mm (1,5 pulg.)
10 mm (3/8 pulg.)	40 mm (1,5 pulg.)
13 mm (1/2 pulg.)	45 mm (1,75 pulg.)

⚠ ADVERTENCIA
Elija **siempre** una ubicación de montaje que sea lo suficientemente sólida para soportar la capacidad de carga máxima del cabrestante.

⚠ ADVERTENCIA
Complete **siempre** la instalación del cabrestante y el acoplamiento del gancho antes de instalar el cableado.

⚠ ADVERTENCIA
No utilice **nunca** pernos que sean demasiado largos.

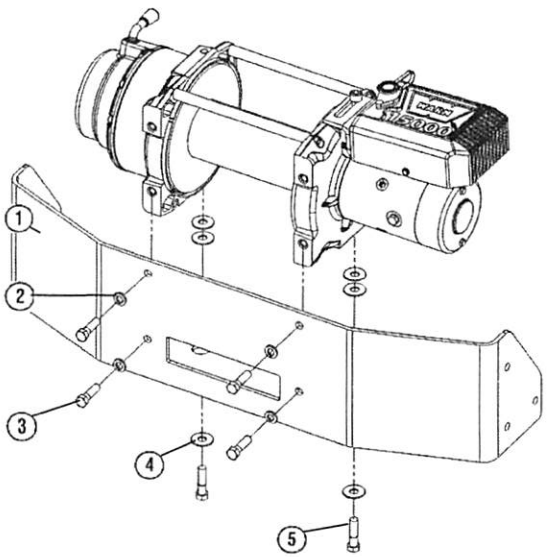

⚠ ADVERTENCIA
No pase **nunca** los cables eléctricos por bordes afilados.

⚠ ADVERTENCIA
No pase **nunca** los cables eléctricos cerca de piezas que se calienten.

⚠ ADVERTENCIA
No pase **nunca** los cables eléctricos por partes móviles o cerca de ellas.

⚠ ADVERTENCIA
Coloque **siempre** las fundas de terminales suministradas en los cables y los terminales, tal como se indica en las instrucciones de instalación.

⚠ ADVERTENCIA
Aísle y proteja **siempre** los cables y los terminales eléctricos que queden expuestos.

CONEXIONES ELÉCTRICAS

Utilice los manguitos aislantes provistos en las conexiones expuestas a fin de evitar cortocircuitos. No instale los cables de la batería donde puedan desgastarse debido al roce o sufrir cortes en el material aislante produciéndose así un cortocircuito.

Cuando haya finalizado la instalación, compruebe si el cabrestante funciona correctamente.

Diagramas eléctricos:

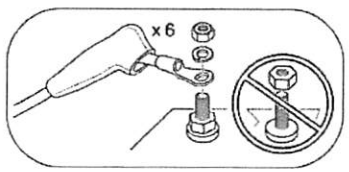

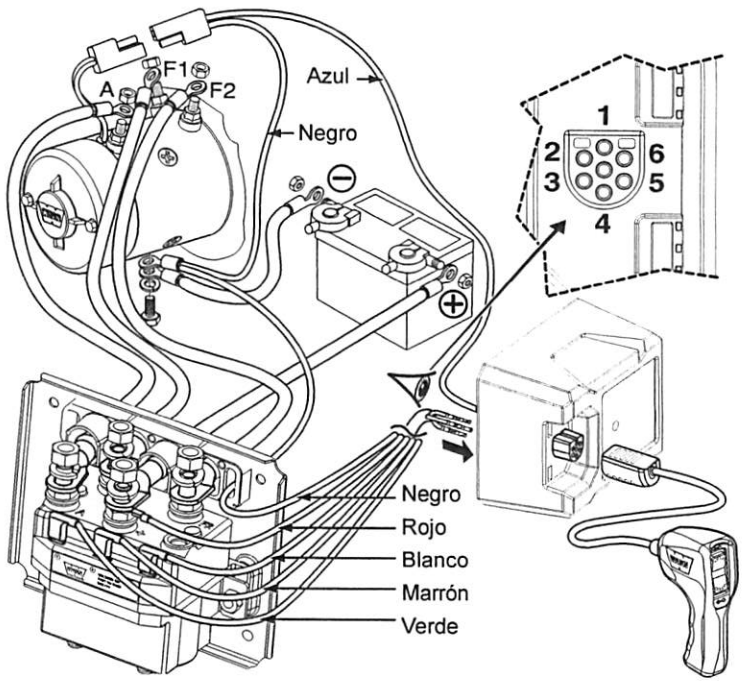

Recomendaciones para la batería

Una batería completamente cargada y unas conexiones correctas resultan esenciales para el buen funcionamiento del cabrestante. El requisito mínimo para una batería de 12 voltios de CC es de 650 amperios para el arranque en frío.

Pasador #	Color
1	Marrón
2	Verde
3	Negro
4	Blanco
5	Azul
6	Rojo

Interruptor del control remoto

No deje el control remoto conectado al cabrestante cuando no se esté utilizando. El dejar el control enchufado puede producir una situación peligrosa o desgastar la batería.

Control remoto vertical/ horizontal:

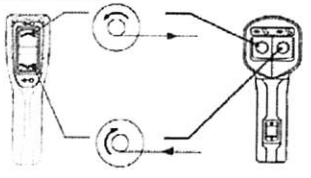

Accionamiento del embrague

Cuando el embrague está activado, el sistema de engranajes se acopla al tambor del cable y, en estas condiciones, puede transferirse movimiento desde el motor del cabrestante. Cuando el embrague está desembragado se encuentra en posición de enrollado libre y el sistema de engranajes y el tambor del cable están desengranados, lo que permite que el tambor gire libremente.

La palanca del embrague, ubicada en la cubierta del cabrestante, enfrente del motor, controla la posición del embrague. Para evitar daños, engrane y desengrane siempre completamente la palanca del embrague.

Desembragado:

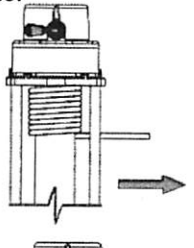

Embragado:

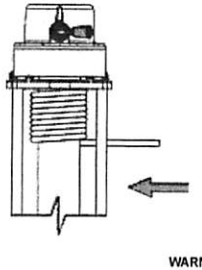

Desenrollado

Generalmente, el desenrollado manual es la forma más rápida y sencilla de desenrollar el cable. Antes de proceder al desenrollado manual, saque suficiente cable a fin de eliminar cualquier tensión a la que pueda estar sometido el mismo. Quite el embrague. A continuación, proceda al desenrollado manual, sacando manualmente suficiente cable para la operación. Consulte la *Guía básica de técnicas para el uso del cabrestante* para obtener más información.

Deje siempre al menos 5 vueltas de cable alrededor del tambor.

Desenrollado bajo carga

No exceda nunca los límites de tracción del cable del cabrestante.

Enrolle el cable uniformemente y bien tensado alrededor del tambor. Esto evita que las vueltas más externas del cable se hundan en las vueltas internas; asimismo, evita atascamientos y daños al cable.

Evite las sacudidas de la carga cuando esté enrollando; para ello, pulse el interruptor de control a fin de tensar y hacer entrar las porciones del cable que puedan quedar flojas. Las sacudidas de la carga pueden hacer sobrepasar momentáneamente la capacidad nominal del cabrestante y del cable.

Desenrollado sin carga

Enrollado o desenrollado con un ayudante: pida al ayudante que sujete la correa del gancho tensando el cable de forma constante y tanto como sea posible. Manteniendo tenso el cable, el ayudante debe caminar hacia el cabrestante mientras usted acciona el interruptor de control para enrollar el cable. Suelte el interruptor cuando el gancho esté a una distancia mínima de 2 m (6 pies) de la abertura de la guía.

Luego, enrolle la parte final del cable para almacenarlo tal como se indica a continuación.

⚠ ADVERTENCIA

Siempre tómese su tiempo para comprender completamente el cabrestante y su funcionamiento revisando la Guía básica de técnicas de uso del cabrestante que viene con el mismo.

⚠ ADVERTENCIA

Nunca embrague ni desembrague si el cabrestante está soportando una carga, si el cable está en tensión o si el tambor está en movimiento.

⚠ ADVERTENCIA

Nunca accione el cabrestante si no hay, al menos, 5 vueltas de cable alrededor del tambor. El cable podría soltarse del tambor, ya que el acoplamiento del cable al tambor no está construido para aguantar cargas.

AVISO

No desenrolle el cable más de 9 metros sin dejar que el cabrestante se enfríe durante 20 minutos antes de volver a enrollar el cable. En su lugar, coloque el embrague en posición de enrollado libre y tire del cable a mano.

⚠ ADVERTENCIA

Mantenga **siempre** las manos alejadas del cable del cabrestante, del bucle del gancho, del gancho y de la abertura de la guía durante la instalación, la operación, y en el enrollado y desenrollado.

⚠ ADVERTENCIA

No toque **nunca** el cable del cabrestante ni el gancho si hay alguien cerca del interruptor de control, o si el cabrestante está en funcionamiento.

⚠ ADVERTENCIA

Lleve puestos **siempre** guantes gruesos de cuero para manipular el cable del cabrestante.

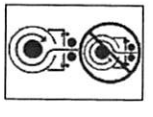

⚠ ADVERTENCIA

Use **siempre** la correa del gancho suministrada cuando vaya a enrollar o desenrollar el cable del cabrestante o durante la instalación o la operación para evitar daños en las manos.

INSTRUCCIONES DE OPERACIÓN Cont.

Enrollado o desenrollado solo: disponga el cable de forma que no se doble ni se trabe al enrollarlo. Asegúrese de que el cable ya enrollado alrededor del tambor esté bien tenso y dispuesto en capas uniformes. Enrolle suficiente cable como para formar la siguiente capa completa en el tambor. Tense y enderece la capa. Repita el proceso hasta que el gancho quede a una distancia mínima de 2 m (6 pies) de la abertura de la guía.

Luego, enrolle la parte final del cable para almacenarlo tal como se indica a continuación.

Enrollado del resto para el almacenamiento

Cuando el gancho se encuentre a 2 m (6 pies) de la guía, desconéctelo del punto de anclaje o carga. Sostenga la correa del gancho (incluida en el producto) y mantenga la tensión en el cable del cabrestante. Enrolle el cabrestante lentamente pulsando el botón de enrollado en el control remoto hasta que el gancho se encuentre a 1 metro (3 pies) de la guía. Pare de enrollarlo y enganche el gancho al punto de anclaje apropiado en el vehículo.

NO PERMITA QUE EL GANCHO TOQUE LA GUIA. Esto podría causar daños a la guía. Una vez que el gancho esté bien acoplado al vehículo, enrolle el resto del cable suelto pulsando el interruptor de enrollado en el control remoto hasta que haya una holgura mínima en el cable.

Sobrecarga/sobrecalentamiento

El cabrestante está indicado para un servicio intermitente. Cuando el motor se aproxima a la velocidad crítica, se genera calor muy rápidamente, lo que puede ocasionar daños al motor.

El maniobrado con línea de doble cable (véase la *Guía básica de técnicas para el uso del cabrestante*) reduce el amperaje de consumo y el recalentamiento del motor. Esto permite un uso continuo más prolongado.

Indicador de temperatura del motor

Cuando el motor alcanza una temperatura que puede dañar el cabrestante al estar éste en funcionamiento un largo periodo de tiempo, la luz del control remoto parpadea. Cortos periodos en funcionamiento con la luz en intermitente no dañará el cabrestante. Se deberán evitar los largos periodos en funcionamiento.

TENSIÓN DEL CABLE

La vida útil del cable está directamente relacionada con la forma en que se utiliza y se cuida. Durante su primer uso, un cable nuevo debe enrollarse en el tambor bajo una carga de, por lo menos, 454 kg (1000 lbs). Siga las instrucciones siguientes para tensar el cable correctamente en el tambor del cabrestante.

1) Escoja una superficie PLANA Y PAREJA que sea lo suficientemente amplia como para poder extender todo el cable.

2) Gire la palanca del embrague del cabrestante hacia la posición "Free Spool" (enrollado libre). Desenrolle el cable del tambor hasta las últimas 5 vueltas. Una vez desenrollado el cable, ponga la palanca del embrague del cabrestante en la posición "Engaged" (embragado).

3) Acople el extremo del cable con gancho a un punto de anclaje apropiado y aleje el vehículo de tal punto hasta que quede muy poco cable suelto. Antes de salir del vehículo, ponga el freno de mano, deje una velocidad puesta o en aparcado (vehículos automáticos) y apague el vehículo.

4) Conecte el control remoto al cabrestante. Desde una distancia de aproximadamente 2,44 metros (8 pies) del cabrestante, enrolle el cable hasta que se halla enrollado todo el cable suelto en el tambor del cabrestante. Desconecte el control remoto del cabrestante. Mantenga la tensión en el cable con una mano; empuje **TENSIÓN**

DEL CABLE cont.
cuidadosamente el cable hacia el lado del tambor al que esté enganchado, de forma que no haya espacios libres en el tambor entre cada vuelta. Verifique que el cable se enrolle en la parte inferior del tambor y no en la superior, ya que, en caso contrario, el freno de carga automático no funcionará correctamente (si el cable se enrolla en la parte superior, habrá desenrollado el cabrestante en lugar de enrollarlo con el control remoto).

5) Para una mayor seguridad, dos personas deberán realizar los pasos siguientes. Si trata de tensar el cable usted solo, verifique siempre que el freno de mano esté puesto, deje una marcha puesta y apague el vehículo cada vez que lo abandone para inspeccionar el cable del cabrestante. No salga nunca del vehículo con una carga aplicada al cable. Tensar el cable es fundamental para garantizar una larga vida útil del mismo. Al tensarse el cable, se evitará que sus capas exteriores pellizquen o deformen las capas interiores.

6) Procure enrollar cada vuelta de forma pareja para evitar daños al cable.

7) Pase el control remoto a través de la ventanilla del conductor para que pueda usarlo el conductor del vehículo. Pida a su ayudante que se ubique en la parte lateral del vehículo, alejado del cable del cabrestante. Él deberá indicarle si el cable se está enrollando correctamente al verlo pasar por la guía. Arranque el vehículo y ponga la transmisión en punto muerto. Suelte el freno de mano mientras presiona moderadamente el pedal del freno. Pulse el botón de enrollar en el control remoto. Después de enrollar aproximadamente 2 metros (6 pies) de cable, pare el enrollado. Lentamente deje de presionar el pedal del freno para aplicar el freno de mano. Esto asegurará que no haya carga en el cable del cabrestante. A continuación, ponga la transmisión en aparcado (vehículos automáticos) o ponga una velocidad con la palanca de cambios y apague el vehículo. Salga del vehículo y asegúrese de que el cable del cabrestante esté enrollándose de forma pareja en el tambor y no hundiéndose en la capa inferior. Si el cable se está hundiendo, desenróllelo y repita este paso desde el principio con más presión en el pedal del freno.

8) Cuando esté convencido de que el cable está enrollándose correctamente en el tambor, repita el paso 6 hasta que el vehículo se encuentre a 2 metros (6 pies) del anclaje del cabrestante. Una vez que esté a 2 metros (6 pies), deje de presionar el pedal del freno lentamente para utilizar el freno de mano. Esto asegurará que no haya carga en el cable del cabrestante. A continuación, ponga la transmisión en aparcado (vehículos automáticos) o ponga una velocidad con la palanca de cambios y apague el vehículo. Salga del vehículo. Desenganche el gancho del punto de anclaje. Mientras que sostiene la correa del gancho (incluida en el producto), mantenga la tensión en el cable del cabrestante y enróllelo lentamente pulsando el interruptor de enrollado en el control remoto hasta que el gancho se encuentre a 1 metro (3 pies) de la guía. Pare de enrollarlo y enganche el gancho al punto de anclaje apropiado en el vehículo.

NO PERMITA QUE EL GANCHO TOQUE LA GUIA. Esto podría causar daños a la guía. Una vez que el gancho esté bien acoplado al vehículo, enrolle el resto del cable suelto pulsando el interruptor de enrollado en el control remoto hasta que haya una holgura mínima en el cable.

⚠ ADVERTENCIA
Realice siempre un estiramiento previo del cable y vuelva a enrollarlo con carga antes de usarlo. Un cable bien enrollado reduce las posibilidades de tener "dobleces" que puedan dañar el cable.

⚠ ADVERTENCIA
No toque **nunca** el cable ni el gancho si hay alguien cerca del interruptor de control, o si el cabrestante está en funcionamiento.

⚠ ADVERTENCIA
Nunca accione el cabrestante si no hay, al menos, 5 vueltas de cable alrededor del tambor. El cable podría soltarse del tambor, ya que el acoplamiento del cable al tambor no está construido para aguantar cargas.

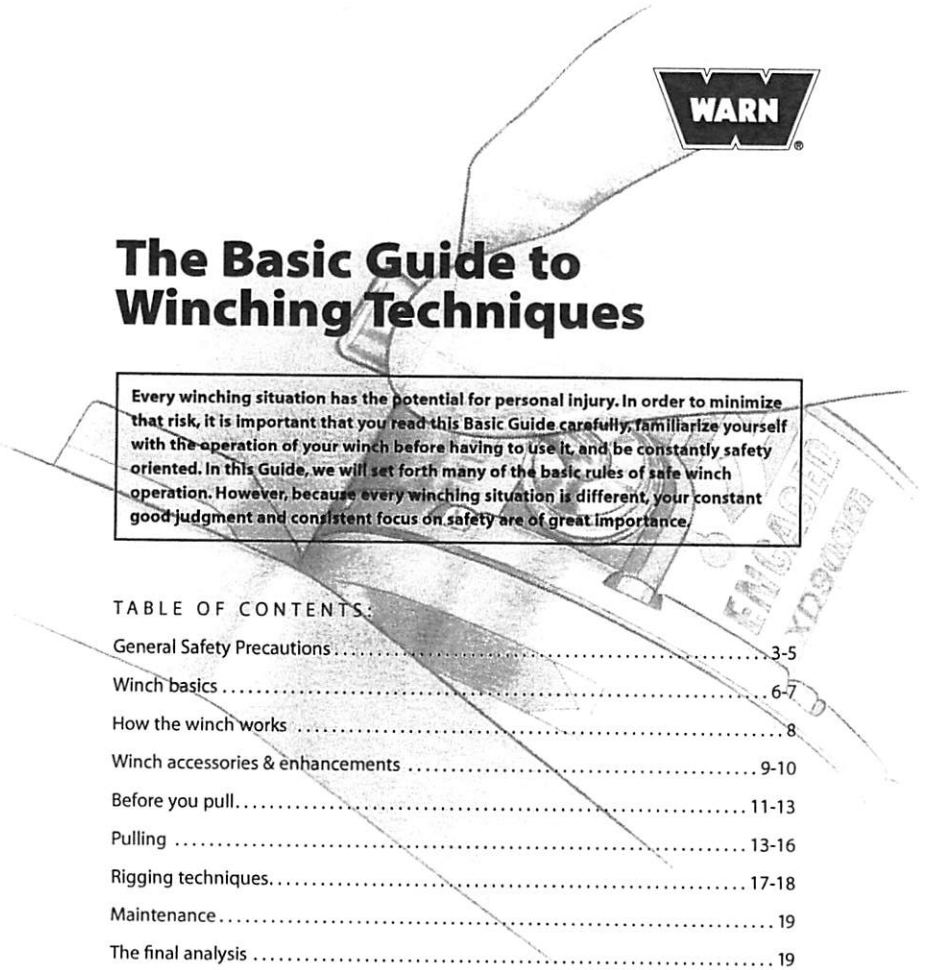

The Basic Guide to Winching Techniques

Every winching situation has the potential for personal injury. In order to minimize that risk, it is important that you read this Basic Guide carefully, familiarize yourself with the operation of your winch before having to use it, and be constantly safety oriented. In this Guide, we will set forth many of the basic rules of safe winch operation. However, because every winching situation is different, your constant good judgment and consistent focus on safety are of great importance.

TABLE OF CONTENTS:

General Safety Precautions 3-5

Winch basics 6-7

How the winch works 8

Winch accessories & enhancements 9-10

Before you pull 11-13

Pulling 13-16

Rigging techniques 17-18

Maintenance 19

The final analysis 19

WARN INDUSTRIES OFF-ROAD PRODUCTS

12900 S.E. Capps Road
Clackamas, OR 97015-8903 USA

Customer Service: 1-800-543-WARN
Fax: 1-503-722-3000

www.warn.com

62885 Rev A2

As you read these instructions, you will see WARNINGS, CAUTIONS, NOTICES and NOTES. Each message has a specific purpose. WARNINGS are safety messages that indicate a potentially hazardous situation, which, if not avoided could result in serious injury. CAUTIONS are safety messages that indicate a potentially hazardous situation which, if not avoided, may result in minor or moderate injury. A CAUTION may also be used to alert against unsafe practice. CAUTIONS and WARNINGS identify the hazard, indicate how to avoid hazard, and advise of the probable consequence of not avoiding the hazard. NOTICES are messages to avoid property damage. NOTES are additional information to help you complete a procedure. **PLEASE WORK SAFELY!**

WARNING

MOVING PARTS ENTANGLEMENT HAZARD

Failure to observe these instructions could lead to severe injury or death.

To avoid injury to hands or fingers.

- **Always** keep hands clear of wire rope, hook loop, hook and fairlead opening during installation, operation, and when spooling in or out.
- **Always** use extreme caution when handling hook and wire rope during spooling operations.
- **Always** use supplied hook strap whenever spooling wire rope in or out, during installation or operation to avoid injury to hands or fingers.

WARNING

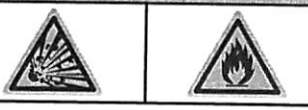

CHEMICAL AND FIRE HAZARD

Failure to observe these instructions could lead to severe injury or death.

- **Always** remove jewelry and wear eye protection.
- **Never** lean over battery while making connections.
- **Always** verify area when drilling is clear of fuel lines, fuel tank, brake lines, electrical wires, etc
- **Never** route electrical cables:
  - Across any sharp edges.
  - Through or near moving parts.
  - Near parts that become hot.
- **Always** insulate and protect all exposed wiring and electrical terminals.
- **Always** install terminal boots as directed in installation instructions.

WARNING

FALLING OR CRUSHING HAZARD

Failure to observe these instructions could lead to severe injury or death.

- **Never** use as an overhead hoist, or to suspend a load.
- **Never** use to lift or move persons.

⚠ CAUTION

MOVING PARTS ENTANGLEMENT HAZARD

Failure to observe these instructions could lead to minor or moderate injury.

General Safety:

- **Always** Know Your Winch: Take time to fully read and understand the included Installation and Operations guide, and Basic Guide to Winching Techniques, in order to understand your winch and the winching operation.
- **Never** operate this winch if you are under 16 years of age.
- **Never** operate this winch when under the influence of drugs, alcohol or medication.
- **Never** exceed winch or wire rope rated capacity. Double line using a snatch block to reduce winch load.

Installation Safety:

- **Always** choose a mounting location that is sufficiently strong to withstand the maximum pulling capacity of your winch.
- **Always** use factory approved switches, remote controls, accessories and installation components.
- **Always** use grade 5 or better hardware, never weld bolts and never use longer bolts than those supplied from factory.
- **Always** complete winch mounting and attachment of hook to hook loop before wiring winch during installation.
- **Always** position fairlead with WARNING label on top.
- **Always** spool the wire rope onto the drum as indicated by the drum rotation label on the winch. Required for automatic brake to work (if winch is so equipped) and for correct installation orientation.
- **Always** prestretch wire rope and respool under load before use. Tightly wound wire rope reduces chances of "binding", which is wire rope working it's way down into a loosely wound wire rope layer, and catching or damaging itself.

⚠ CAUTION

MOVING PARTS ENTANGLEMENT HAZARD

Failure to observe these instructions could lead to minor or moderate injury.

Winching Safety:

- **Always** inspect winch installation and wire rope condition before operating winch. Frayed, kinked or damaged wire rope must be replaced immediately. Loose or damaged winch installation must be corrected immediately.
- **Never** leave remote control plugged into winch while free spooling, rigging, or sitting idle.
- **Never** hook wire rope back onto itself. This damages the wire rope. Always use a choker chain, wire choker rope or tree trunk protector on the anchor.
- **Always** prior to winching, remove any element that may interfere with safe winch operation.
- **Always** take your time when rigging for a winch pull.
- **Always** be certain the anchor you select will withstand the load, and the strap or chain will not slip.
- **Never** engage or disengage clutch if winch is under load, wire rope is in tension or wire rope drum is moving.
- **Always** unspool as much wire rope as possible when rigging. Double line or pick distant anchor point.
- **Never** winch with less than 5 wraps of wire rope around the drum, the wire rope could come loose from the drum.
- **Always** stand clear of wire rope and load during operation.
- **Never** touch wire rope or hook while in tension or under load.
- **Never** touch wire rope or hook while someone else is at the control switch or during winching operation.
- **Never** touch wire rope or hook while remote control is plugged into winch.
- **Always** stand clear of wire rope and load and keep others away while winching.

⚠ CAUTION

MOVING PARTS ENTANGLEMENT HAZARD

Failure to observe these instructions could lead to minor or moderate injury.

Winching Safety:

- **Always** require operator and bystanders to be aware of stability during winching of vehicle and/or load.
- **Always** keep remote control lead clear of the drum, wire rope and rigging. Inspect for cracks, pinches, frayed wires or loose connections. Replace if damaged.
- **Always** pass remote control through a window to avoid pinching lead in door, when using remote inside a vehicle.

⚠ CAUTION

CUT AND BURN HAZARD

Failure to observe these instructions could lead to minor or moderate injury.

To avoid injury to hands or fingers:

- **Always** wear heavy leather gloves when handling a wire rope.
- **Never** let wire rope slip through your hands.

To avoid injury to hands or fingers:

- **Always** be aware of possible hot surface at winch motor, drum or wire rope during or after winch use.

NOTICE

AVOID WINCH AND EQUIPMENT DAMAGE

- **Always** avoid continuous side pulls which can pile up wire rope at one end of the drum. This can damage your wire rope or winch.
- **Always** ensure the clutch is fully engaged or disengaged.
- **Never** use winch to tow other vehicles. Shock loads can momentarily exceed capacity of wire rope and winch.
- **Always** use care to not damage your frame when anchoring your vehicle during a winching operation.
- **Never** "jog" wire rope under load. Shock loads can momentarily exceed capacity of wire rope and winch.
- **Never** use winch to secure a load during transport.
- **Never** submerge winch in water.
- **Always** store the remote control in a protected, clean, dry area.

ELECTRIC WINCH BASICS

⚠WARNING
Never operate or install a winch without reading or understanding the operator's manual

So, you have your Warn winch and you're ready to get out on the trails: climb a few boulders, splash a little mud, traverse the occasional stream. Basically, you're ready to explore the backcountry and otherwise have a great time.

Well, if you're smart enough to go prepared with the best, you're probably smart enough to know that to keep having a great time, you need to fully understand your winch and the winching operation.

That's exactly what this guide intends to do: provide you with a basic understanding of your winch and teach you the basics of proper winching techniques. But before we get started, we must emphasize that the information in this guide is general in nature. Because no two situations are alike, it would be nearly impossible to review them all. We can, however, provide you with the general principles and techniques. Then it is up to you to take the time to analyze the situation and apply the proper technique.

Along with a little common sense, the guidelines laid out in this book can help you keep off-roading fun. Just remember to think through each situation before you act and TREAD LIGHTLY!

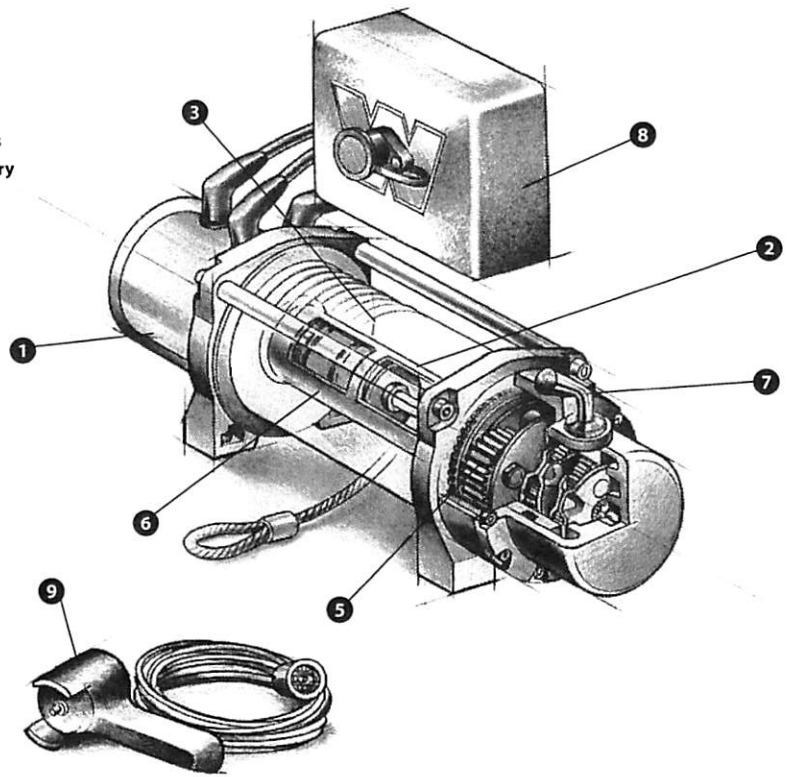

Structural components of a planetary gear winch

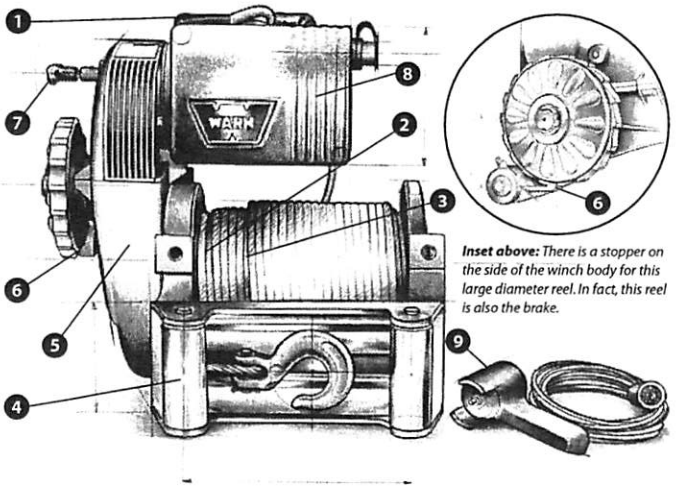

***Inset above:** There is a stopper on the side of the winch body for this large diameter reel. In fact, this reel is also the brake.*

The 8274-50 winch has a different structure. This winch uses spur gears for reduction. Moreover, it has an automatic disc type brake on the body side.

To start, you should familiarize yourself with your Warn winch and each of its components: Practice using your winch before using it on the trail.

1 Motor Typically the winch motor is powered by the vehicle's battery. The motor provides power to the gear mechanism, which turns the winch drum and winds the wire rope.

2 Winch Drum The winch drum is the cylinder onto which the wire rope feeds. The drum is driven by the motor and drive train. Its direction can be changed using the remote control.

3 Wire Rope The wire rope's diameter and length are determined by the winch's load capacity and design. Wrapped around the winch drum and fed through the fairlead, the wire rope is looped at the end to accept the hook's clevis pin.

4 Fairlead When using the winch at an angle, the fairlead (or wire lead) acts to guide the wire rope onto the spooling drum. It minimizes damage to the wire rope while it goes through the winch mount or bumper.

5 Gear Train The reduction gear converts the winch motor power into a large pulling force. The gear train design makes it possible for the winch to be lighter and more compact.

6 Braking System The brake is automatically applied to the winch drum when the winch motor is stopped and there is load on the wire rope. The brake prevents the winch from paying out line, which in turn holds the vehicle in place.

7 Clutch The clutch allows the operator to manually disengage the spooling drum from the gear train, enabling the drum to rotate freely (known as "freespooling"). Engaging the clutch "locks" the winch drum back onto the gear train.

8 Control Box Using electrical power from the vehicle's battery, the control box solenoids switch power to the motor, enabling the operator to change the direction of the winch drum rotation.

9 Remote Control The remote control plugs into the winch control box, allowing the operator to control the winch direction, as well as stand well clear of the wire rope while operating the winch.

⚠CAUTION
Never engage or disengage the clutch if winch is under load, wire rope is in tension, or wire rope drum is moving.

HOW THE WINCH WORKS

Winch Mechanics

Now that you've familiarized yourself with your Warn winch and its components, we can begin reviewing how it works. The major advantage of an electric-powered winch is that it can provide reliable service for intermittent utility and recreational use even while the vehicle's engine is stalled — assuming, of course, that sufficient battery current is available. Your winch can operate at high current loads, and, for this reason, the control box uses a high current control system to safely handle the current flow.

It is important to understand that the longer the pull, the more heat that is created, just like a hot plate. Prolonged winching without cooling the winch motor will damage the motor. Also, if the engine is idling during winching, the battery may drain faster than it is charging. So pay close attention to your voltage gauge to make sure you aren't draining your battery too low to start your vehicle.

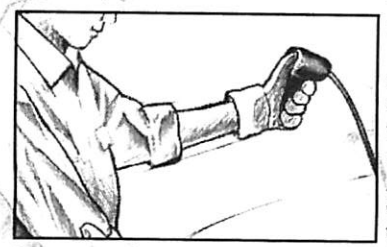

The winch is controlled by the hand held remote control to allow the operator to stand clear during the winching process.

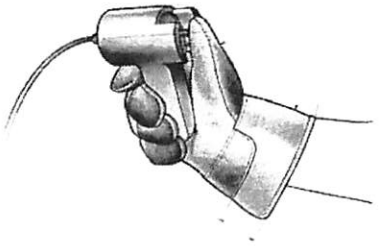

Control Of Your Winch

The winch is controlled by the hand held remote control to allow the operator to stand clear while controlling the winching process. The remote control provides control of the forward or reverse rotation of the spooling drum.

How the Winch Reacts to Load

Warn winches are rated by pulling capacity. The maximum pulling capacity occurs on the first layer of wire rope on the drum. As the layers increase, the pulling power decreases. It's the mathematics of winching. Exceeding the winch capacity could cause the winch to fail or the wire rope to break. Thinking through how you intend to use your winch now, could save you a big headache later.

In addition, you'll also want to make sure that your winch's mounting system and your vehicle's frame can accommodate the rated load of your winch.

So analyze your situation. Use your judgement to calculate how much weight you intend to pull. Calculate the gross weight and multiply by 1.5 and then do not exceed the rating of your winch or wire rope.

WINCH ACCESSORIES YOU'LL WANT TO HAVE WITH YOU

Alone, the winch is not much more than a simple tool. But when used with certain accessories and enhancements, your Warn winch can become a versatile and productive tool. In this section, we'll review several of these items. Some are vital to the safe operation of your winch, while others offer added versatility and convenience.

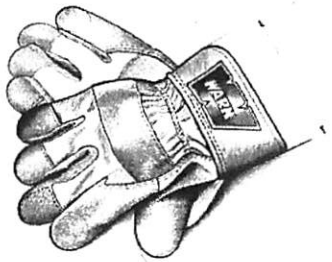

Gloves Wire rope, through use, will develop "barbs" which can slice skin. It is extremely important to wear protective gloves while operating the winch or handling the wire rope. Avoid loose fitting clothes or anything that could become entangled in the wire rope and other moving parts.

Hook Strap Use to hold the hook and keep fingers away from the fairlead as the wire rope is being spooled in. Winches develop tremendous pulling forces and can easily remove fingers and limbs that are placed in pinch points. Put the hook into the loop and hold the strap between the thumb and forefingers.

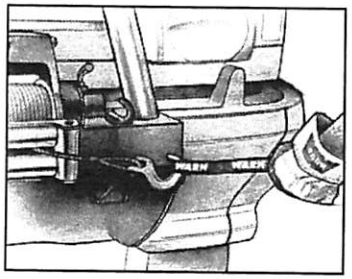

Snatch Block Used properly, the multi-purpose snatch block allows you to: (1) increase your winch's pulling power; and (2) change your pulling direction without damaging the wire rope. Proper use of the snatch block is covered in "Before You Pull".

Clevis/D-Shackles The D-Shackle is a safe means for connecting the looped ends of cables, straps and snatch blocks. The shackle's pin is threaded to allow easy removal.

Choker Chain Can be used to hook-up to another vehicle or sharp objects for an anchor point. Chains, however, will damage or kill trees.

Tow Hooks Secured properly to your vehicle's frame, tow hooks provide an attachment point for wire hooks, straps, and chains.

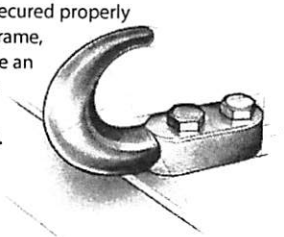

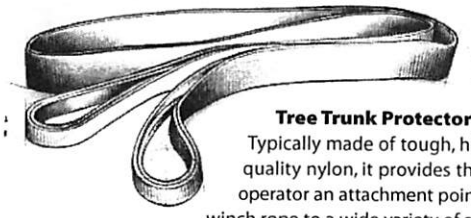

Tree Trunk Protector Typically made of tough, high-quality nylon, it provides the operator an attachment point for the winch rope to a wide variety of anchor points and objects, as well as protect living trees.

Heavy Blanket In certain situations you may decide to throw a heavy blanket or similar object over the wire rope. A heavy blanket, such as a quilted mover's blanket, can absorb energy should the wire rope break. Place it on the wire rope midway between the winch and the anchor point. Do this before the wire rope is put under tension. Do not approach or move the blanket once tension is applied. Do not allow it to get pulled into the fairlead. If necessary to move or remove the blanket, slack the tension on the wire rope first.

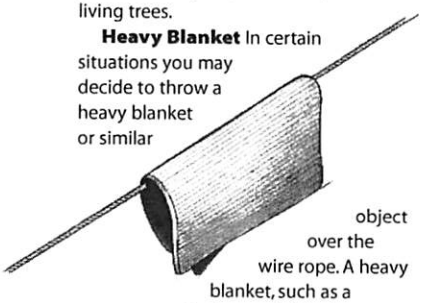

⚠CAUTION

Never attach a recovery strap to the winch hook to increase the length of a pull. Never attempt to tow a vehicle with the recovery strap attached directly to the winch hook. Never use "bungie" straps that develop tremendous and potentially dangerous amounts of force when stretched.

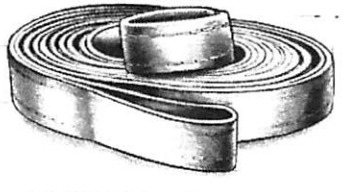

Recovery Strap Never use a recovery strap in a winching operation. Because it is designed to stretch, it stores energy and could react like a rubber band should your rigging fail. Use the recovery strap to "snatch" out a stuck vehicle.

Shovels & Hand Tools Quite often during winching activities, you'll find yourself in need of some additional help. You may want to stow equipment such as a shovel, an axe and a Hi-Lift jack for additional assistance when needed.

Backup Parts Important backup parts to carry for backcountry travel should include an extra screw-pin shackle, snatch block, and remote control unit. For severe and continued winch use, consider including an extra wire rope and winch hook.

Toolbox Items Items to bring along include hand wrenches, screwdrivers, pliers, and tools to change wire rope.

Booster Cables Many roadside emergencies stem from a dead battery. To prevent exhausting your electrical source, you can install a dual battery system and a battery isolator kit. Also, it's wise to include battery booster cables and the Warn quick-connect cable system.

Battery Recommendations A fully charged conventional automotive battery with a minimum rating of 650 cold cranking amps is recommended to obtain peak performance from your winch. Make sure all electrical connections are clean and tight.

BEFORE YOU PULL

Practice using your winch before you get stuck. A real situation is no time to be learning how to use your winch.

Make sure new wire rope is stretched before it is first used. Unspool the full length of the wire rope, leaving 5 wraps on the drum. Apply at least 500 pounds of tension. You can do this by setting up an anchor point and pulling your vehicle to it on a slightly inclined, flat surface and letting the vehicle roll.

Whether you're recovering another vehicle or pulling a stump from the ground, knowing the proper winching techniques can help keep you and others around you safe. And perhaps the most important part of the winching process, regardless of the situation, is what you do before you pull.

In this section, we'll show you the basic fundamentals for effective winching. However, it is up to you to analyze the situation and make the decisions necessary for the proper use of your winch. Apply your knowledge of your winch and the basic fundamentals you've practiced and adjust your techniques to your unique situation. Some keys to remember when using your Warn winch:

1. **Always take your time to assess your situation and plan your pull carefully.**
2. **Always take your time when using a winch.**
3. **Use the right equipment for your situation.**
4. **Always wear leather gloves and do not allow the wire rope to slide through your hands.**
5. **You and only you should handle the wire rope and operate the remote control switch.**
6. **Think safety at all times.**
7. **Practice. Practice and practice the steps.**

Single line pull

Rigging for the Pull

The following steps describe how to recover your vehicle with rigging a single line pull. Double or multiple line rigging techniques follow the same basic steps, but use a snatch block to assist the process.

Step 1: PUT ON GLOVES.

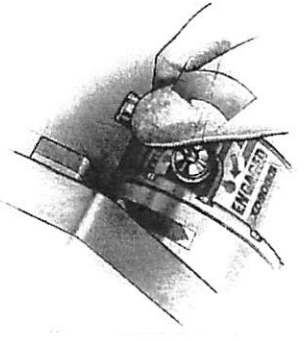

⚠WARNING

Always use supplied hook strap to hold hook when spooling wire rope in or out.

Step 2: DISENGAGE CLUTCH. To allow free spooling of the winch drum, rotate the clutch lever on the winch to Disengage. Freespooling conserves battery power.

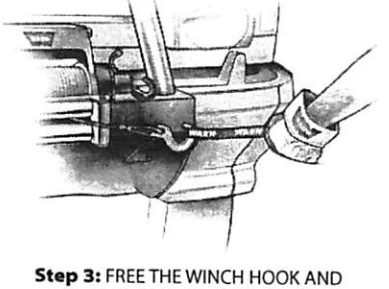

⚠WARNING

Always keep hands and clothing clear of the wire rope, hook and fairlead opening during operation and when spooling.

Step 3: FREE THE WINCH HOOK AND ATTACH HOOK STRAP. Free the winch hook from its anchor point. Attach hook strap to the hook (if not attached).

⚠CAUTION

Never attempt to disengage the clutch while wire rope is under tension. Never engage the clutch while the drum is rotating. Always make sure the clutch is fully engaged or disengaged.

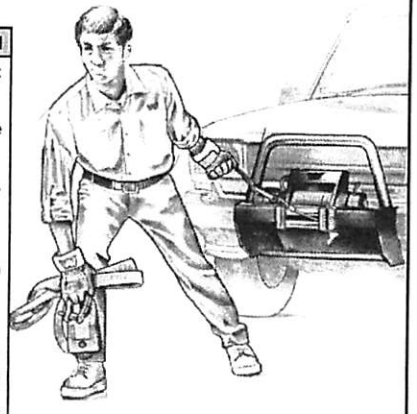

Step 4: PULL WIRE TO ANCHOR POINT. Pull out enough wire rope to reach your anchor point. Be sure to keep a certain amount of tension in the wire. It can become twisted and overwrap when slackened, leading to wire rope damage. To prevent loosing the end, hold the winch hook in the hook strap while you work.

⚠CAUTION

Never leave remote control plugged into winch while free spooling, rigging or sitting idle.

How to choose an anchor point:

A secure anchor is critical to winching operations. An anchor must be strong enough to hold while winching. Natural anchors include trees, stumps, and rocks. Hook the cable as low as possible. If no natural anchors are available, when recovering another vehicle, your vehicle becomes the anchor point. In this case, be sure to put the transmission in neutral, apply the hand brake and block its wheels to prevent your vehicle from moving.

Ideally, you'll want an anchor point that will enable you to pull straight in the direction the vehicle will move. This allows the wire rope to wind tightly and evenly onto the spooling drum. An anchor point as far away as possible will provide the winch with its greatest pulling power.

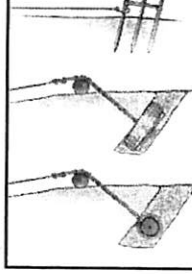

Stakes or axles, driven in at an angle and tied together.

Spare tire and rim buried deep and the chain secured through the rim.

Buried log with chain secured around the log.

⚠CAUTION

Never hook the wire rope back onto itself. This damages the wire rope.

Step 5: SECURE TO THE ANCHOR POINT. Once you've established your anchor point, secure the tree trunk protector or choker chain around the object.

Step 6: ATTACH THE CLEVIS/D-SHACKLE AND HOOK STRAP. Attach the shackle to the two ends of the strap or chain and through the hook loop, being careful not to over tighten (tighten and back-off 1/2 turn).

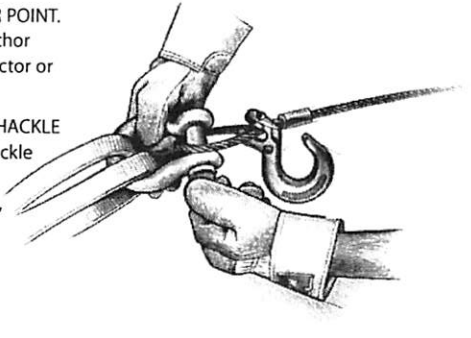

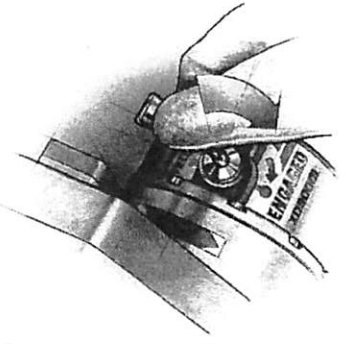

Step 7: LOCK THE CLUTCH. Lock the winch drum by rotating the clutch lever on the winch to Engage.

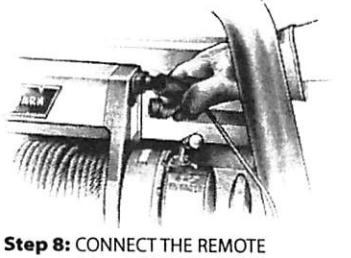

Step 8: CONNECT THE REMOTE CONTROL. Be careful not to let the remote control cord dangle in front of the winch. If you choose to control the winch from inside your vehicle, always pass the remote through a window to avoid pinching the cord in the door. **Always disconnect the remote control when not in use.**

Step 9: PUT WIRE ROPE UNDER TENSION. Using the winch switch, slowly wind the wire rope until no slack remains. Once the wire rope is under tension, stand well clear, and never step over it.

Step 10: CHECK YOUR ANCHOR. Make sure all connections are secured and free of debris before continuing with the winching procedure.

⚠CAUTION

Never use the winch as a hoist. Never use the winch's wire rope to tow another vehicle.

PULLING

As you probably have already noticed, there are many things to do and consider before you actually begin pulling. Think through what you're doing and you can keep yourself and those around you out of harm's way.

Operating your winch properly is so important, in fact, you should practice these techniques before having to face the distractions and stresses of a real winching situation.

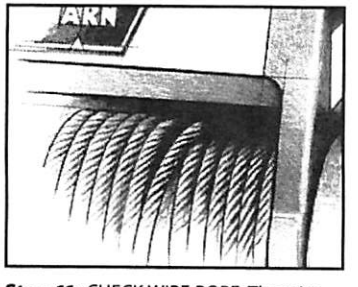

⚠CAUTION

Never winch when there are less than 5 wraps of wire rope around the winch drum.

Step 11: CHECK WIRE ROPE. The wire rope should be neatly wound around the spooling drum. Improper winding can cause damage to the wire rope.

Step 12: LAY SOMETHING OVER THE WIRE ROPE, if you decide it is necessary, midway between the winch and the anchor point to absorb energy should the wire rope snap loose. Tree limbs, heavy jackets, chain, back pack and the like may be used for this purpose.

NOTICE

Always avoid continuous side pulls which can pile up wire rope at one end of the drum. This pile up of wire can damage wire rope or winch.

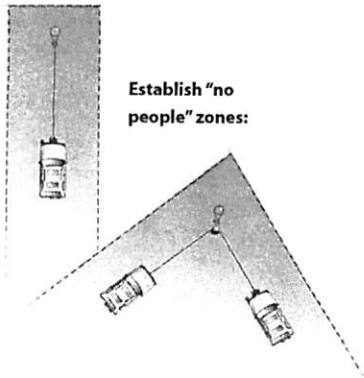

Establish "no people" zones:

Step 13: MAKE YOUR INTENTIONS CLEAR. Be sure that everyone in the immediate vicinity surrounding the winching operation is completely aware of your intentions before you pull.

Declare where the spectators should not stand — never behind or in front of the vehicle and never near the wire rope or snatch block. Your situation may have other "no people" zones.

NOTICE

Avoid overheating the winch motor. For extended winching, stop at reasonable intervals to allow the winch motor to cool down.

Step 14: BEGIN WINCHING. With the winching vehicle's engine on and light tension already on the wire rope, begin winching slowly and steadily. Be sure that the wire rope is winding evenly and tightly around the spooling drum. For additional assistance, the winched vehicle can be slowly driven while being pulled by the winch.

Step 15: FOR VEHICLE RECOVERY, continue pulling until the vehicle is on stable ground. If you are able to drive the vehicle, the winching operation is complete.

Step 16: SECURE VEHICLE. Once recovery of the vehicle is complete, be sure to secure the vehicle's brakes and put the Transmission in "park" (automatic) or "low" gear for (manual) transmissions. Release tension in the wire rope.

What to look for under load

The wire rope must always spool onto the drum as indicated by the drum rotation decal on the winch.

As you power in, make sure the wire rope winds evenly and tightly on the drum. This prevents the outer wire wraps from drawing into the inner wraps, binding and damaging the wire rope.

Avoid shock loads by using the control switch intermittently to take up wire rope slack. Shock loads can momentarily far exceed the winch and wire rope ratings.

During side pulls the wire rope tends to stack up at one end of the drum. This stack can become large enough to cause serious damage to the winch. So, line up pulls as straight ahead as possible and stop winching if the wire rope comes close to the tie rods or mounting plate. To fix an uneven stack, spool out that section of the rope and reposition it to the opposite end of the drum which will free up space for continued winching.

Winching hand signals

In some situations, recovery could involve two people. One drives and controls the winch, while the other provides navigation instructions and ensures the wire rope is winding properly. You and your helper must established clear and precise hand signals and review so everyone clearly understands. It should also be understood that if the driver controlling the winch cannot see both hands of the assistant, the winch should not be activated. Suggested signals:

1) Direction of steering
Hold your arms out with thumbs up and tilt your hands in the direction you advise the driver to steer.

2) Power in the wire rope
Hold your forefinger in the air above your shoulder height and draw small circles in the air to indicate to wind the winch.

3) Power out the wire rope
Hold your forefinger pointing down and draw circles in the air at about waist height to indicate feeding more wire from the winch.

4) Pulse wind the wire rope
Tells the driver to wind the winch in short, quick bursts. Open and close the two fingertips until you want the winch to stop.

5) Stop the winch
Clinch fist, palm to driver, held high enough for driver to see and other arm straight out at shoulder height is the sign to stop the winch.

6) Braking
Cross your palms together to tell the driver to apply the foot brake.

7) Drive assist
Tells driver to give the tires more drive force to assist the winching process.

How to spool under no load

Arrange the remote control lead so it can not be caught in the winch. Arrange the wire rope so it will not kink or tangle when spooled. Be sure any wire rope already on the spooling drum is wound tightly and evenly layered. Tighten and straighten the layer if necessary. Keep the wire rope under light tension and spool the wire rope back onto the winch drum in even layers. Stop frequently to tighten and straighten the layers as necessary. Repeat this process until the winch hook is the same distance as the full length of the remote control from the winch. Pinch the hook between your thumb and forefinger and attach the hook strap. Hold the hook strap between the thumb and forefinger to keep tension on the wire rope. Walk the wire rope towards the fairlead, carefully spooling in the remaining wire rope by pulsing the remote control switch. Store the hook at the fairlead or tensioned to a suitable location to the side.

If you do not have the hook strap, use a length of cord or something similar. To prevent serious injury, NEVER put your fingers inside the hook area as you are powering in.

⚠WARNING

Always keep hands and clothing clear of the wire rope, hook and fairlead opening during operation and when spooling.

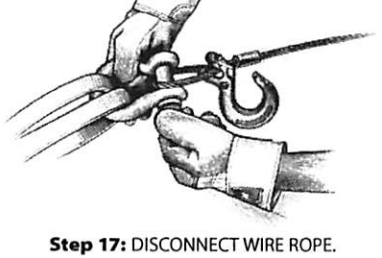

Step 17: DISCONNECT WIRE ROPE. Disconnect from the anchor.

Step 18: REWIND WIRE ROPE. The person handling the wire rope should walk the rope in and not let it slide through the hand and control the winch at all times.

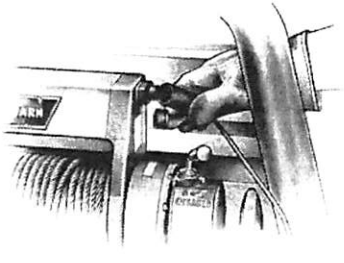

Step 19: DISCONNECT REMOTE CONTROL. Disconnect the remote control cord from the control box and store in a clean and dry place. Winching operations are now complete. Put the cap on the solenoid plug in.

RIGGING TECHNIQUES

Various winching situations will require application of other winching techniques. These could range from too little distance to achieve maximum pull using straight line rigging, simply increasing pulling power, or maintaining a straight-line pulling situation. You will have to assess what technique is correct for your situation. Think "safety" at all times.

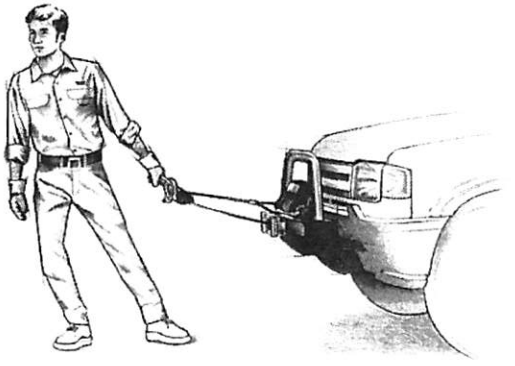

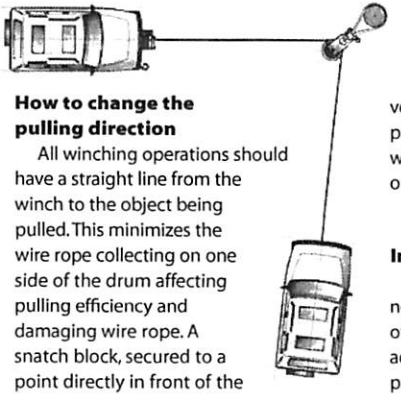

How to change the pulling direction

All winching operations should have a straight line from the winch to the object being pulled. This minimizes the wire rope collecting on one side of the drum affecting pulling efficiency and damaging wire rope. A snatch block, secured to a point directly in front of the vehicle, will enable you to change your pulling direction while still allowing the wire rope to be at 90° to wind properly onto the spooling drum.

Increasing pulling power

In some cases, you may find yourself needing more pulling power. The use of snatch blocks increases mechanical advantage and that increases your pulling power:

Single line

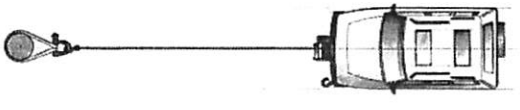

Double line

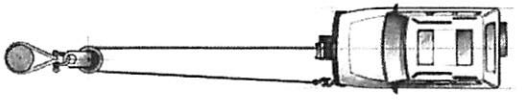

Triple line

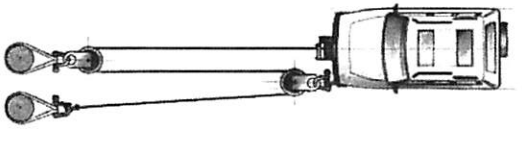

Double line

Because pulling power decreases with the number of layers of wire rope on the winch drum, you can use a snatch block to double line out more wire rope. This decreases the number of layers of wire rope on the drum, and increases pulling power.

Start by feeding out enough wire rope to free the winch hook. Attach the hook to your vehicle's frame/tow hook and run the wire rope through a snatch block.

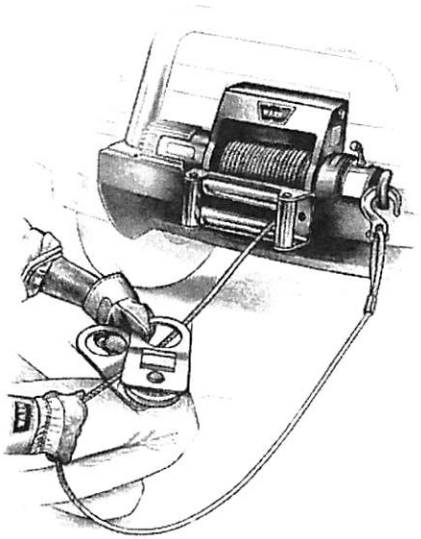

Disengage the clutch and, using the snatch block, pull out enough wire to reach your anchor point. Do not attach hook to mounting kit.

Secure to the anchor point with a tree trunk protector or choker chain. Attach the clevis/shackle. Attach the shackle to the two ends of the strap/chain, being careful not to over tighten (tighten and back-off 1/2 turn).

Triple Line

Use the same techniques as the Double Line. Select a robust mounting location on your vehicle for the snatch block and the screw-pin shackle. Keep a 90° angle between the winch and run the wire rope to the first anchor-point and through the snatch block. Secure rope back to the vehicle. Put the wire rope through the snatch block and secure with the screw-pin shackle on the vehicle as close to the winch as practical. Now run the wire rope to the final anchor point

Secure to the anchor point with a tree trunk protector or choker chain. Attach the clevis/shackle. Attach the shackle to the two ends of the strap/chain, being

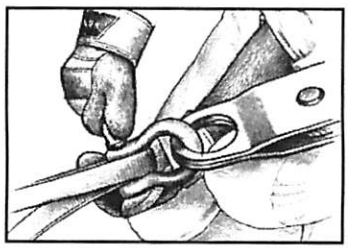

careful not to over tighten (tighten and back-off 1/2 turn).

Secure the winch hook. While keeping the line near the ground, insert the winch hook through the screw-pin shackle. Check your anchor. Make sure all connections are secured and free of debris before continuing with the winching procedure.

MAINTENANCE

- Inspect the wire rope before and after each winching operation. If the wire rope has become kinked or frayed, the wire rope needs to be replaced. Be sure to also inspect the winch hook and hook pin for signs of wear or damage. Replace if necessary.
- Keep winch, wire rope, and switch control free from contaminants. Use a clean rag or towel to remove any dirt and debris. If necessary, unwind winch completely (leaving a minimum of 5 wraps on spooling drum), wipe clean, and rewind properly before storage. Using a light oil on the wire rope and winch hook can keep rust and corrosion from forming.
- Operating your winch for a long period of time places an extra burden on your vehicle's battery. Be sure to check and maintain your battery and battery cables according to manufacturer guidelines. Also inspect switch control and all electrical connections to be certain they are clean and tight fitting.
- Inspect the remote control for damage, if so equipped. Be sure to cap the remote socket to prevent dirt and debris from entering the connections. Store remote control in a protected, clean, dry area.
- No lubrication is required for the life of the winch.

THE FINAL ANALYSIS

The basic guide to proper winching techniques cannot cover all the possible situations in which you may need to use a winch. In the final analysis, the decisions you make will determine the final outcome. So think through each situation and each step of use. Always be mindful of your own safety and the safety of others. Pay attention and you'll have fun.

CHAPTER 10

23' 25,900 LB. G.V.W.R. (TANDEM AXLE)

Specifications of Sure-Trac Trailer - for transport of:
SKYLIFT, INC.
PATRIOT 40/50

Total Length:	30' 2"
Total Width:	8' 6"
Front Deck:	90" long x 79" wide with 2" x 6" pressure treated wood deck
Empty Weight:	5,230 LBS
Cargo Deck:	144" long x 79" wide with 2" x 6" pressure treated wood deck
Tongue Length:	84"
Dovetail:	41.50" long with 6 degree slope
Axle:	(2) Two 12K slipper spring axles with electric brakes – 66" spring centers and 92" hub face
Tires:	(4) ST235 / 75R 17.5 LRH
Safety Chain:	3/8" grade 70 – 36" overall length
Lights:	Rubber mounted sealed LED
Wiring:	Sealed wire harness
Brake/Battery:	Breakaway switch / LED battery box
Pintle Eye:	21 ton 3" pintle ring with vertical adjustment of 18" to 32"
Trailer Jack:	12K drop leg jack
Ramps:	Spring assist ramps – 64"
Tool Box:	Tongue mounted 48"W x 19"D x 17"H

Copyright © 2014 Novae Corporation. All rights reserved.

Novae
NovaeCorp.com

23' 25,900 LB. G.V.W.R. (TRI-AXLE)

Specifications of Sure-Trac Trailer - for transport of:
SKYLIFT, INC.
PATRIOT 40/50

Total Length:	30' 2"
Total Width:	8' 6"
Front Deck:	90" long x 79" wide with 2" x 6" pressure treated wood deck
Empty Weight:	5,230 LBS
Cargo Deck:	144" long x 79" wide with 2" x 6" pressure treated wood deck
Tongue Length:	84"
Dovetail:	41.50" long with 6 degree slope
Axle:	(3) Three 8K slipper spring axles with electric brakes – 77" spring centers and 93" hub face
Tires:	(6) ST215 / 75R 17.5 LRH
Safety Chain:	3/8" grade 70 – 36" overall length
Lights:	Rubber mounted sealed LED
Wiring:	Sealed wire harness
Brake/Battery:	Breakaway switch / LED battery box
Pintle Eye:	21 ton 3" pintle ring with vertical adjustment of 18" to 32"
Trailer Jack:	12K drop leg jack
Ramps:	Spring assist ramps – 64"
Tool Box:	Tongue mounted 48"W x 19"D x 17"H

Copyright © 2014 Novae Corporation. All rights reserved.

Novae
NovaeCorp.com

SURE-TRAC

Sure-Trac™ Brand Trailers and Accessories One Year Limited Warranty

Novae Corp. warrants to the original owner that your Sure-Trac trailer will be free from defects in material and workmanship for the one (1) year period commencing with the date of purchase, except as herin limited. The obligation of this warranty is limited to repairing or replacing any part or parts which, in the opinion of Novae Corp. is/are defective in material or workmanship under normal use and service.

90 Day Limited Warranty

Excluded from this One Year Limited Warranty are electrical components and lights, jacks, sealants, seals, locks, and couplers, which are warranted for a 90 day period commencing with the date of purchase.

Warranty Validation

Your new trailer must be registered with Novae Corp within ten (10) days of the original purchase. This purchaser record is required by Federal Law. Warranty registration forms are available on the web at www.novaecorp.com or by calling customer service at 800-372-1755, one will be mailed to you.

How to Obtain Service

1. All warranty claims must be presented to Novae Corp. and proper arrangements must be made and approved by Novae Corp. prior to any work being done.
2. All warranty repairs must be performed at Novae Corp. unless prior approval is obtained from Novae Corp. In certain cases, Novae Corp may, at its sole discretion, elect to have warranty work performed by a qualified repair facility.
3. Novae Corp. will not be obligated in any way to pay for: repairs made without specific advance approval, labor charges in excess of those deemed reasonable by Novae Corp., or for any part costs in excess of the cost if Novae Corp. had supplied the parts. The cost of any replacement items will be limited to the amount of the original cost of that item as installed and sold by Novae Corp.
4. Any charges for: overtime labor, service calls, towing charges, expediting, freight or transportation costs are the sole responsibility of the consumer and will not be paid by Novae Corp.

Items Not Covered In This Warranty

1. Wheels and Tires. Contact the tire manufacturer for warranty information
2. Running Gear including axle and suspension assemblies. Present all claims directly to the axle manufacturer or their authorized dealers.
3. Paint finish and durability are not covered under this warranty.
4. Damage or defects resulting from misuse (including, but not limited to, overloading as determined by the gross vehicle weight rating as shown on the vehicle identification label, improper loading, negligence, alteration, accident or lack of maintenance.)
5. Maintenance items that are worn through normal use.
6. Damage caused by loose nuts, bolts or screws including improperly torqued wheel lug nuts.
7. Damage caused by the use of incorrect hitch ball, pintle, or improper hitching.
8. Loss of time, inconvenience, loss of trailer use, rental or substitute equipment, loss of revenues, or any other losses.
9. Damage or loss resulting from towing a trailer that exceeds the tow vehicle manufacturer's specific towing limitations.
10. Any travel time or expenses, such as food, fuel, lodging, etc., incurred to obtain service.

Any express warranty not provided herein, and any remedy for breach of contract which, but for this provision, might arise by implication or operation of law, is hereby excluded and disclaimed. The implied warranties for merchantability and of fitness for a particular purpose are expressly limited to a term of one (1) year. Under no circumstances will Novae Corp. be liable to purchaser or any other person for any special, incidental, or consequential damages, whether arising out of a breach of warranty, breach of contract or otherwise. This warranty gives you specific legal rights and you may have other rights which vary from state to state.

Novae Corp. neither assumes nor authorizes any other person to give any other warranty on its behalf. This warranty is not transferable from the original owner.

TIRE SAFETY

Everything Rides On It

The National Traffic Safety Administration (NHTSA) has published a brochure (DOT HS 809 361) that discusses all aspects of Tire safety, as required by CFR 575.6. This brochure is reproduced in part below. It can be obtained and downloaded from NHTSA, free of charge, from the following web site:

http://www.nhtsa.gov/cars/rules/tiresafety/ridesonit/tires_index.html

Studies of tire safety show that maintaining proper tire pressure, observing tire and vehicle load limits (not carrying more weight in your vehicle than your tires or vehicle can safely handle), avoiding road hazards, and inspecting tires for cuts, slashes, and other irregularities are the most important things you can do to avoid tire failure, such as tread separation or blowout and flat tires. These actions, along with other care and maintenance activities, can also:

- Improve vehicle handling
- Help protect you and others from avoidable breakdowns and accidents
- Improve fuel economy
- Increase the life of your tires

The following information presents a comprehensive overview of tire safety, including information on the following topics:

- Basic tire maintenance
- Uniform Tire Quality Grading System
- Fundamental characteristics of tires
- Tire safety tips

Use this information to make tire safety a regular part of your vehicle maintenance routine. Recognize that the time you spend is minimal compared with the inconvenience and safety consequences of a flat tire or other tire failure.

Safety First–Basic Tire Maintenance

Properly maintained tires improve the steering, stopping, traction, and load-carrying capability of your vehicle. Underinflated tires and overloaded vehicles are a major cause of tire failure. Therefore, as mentioned above, to avoid flat tires and other types of tire failure, you should maintain proper tire pressure, observe tire and vehicle load limits, avoid road hazards, and regularly inspect your tires.

Finding Your Vehicle's Recommended Tire Pressure and Load Limits

Tire information placards and vehicle certification labels contain information on tires and load limits. These labels indicate the vehicle manufacturer's information including:

- Recommended tire size
- Recommended tire inflation pressure
- Vehicle capacity weight (VCW–the maximum occupant and cargo weight a vehicle is designed to carry)
- Front and rear gross axle weight ratings (GAWR– the maximum weight the axle systems are designed to carry).

Both placards and certification labels are permanently attached to the trailer near the left front.

Understanding Tire Pressure and Load Limits

Tire inflation pressure is the level of air in the tire that provides it with load-carrying capacity and affects the overall performance of the vehicle. The tire inflation pressure is a number that indicates the amount of air pressure– measured in pounds per square inch (psi)–a tire requires to be properly inflated. (You will also find this number on the vehicle information placard expressed in kilopascals (kPa), which is the metric measure used internationally.)

Manufacturers of passenger vehicles and light trucks determine this number based on the vehicle's design load limit, that is, the greatest amount of weight a vehicle can safely carry and the vehicle's tire size. The proper tire pressure for your vehicle is referred to as the "recommended cold inflation pressure." (As you will read below, it is difficult to obtain the recommended tire pressure if your tires are not cold.)

Because tires are designed to be used on more than one type of vehicle, tire manufacturers list the "maximum permissible inflation pressure" on the tire sidewall. This number is the greatest amount of air pressure that should ever be put in the tire under normal driving conditions.

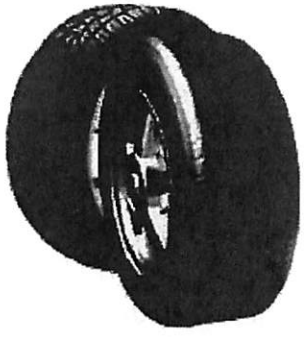

Checking Tire Pressure

It is important to check your vehicle's tire pressure at least once a month for the following reasons:

- Most tires may naturally lose air over time.
- Tires can lose air suddenly if you drive over a pothole or other object or if you strike the curb when parking.
- With radial tires, it is usually not possible to determine under inflation by visual inspection.

For convenience, purchase a tire pressure gauge to keep in your vehicle. Gauges can be purchased at tire dealerships, auto supply stores, and other retail outlets.

The recommended tire inflation pressure that vehicle manufacturers provide reflects the proper psi when a tire is cold. The term cold does not relate to the outside temperature. Rather, a cold tire is one that has not been driven on for at least three hours. When you drive, your tires get warmer, causing the air pressure within them to increase. Therefore, to get an accurate tire pressure reading, you must measure tire pressure when the tires are cold or compensate for the extra pressure in warm tires.

Steps for Maintaining Proper Tire Pressure

- Step 1: Locate the recommended tire pressure on the vehicle's tire information placard or certification label.
- Step 2: Record the tire pressure of all tires.
- Step 3: If the tire pressure is too high in any of the tires, slowly release air by gently pressing on the tire valve stem with the edge of your tire gauge until you get to the correct pressure.
- Step 4: If the tire pressure is too low, note the difference between the measured tire pressure and the correct tire pressure. These "missing" pounds of pressure are what you will need to add.
- Step 5: At a service station, add the missing pounds of air pressure to each tire that is underinflated.
- Step 6: Check all the tires to make sure they have the same air pressure (except in cases in which the front and rear tires are supposed to have different amounts of pressure).

If you have been driving your vehicle and think that a tire is underinflated, fill it to the recommended cold inflation pressure indicated on your vehicle's tire information placard or certification label. While your tire may still be slightly underinflated due to the extra pounds of pressure in the warm tire, it is safer to drive with air pressure that is slightly lower than the vehicle manufacturer's recommended cold inflation pressure than to drive with a significantly underinflated tire. Since this is a temporary fix, don't forget to recheck and adjust the tire's pressure when you can obtain a cold reading.

Tire Size

To maintain tire safety, purchase new tires that are the same size as the vehicle's original tires or another size recommended by the manufacturer. Look at the tire information placard or the sidewall of the tire you are replacing to find this information. If you have any doubt about the correct size to choose, consult with the tire dealer.

Tire Tread

The tire tread provides the gripping action and traction that prevent your vehicle from slipping or sliding, especially when the road is wet or icy. In general, tires are not safe and should be replaced when the tread is worn down to 1/16 of an inch. Tires have built-in tread wear indicators that let you know when it is time to replace your tires. These indicators are raised sections spaced intermittently in the bottom of the tread grooves. When they appear "even" with the outside of the tread, it is time to replace your tires. Another method for checking tread depth is to place a penny in the tread with Lincoln's head upside down and facing you. If you can see the top of Lincoln's head, you are ready for new tires.

Tire Balance and Wheel Alignment

To avoid vibration or shaking of the vehicle when a tire rotates, the tire must be properly balanced. This balance is achieved by positioning weights on the wheel to counterbalance heavy spots on the wheel-and-tire assembly. A wheel alignment adjusts the angles of the wheels so that they are positioned correctly relative to the vehicle's frame. This adjustment maximizes the life of your tires and prevents your car from veering to the right or left when driving on a straight, level road. These adjustments require special equipment and should be performed by a qualified technician.

Tire Rotation

Rotating tires from front to back and from side to side can reduce irregular wear (for vehicles that have tires that are all the same size).

A Tire Rotation Example

For maximum mileage, rotate your tires every 5,000 miles.

Follow correct rotation patterns.

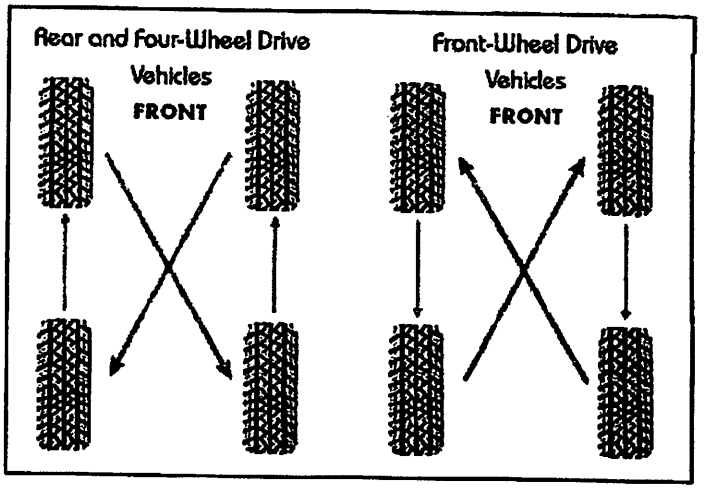

Tire Repair

The proper repair of a punctured tire requires a plug for the hole and a patch for the area inside the tire that surrounds the puncture hole. Punctures through the tread can be repaired if they are not too large, but punctures to the sidewall should not be repaired. Tires must be removed from the rim to be properly inspected before being plugged and patched.

Uniform Tire Quality Grading System (UTQGS)

To help consumers compare a passenger car tire's tread wear rate, traction performance, and temperature resistance, the federal government requires tire manufacturers to grade tires in these three areas. This grading system, known as the Uniform Tire Quality Grading System, provides guidelines for making relative comparisons when purchasing new tires. You also can use this information to inquire about the quality of tires placed on new vehicles.

Although this rating system is very helpful when buying new tires, it is not a safety rating or guarantee of how well a tire will perform or how long it will last. Other factors such as personal driving style, type of car, quality of the roads, and tire maintenance habits have a significant influence on your tire's performance and longevity.

Tread wear grades are an indication of a tire's relative wear rate. The higher the tread wear number is, the longer it should take for the tread to wear down. For example, a tire grade of 400 should wear twice as long as a tire grade of 200.

Traction grades are an indication of a tire's ability to stop on wet pavement. A higher graded tire should allow you to stop your car on wet roads in a shorter distance than a tire with a lower grade. Traction is graded from highest to lowest as "AA", "A", "B", and "C".

Temperature grades are an indication of a tire's resistance to heat. Sustained high temperature (for example, driving long distances in hot weather), can cause a tire to deteriorate, leading to blowouts and tread separation. From highest to lowest, a tire's resistance to heat is graded as "A", "B", or "C".

Tire Fundamentals

Federal law requires tire manufacturers to place standardized information on the sidewall of all tires. This information identifies and describes the fundamental characteristics of the tire and also provides a tire identification number for safety standard certification and in case of a recall.

Information on Passenger Vehicle Tires

Please refer to the diagram below.

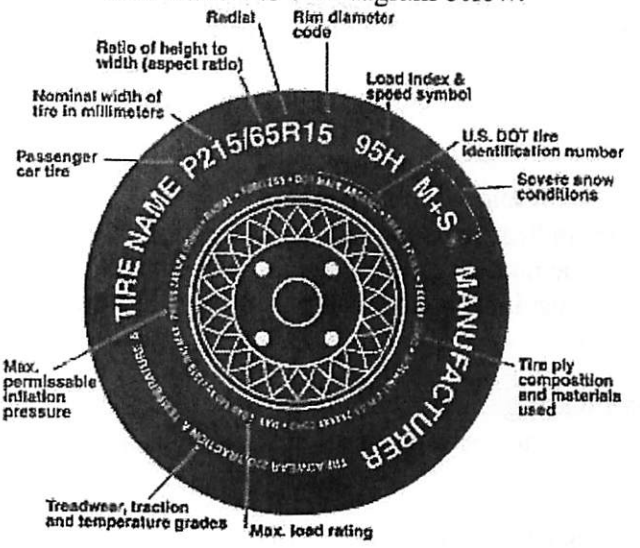

P

The "P" indicates the tire is for passenger vehicles.

Next number

This three-digit number gives the width in millimeters of the tire from sidewall edge to sidewall edge. In general, the larger the number, the wider the tire.

Next number

This two-digit number, known as the aspect ratio, gives the tire's ratio of height to width. Numbers of 70 or lower indicate a short sidewall for improved steering response and better overall handling on dry pavement.

R

The "R" stands for radial. Radial ply construction of tires has been the industry standard for the past 20 years.

Next number

This two-digit number is the wheel or rim diameter in inches. If you change your wheel size, you will have to purchase new tires to match the new wheel diameter.

Next number

This two- or three-digit number is the tire's load index. It is a measurement of how much weight each tire can support. Note: You may not find this information on all tires because it is not required by law.

M+S

The "M+S" or "M/S" indicates that the tire has some mud and snow capability. Most radial tires have these markings; hence, they have some mud and snow capability.

Speed Rating

The speed rating denotes the speed at which a tire is designed to be driven for extended periods of time. Please remember, no trailer is to be hauled at speeds exceeding 60MPH.

U.S. DOT Tire Identification Number

This begins with the letters "DOT" and indicates that the tire meets all federal standards. The next two numbers or letters are the plant code where it was manufactured, and the last four numbers represent the week and year the tire was built. For example, the numbers 3197 means the 31st week of 1997. The other numbers are marketing codes used at the manufacturer's discretion. This information is used to contact consumers if a tire defect requires a recall.

Tire Ply Composition and Materials Used

The number of plies indicates the number of layers of rubber-coated fabric in the tire. In general, the greater the number of plies, the more weight a tire can support. Tire manufacturers also must indicate the materials in the tire, which include steel, nylon, polyester, and others.

Maximum Load Rating

This number indicates the maximum load in kilograms and pounds that can be carried by the tire.

Maximum Permissible Inflation Pressure

This number is the greatest amount of air pressure that should ever be put in the tire under normal driving conditions.

UTQGS Information

Tread wear Number

This number indicates the tire's wear rate. The higher the tread wear number is, the longer it should take for the tread to wear down. For example, a tire graded 400 should last twice as long as a tire graded 200.

Traction Letter

This letter indicates a tire's ability to stop on wet pavement. A higher graded tire should allow you to stop your car on wet roads in a shorter distance than a tire with a lower grade. Traction is graded from highest to lowest as "AA","A", "B", and "C".

Temperature Letter

This letter indicates a tire's resistance to heat. The temperature grade is for a tire that is inflated properly and not overloaded. Excessive speed, under inflation or excessive loading, either separately or in combination, can cause heat build-up and possible tire failure. From highest to lowest, a tire's resistance to heat is graded as "A", "B", or "C".

Tire Safety Tips

Preventing Tire Damage

- Slow down if you have to go over a pothole or other object in the road.
- Do not run over curbs, and try not to strike the curb when parking.

Tire Safety Checklist

- Check tire pressure regularly (at least once a month), including the spare.
- Inspect tires for uneven wear patterns on the tread, cracks, foreign objects, or other signs of wear or trauma. Remove bits of glass and other foreign objects wedged in the tread.
- Make sure your tire valves have valve caps.
- Check tire pressure before going on a long trip.
- Do not overload your vehicle. Check the tire information placard for the maximum recommended load for the vehicle.
- If you are towing a trailer, remember that some of the weight of the loaded trailer is transferred to the towing vehicle.

Reporting Safety Defects

If you believe that your vehicle has a defect that could cause a crash or could cause injury or death, you should immediately inform the National Highway Traffic Safety Administration (NHTSA) in addition to notifying Novae Corporation at 1-800-372-1755.

If NHTSA receives similar complaints, it may open an investigation, and if it finds that a safety defect exists in a group of vehicles, it may order a recall and remedy campaign. However, NHTSA cannot become involved in individual problems between you, your dealer, or Novae Corporation.

To contact NHTSA, you may either call the Vehicle Safety Hotline toll-free at 1-888-327-4236 (TTY: 1-800-424-9153), go to http://www.safecar.gov.or write to:

Administrator
NHTSA
1200 New Jersey Avenue S.E.
Washington, DC 20590

You can also obtain information about motor vehicles safety from http://www.safecar.gov.

Sure-Trac$_{TM}$ Trailer Warranty Registration Form

Trailer Model: _____ Date: _____

Vehicle Identification Number (VIN): _____

Owners Name: _____ Phone Number: _____

Street: _____

City, State Zip: _____

Primary Use: _____

Store and Location where purchased: _____ Delivery Date: _____

Store Representative: _____ Signature: _____

(Fold to conceal information, tape closed, affix postage and mail)

SURE-TRAC™

Name: _____

Address: _____

City, State Zip: _____

PLACE POSTAGE HERE

Novae Corp.
One Novae Parkway
Markle, IN 46770

Trailer Axle (8k-12k)

OWNER'S MANUAL

LIPPERT COMPONENTS®

TABLE OF CONTENTS

Introduction 3
Safety Information 3
Break-In Period For Electric Drum Brakes 4
Hubs/Drums/Bearings 4
Hub Removal 4
Brake Drum Inspection 5
Bearing Inspection 5
Bearing Lubrication - Grease 6
Seal Inspection and Replacement 7
Bearing Adjustment/Hub Replacement 7
Lubrication 8
Bearing Lubrication - Oil 8
Oil Cap and Oil Seal 8
Periodic Bearing Inspection 9
Spindle Nut Adjustment 9
Disc Brake Option 9
Disc Brake Pads 9
Disc Brake Caliper 9
Electric Brakes 10
How To Use Lippert Electric Brakes Properly 11
General Maintenance - Electric Brakes 11
Brake Adjustment 11
Lubricate Brakes 12
Clean and Inspect Brakes 12
Magnets 13
Shoes and Linings 13
Axle and Suspension Installation 13
Suspension Systems 13
Double-Eye Leaf Springs 14
Slipper Leaf Springs 14
Inspection 15
Suspension Replacement 16
Adjustable Spring Seats 16
Wheels 16
Wheel Selection 16
Torque Requirements 17
Tires 18
Introduction To Troubleshooting 19
Troubleshooting 19
Measuring Voltage 19
Troubleshooting Chart 20
Measuring Amperage 21
Amperage Chart 22
Maintenance Schedule 23
Wiring Diagram 24
Pigtail and Coupler Wiring Color Codes 25

Storage **26**
Storage Preparation **26**
Extended Storage Inspection Procedures **26**
Trip Preparation Checklist **27**
)00-Lb Axle Wheel End Components ..... **28 - 32**
10,000-Lb Axle Wheel End Components ..... **33 - 35**
12,000-Lb Axle Wheel End Components ..... **36 - 38**
Notes **39**

Introduction

Combining years of experience in the trailer frame and recreational vehicle industry with the newest and most innovative technology, Lippert Components, Inc. introduces its newest addition, The Axle and Running Gear Division.

The following publication is designed to give the customer an easy-to-understand operation and service manual to provide useful and important information. The quality of the Lippert name and the finest materials utilized in the production of the Axles and Running Gear provide you with hubs, brakes, drums and spindles that make trailering and braking the finest in the industry.

Quality comes threefold in Lippert Components, Inc.

1. The finest quality materials.
2. The latest technology and design.
3. The quality standards maintained from materials to final assembly.

All three points provide the customer with the best product they can possibly buy and the satisfaction of knowing they can trust the equipment on which they have spent their hard-earned money.

Lippert Components, Inc. thanks you for purchasing our Axles and Running Gear. When you speak of Lippert Components, Inc., our quality stands beside you.

Safety Information

⚠WARNING

The "WARNING" symbol above is a sign that a service or maintenance procedure has a safety risk involved and may cause death or serious injury if not performed safely and within the parameters set forth in this manual.

Always wear eye protection when performing service or maintenance to the vehicle. Other safety equipment to consider would be hearing protection, gloves and possibly a full face shield, depending on the nature of the service.

This manual provides general service and maintenance procedures. Many variables can change the circumstances of the service procedure, i.e., the degree of difficulty involved in the service operation and the ability level of the individual performing the operation. This manual cannot begin to plot out procedures for every possibility, but will provide the general instructions for effectively servicing the vehicle. In the event the skill level required is too high or the procedure too difficult, a certified technician should be consulted before performing the necessary service. Failure to correctly service the vehicle may result in voiding the warranty, inflicting injury or even death.

The owner's manual for your unit may have more procedures for service and maintenance.

Break-In Period For Electric Drum Brakes

The break-in period is a typical phenomenon with drum brakes and especially electric drum brakes. Electric drum brakes will require a break-in period to achieve full performance. This break-in period applies for new axles and any time new brake shoes and/or magnets are installed as part of regular maintenance.
Lippert Components has found through extensive brake testing that the break-in period for our drum brakes can range from 20 to 50 brake applications.
Brakes can be seated in by applying approximately 8-10 volts to the trailer brakes at an initial speed of 40 mph and allowing the truck/trailer combination to slow down to 20 or 25 mph. For best results do not use truck brakes during this procedure. The trailer brakes will seat in faster by using them to stop both the truck and trailer. The easiest method is to apply the trailer brakes using the manual activation lever located on the in-cab brake controller. Care **MUST** be taken to not overheat the lining material, therefore brake applications conducted at one-mile intervals will suffice. The driver should feel a noticeable difference in the brake performance during this period, sometimes in as few as 10 applications. After 50 applications, the brake lining material will be fully cured from the heat and develop close to 100% contact with the brake drum surface.
This break-in period not only seats the shoe lining material but also seats in the brake electromagnets. During the break-in period, the linings will wear at a faster rate than they do after they are seated in.

NOTE: Brakes should be manually adjusted after the first 200 miles of operation and periodically thereafter, approx. 3,000 mile intervals.

Hubs/Drums/Bearings

Hub Removal

To remove the hub assembly for inspection, maintenance or service, follow the six (6) steps below:

⚠WARNING **Lift unit by the frame and never the axle or suspension. Do not go under unit unless it is properly supported by jack stands. Unsupported units can fall causing death or serious injury.**

1. Lift trailer and support it per manufacturer's requirements.
2. Remove the wheel.
3. Remove the grease cap by prying the edge out of the hub. If equipped with oil lubrication, unscrew oil cap using a 2 ¼" socket (8K) or 2½" socket (10-12K). Let oil drain into pan.
4. Pull the cotter pin from the castle nut and remove the outer spindle nut.
5. Remove the spindle washer.
6. Pull the hub off the spindle. Do not let the outer bearing cone fall free of the assembly. The inner bearing cone will be contained by the seal and will not fall out.

NOTE: Brakes may need to be adjusted or backed off to remove drum from spindle.

NOTE: A gear puller may be necessary to remove hub from spindle.

Brake Drum Inspection

The brake shoes contact the drum surface and the magnet contacts the armature. These surfaces are subject to wear and should be inspected periodically.

The drum surface should be re-machined if wear is more than .030" or out of round by more than .015". The drum should be replaced if scoring or wear is greater than .090".

The inner surface of the brake drum that contacts the brake magnet is the armature surface. If the armature surface is scored or worn unevenly, it should not be machined more than .030". The magnets should be replaced whenever the armature surface is refaced and vice versa.

NOTE: Ensure that the wheel bearing cavities are clean and free of contamination before reinstalling bearing and seals. Resurfacing procedures can produce metal chips and dust that can contaminate the wheel bearings and cause failure.

Drum	Maximum Re-bore Diameter
12.25"	12.340"

Bearing Inspection

Wash all grease and oil from the bearing cone using a suitable solvent. Dry the bearing with a clean, lint-free cloth and inspect each roller completely. If any pitting, spalling, or corrosion is present, then the bearing **MUST** be replaced. The bearing cup inside the hub **MUST** be inspected.

NOTE: Bearings **MUST** always be replaced in sets of one cone and one cup.

⚠ CAUTION **Always wear eye protection when servicing the axle, brakes, hubs, springs and wheels. Failure to wear eye protection may result in serious injury.**

Follow the procedure below to replace the bearing cup:

1. Place hub on a flat surface with bearing cup on the bottom.
2. With brass drift punch, lightly tap around the small end of the cup to push it out.
3. Clean the hub bore. Replace the cup by tapping it back in with the brass drift punch. Cup should be seated against the retaining shoulder in the hub.

NOTE: Consult Bearing Replacement Chart for proper replacement bearings.

NOTE: Replacing the bearing cup is a very precise process. The cup **MUST** be perfectly seated when replaced. If the cup is not seated correctly, damage to the assembly may not be covered by the warranty. Consult Lippert Components, Inc. prior to replacing bearing and bearing cup. The trailer should be taken to a certified service center for this work to be done.

⚠ CAUTION **Do not mix Lithium, calcium, sodium or barium complex greases. Chemical compatibility problems may occur. If you are changing from one chemical grease to another, be sure all old grease is removed prior to applying new grease. If the old grease is not removed completely, chemical compatibility may result in component failure or damage.**

Bearing Lubrication - Grease

Bearing grease should be replaced every 12,000 miles or 12 months, whichever comes first. Remove all old grease from wheel hub and bearings first. Bearings should be packed by machine if possible. Packing bearings by machine is preferable; however, packing by hand is a viable alternative.

Follow these procedures to repack bearings by hand:

1. Place grease into the palm of your hand (Fig. 1).
2. Press widest end of bearing into the outer edge of the grease pile, forcing grease into the inner area of the bearing between two adjacent rollers (Fig. 2).
3. Repeat this process while turning bearing from roller to roller until all rollers are coated.
4. Apply a light coat of grease into the bearing cup surface.
5. Reassemble bearing into cup.

Fig. 1

Fig. 2

Recommended Wheel Bearing Grease Specifications	
Thickener Type	Lithium Complex
Dropping Point	230°C (446°F) Minimum
Consistency	NLGI No. 2
Additives	EP, Corrosion, & Oxidation Inhibitors
Base Oil	Solvent Refined Petroleum Oil
Base Oil Viscosity	@40°C (104°F) 150cSt (695 SUS) Minimum
Viscosity Index	80 Minimum
Pour Point	-10°C (14°F) Minimum

Approved Sources	
Mobil Oil	Mobilgrease HP
Exxon/Standard	Ronex MP
Kendal Refining Co.	Kendall L-427
Ashland Oil Co.	Valvoline Val-plex EP Grease
Pennzoil Prod. Co.	Premium Wheel Bearing Grease 707L

Seal Inspection and Replacement

Always check the seal to make sure that it is not damaged, nicked, cracked or torn and is in good working order. If there is any question of condition, replace the seal.

Procedure to replace seal:

1. Pull seal from the hub with a seal puller. Never push the seal out with the bearing. The bearing may get damaged.
2. Apply a PERMATEX sealant to the outside of the new seal.

NOTE: Do not use PERMATEX on rubber encased seals.

3. Tap the new seal into place using a clean, hardwood block (Fig. 3).

NOTE: When installing a new oil seal, be sure side marked "AIR SIDE" is away from bearing cone.

Fig. 3

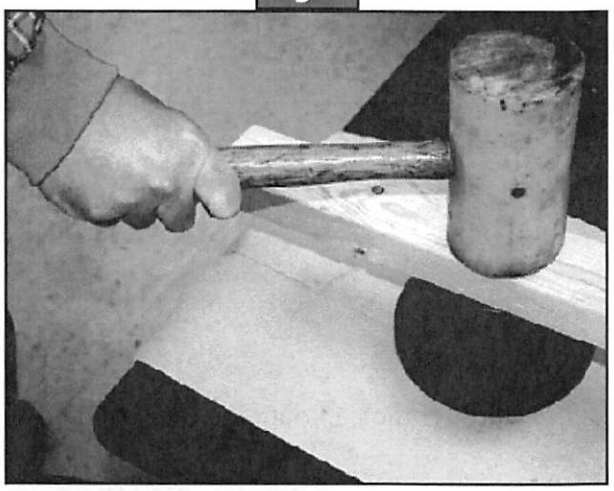

Fig. 4

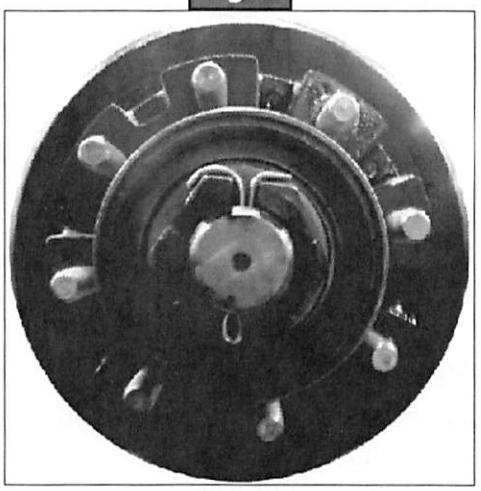

Bearing Adjustment/Hub Replacement

To adjust bearings or replace removed hub, follow procedures below:

1. Place hub, bearing, washers and castle nut back on axle spindle in the reverse order from which they were removed. Castle nut should be torqued to 50 ft.-lb. Hub will rotate during this process.
2. Loosen castle nut to back off the torque.
3. Tighten castle nut finger tight until snug.
4. Insert cotter pin. If cotter pin does not line up with hole, back castle nut up slightly until pin can be inserted (Fig. 4).
5. Bend cotter pin over to lock nut in place. Nut should be free to move with only the cotter pin keeping it in place.
6. Tighten screw in cap to 25 ft-lbs.

Lubrication

Bearing Lubrication - Oil

Your axle bearings are lubricated with a SAE 80-90W hypoid gear oil. Periodically check and refill the hub as necessary to the level indicated on the clear plastic oil cap. The oil can be filled through the cap by removing the rubber plug. In order to check oil level, do so after unit has been parked for a few minutes.

Recommended Oil Lube for axle bearings:
Oil designation: SAE 90, SAE 80W-90, SAE 75W-90

Approved Sources	
Union Oil Co.	Unocal MP Gear Lube
Exxon Co.	Gear Oil GX 80W-90
Mobil Oil	Mobillube SHC 75W-90
Pennzoil Co.	Gear Plus 80W-90 GL-5
	Gear Plus Super 75W-90

Oil Cap and Oil Seal

The clear plastic oil cap should be tightened to 25 ft-lbs. Over-tightening can damage the sealing o-ring and cause an oil leak.

In order to remove hub/rotor assembly a gear puller may be required. The oil seal is a 2 part seal where the inside diameter of the seal presses onto the spindle journal and the outside diameter of the seal presses into the hub bore. Therefore a gear puller is the most efficient way to remove hub from spindle. A new oil seal **MUST** be installed before reassembly or the old seal will leak upon re-installation and use. When reinstalling a new oil seal, be sure to correctly orient the seal. Most are marked "AIR SIDE." This side **MUST** not be placed towards the oil and bearing or it will fail in service. Install new seal using a block of wood and hammer to drive the seal in the seal bore square until the outer face of the seal is flush with the seal bore face. Do not use permatex on rubber encased oil seals.

Periodic Bearing Inspection

A physical bearing inspection should be conducted every 15,000 miles. An inspection of the bearing condition can detect early bearing issues. Upon inspection, bearings should look brand new and can be reassembled and used if in this condition. If discoloration, pitting, corrosion, flat spots or some abnormal condition is observed, the bearing and race should be replaced at the same time. Bearings are available at auto part stores, see components pages (27-36) for part numbers.

Spindle Nut Adjustment

The proper method to assemble the spindle nut is as follows:

1. After hub installation onto spindle, install outer bearing.
2. Install spindle washer and thread on spindle nut with slots facing outward.
3. Tighten spindle nut with a pair of slip joint pliers to approx 50 ft-lbs.
4. Back off torque usually ¼ turn so that you can finger tighten the spindle nut.
5. Finger tighten, drop cotter pin through slot and hole in spindle. If slot in nut does not align with hole in spindle, back nut off until it does, never tighten past finger tight.
6. Bend legs over end of spindle and be sure legs do not interfere with oil cap upon reassembly.

Disc Brake Option

Disc Brake Pads

Disc brake pads are available through auto part stores. Brake pads are a consumable item so be sure to visually check pads every 3,000 miles. Be sure to also check rotor surfaces visually when you are checking the brake pads. Deep groves developing on one or both rotor surfaces can indicate a caliper piston, slider bolt or residual pressure problem if this ever occurs. Brake rotors should be turned when disc brake pads are replaced.

Disc Brake Caliper

The proper mounting torque for the disc brake caliper mounting bolts is 40-50 ft-lbs. If these are removed for servicing the brake system, add blue thread locking compound to the threaded area of the bolt at time of reassembly. Also lubricate the inside of caliper bushings that the slider bolts go through. Be sure to only use silicone based grease. The rubber bushings are not compatible with petroleum-based greases.

Electric Brakes

The basic structure of the Electric Brakes on your trailer will resemble the brakes on your car or tow vehicle, with one major difference; your trailer implements an Electric Actuation system and your tow vehicle utilizes a hydraulic system. The Electric Braking System operates in the following order of steps: (Refer to the Electric Braking System Diagram and the brake diagram below to follow along.)

1. Electric current is supplied to the trailer's braking system when the tow vehicle's brakes are applied.
2. From the tow vehicle's battery, the electricity flows to the brake's electromagnet.
3. When energized the magnets are attracted to the rotating surface of the drums.
4. This moves the actuating levers in the direction the drums are turning.
5. The actuating cam at the end of the shoe forces the primary shoe out to the drum surface.
6. The force of the primary shoe actuates the secondary shoe to contact the drum.
7. The force applied to the brake drum can be increased by elevating the current flow to the magnet.

Fig. 5

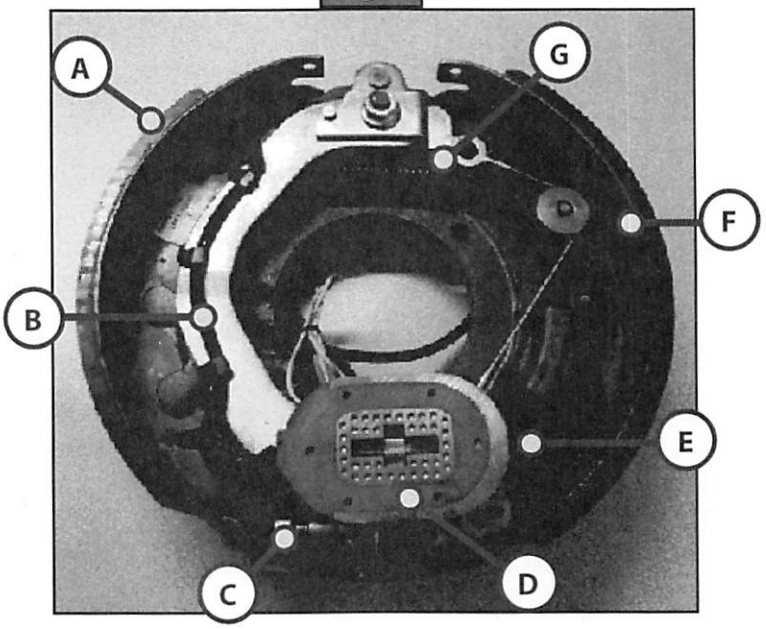

Callout	Description
A	Primary Shoe
B	Actuating Lever
C	Adjuster
D	Magnet
E	Adjusting Spring
F	Secondary Shoe
G	Retracting Spring

How To Use Lippert Electric Brakes Properly

The Lippert Components, Inc. Electric Braking System is synchronized with the tow vehicle brakes. Never attempt to stop the combined load of the tow vehicle and the trailer by using either the tow vehicle brakes or the trailer brakes only. They are designed to work together.

Small manual adjustments may occasionally be necessary to accommodate changing loads and driving conditions. Synchronization of tow vehicle to trailer braking can only be accomplished by road testing. Locking up, excessive grab, or delayed application is quite often due to the lack of synchronization between the tow vehicle and the trailer being towed. High voltage (2V+), Low voltage (2V-) or improperly adjusted brakes are the most common causes of these problems and can be easily remedied.

Prior to any adjustments, your trailer brakes should be burnished-in by applying the brakes 20-30 times with a 20 m.p.h. decrease in speed, e.g. 40 m.p.h. to 20 m.p.h. Allow ample time for brakes to cool between application. This allows the brake shoes and magnets to begin seating to the brake drum.

Trailer Wire Gauge Chart		
Wire Gauge and Type	Number of Axles	Length of Run
16 Ga Stranded Copper	1	N/A
14 Ga Stranded Copper	2	Under 30ft. (9.1m) from hitch to center of axles
12 Ga Stranded Copper	2 or 3	Over 30ft. (9.1m) from hitch to center of axles

General Maintenance - Electric Brakes

Brake Adjustment

⚠CAUTION **Prior to testing or adjusting brakes, be sure area is clear of any persons and vehicles. Failure to perform test in a clear area may result in death or serious injury.**

Lippert Components, Inc. Electric Brakes are automatic adjust only. If manual adjusting is needed, the following 6-step procedure can be utilized. The brakes should be adjusted in the following manner:

1. Jack up trailer and secure on adequate capacity jack stands. Follow trailer manufacturer's recommendations for lifting and supporting the unit. Make sure the wheel and drum rotates freely.

⚠CAUTION **Lift unit by frame and never the axle or suspension. Do not go under unit unless it is properly supported by jack stands. Unsupported units can fall causing death or serious injury.**

2. Remove the adjusting hole cover from the adjusting slot on the bottom of the brake backing plate.
3. With a screwdriver or standard adjusting tool, rotate the starwheel of the adjuster assembly to expand the brake shoes. Adjust the brake shoes out until the pressure of the linings against the drum makes the wheel very difficult to turn.
4. Then rotate the starwheel in the opposite direction until the wheel turns freely with a slight lining drag.

NOTE: A second screwdriver will be needed to push the auto adjusting lever away from the adjuster starwheel so that the starwheel can be rotated backwards.

5. Replace the adjusting hole cover and lower the wheel to the ground.
6. Repeat the above procedure on all brakes. For best results, the brakes should all be set at the same clearance.

Lubricate Brakes

Prior to reassembling the brake drum assembly, remember to apply a light film of white grease or an anti-seize compound on the brake anchor pin, the actuating arm bushing and pin, and the areas on the backing plate that are in contact with the brake shoes and magnet lever arm. In addition, apply a light film of grease on the actuating block mounted on the actuating arm.

Clean and Inspect Brakes

In the event the braking system encounters symptoms of improper application or failure, immediate inspection and service **MUST** be implemented. During normal use, servicing the braking system once a year is considered normal. Increased usage will require service on a regulated schedule based on 3000-6000 mile increments. As magnets and shoes become worn, they need to be changed to maintain maximum braking capability.

Be sure, when disassembling brakes for cleaning, to clean the backing plate, magnet arm, magnet and shoes. Also, make sure that any and all parts removed for cleaning are placed back into the same brake drum assembly. This is also an excellent time to check for parts that have become loose or worn.

⚠WARNING **Potential Asbestos Dust Hazard.**

Older brake linings have the potential to contain asbestos dust, which has been linked to serious or fatal illnesses. Certain precautions MUST be taken when servicing brakes:

1. Avoid creating and/or breathing any brake dust.
2. Do not machine, file, or grind the brake linings.
3. Remove with a damp brush or cloth. Dry brushing or compressed air will cause the dust particles to become airborne.

Magnets

This electric braking system utilizes an electromagnet to actuate the brake shoes. These high-quality magnets provide superior force and friction to safely and effectively stop the trailer. These magnets should be inspected and serviced on the same schedule as the rest of the axle system, at least once a year for normal use and more often if the trailer is used extensively. Abnormal or uneven wear is a sign that the magnet needs to be replaced. Check the surface of the magnet with a straight edge to check for uneven wear. The surface of the magnet should be completely flat.

If the magnet's coil is exposed in any way, even if normal wear is evident, the magnets should be replaced immediately. If the electromagnets are replaced, the drum armature surface should also be refaced. If a magnet is replaced on one side of an axle, it is recommended that the magnet on the opposite brake assembly also be replaced to ensure even braking capacity.

Figure 6 (Page 14) shows an Electro-Magnet with little or no wear. If there are any pronounced gaps on the surface of the Electro-Magnet, the magnet should be replaced.

Shoes and Linings

Linings should be replaced if the material is worn to 1/16" or less. Shoes should also be replaced if they become contaminated with grease or oil or have become scored, pitted or gouged. Heat cracks are normal and rarely require attention. When replacing shoes, both shoes on the same brake and the brakes on the same axle should all be replaced at the same time, once again ensuring even braking capacity.
After replacing shoes and linings, your trailer brakes should be burnished-in by applying the brakes 20-30 times with a 20 mph decrease in speed, e.g. 40 mph to 20 mph. Allow ample time for brakes to cool between application. This allows the brake shoes and magnets to begin seating to the brake drum.

Fig. 6

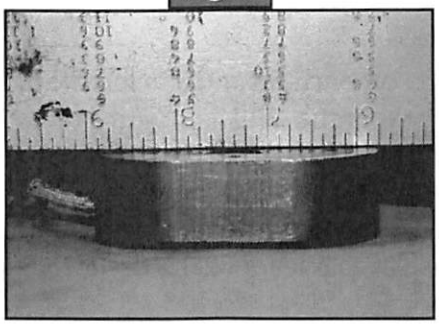

Axle and Suspension Installation

The single most important portion of axle installation is parallel alignment of the trailer axle(s) to the tow vehicle or drive axle(s). Parallel installation allows for correct and safe control, prolonged tread life and will all but eliminate dog-tracking. Proper alignment is most readily achieved by measuring from the center of the trailer king pin to the center of each end of the axles.
Lippert Components, Inc. tubular axles are made of high strength steel to prevent metal fatigue and provide the best possible welding conditions. The round tubular axles allow for even and uniform structure.

⚠CAUTION **Always wear eye protection when servicing the axle, brakes, hubs, springs and wheels. Failure to wear eye protection may result in serious injury.**

Suspension Systems

The suspension systems incorporated into Lippert Component, Inc. axles are designed to provide the following benefits:

1. Attach the axle to the trailer.
2. Dampen the effects of road shock.
3. Provide stability to the trailer.

All Lippert suspension systems are available in single and multiple axle configurations. For specific or custom applications, please contact Lippert Components, Inc. Axle Division.

Double-Eye Leaf Springs

Double-eye leaf springs have eyes at either end of the spring assembly with nylon bushings to assist in preventing wear. U-bolts hold the springs to the axle with a plate.

The articulation of this suspension occurs when the eyes rotate on the wear surfaces provided in eyes of the springs and on the equalizers. This suspension is also available in single and multiple axle configurations. In trailers with 2 or more axles, the additional movement is maintained by an equalizer. This feature allows for even load handling from axle to axle.

Double-eye suspension systems are available on 8,000 lb. axles. Tandem and triple axle mounting kits are available for both 33" and 35" axle spacing.

Slipper Leaf Springs

Slipper springs have a loop eye formed on one end and a reverse radius on the other. The front eye is secured to either the front hanger or rear of the equalizer with a bolt and nut. The slipper end rides against a wear block located in either the front of the equalizer or the rear hanger.

A keeper bolt or strap is placed under the slipper end to contain spring when the trailer is lifted off the ground. 8K tandem and triple axle attaching kits are available for both 33.5" and 36" axle spacing. 10K and 12K tandem and triple axle kits are also available for 42.25" or 48.25" axle spacing.

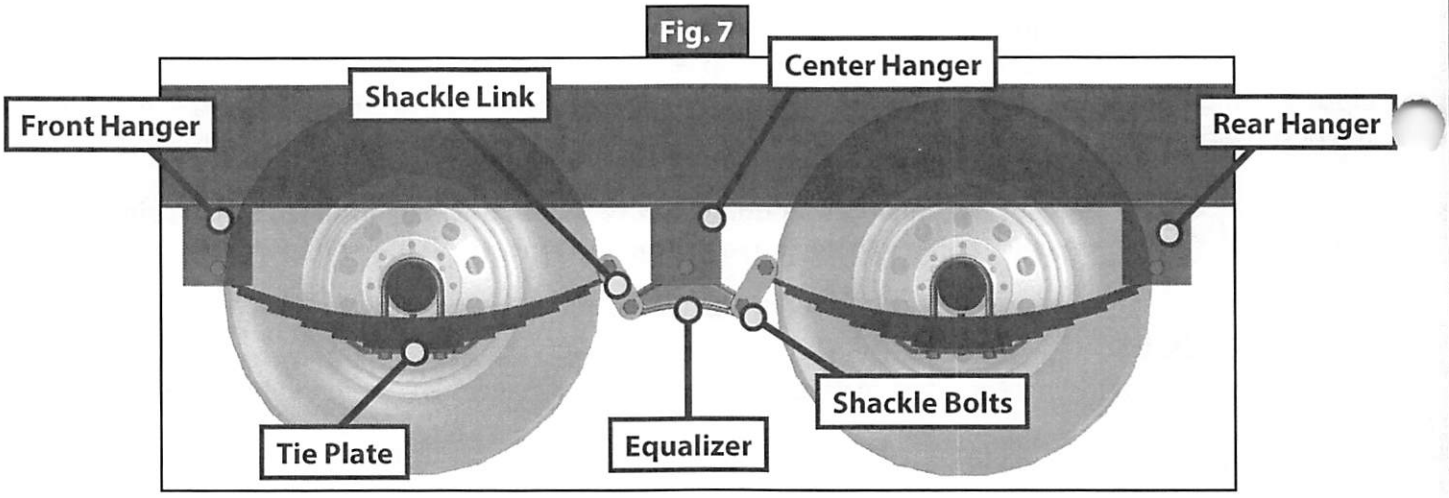

Inspection

All the components of your suspension system should be visually inspected for signs of wear, damage or loose fasteners at least every 6,000 miles. When replacing or tightening loose fasteners, consult the torque specs below for correct torque values.

Equalizer and Spring Eye Nut Torque Specifications	
Bolt Type	Torque
9/16" 8K U-Bolt Nuts	90 ft-lbs
5/8" 10K U-Bolt Nuts	95 ft-lbs
5/8" 12K U-Bolt Nuts	115 ft-lbs
9/16" Shoulder Bolts	35 ft-lbs
9/16" Non-Shoulder Bolts	Snug
10K and 12K Spring Eye Bolt	200 ft-lbs
10K and 12K Center Hanger/Equalizer Bolt	300 ft-lbs
Keeper Bolt	Snug

Worn spring eye bushings or sagging or broken springs should be replaced using the following method:

1. Support the trailer with the wheels just off the ground. Follow the trailer manufacturer's recommendations for lifting and supporting the unit.
2. After the unit is properly supported, place a suitable block under the axle tube near the end to be repaired. This block is to support the weight of the axle only so that suspension components can be serviced or replaced.
3. Disassemble the U-bolts, nuts, and tie plates.
4. Remove the spring eye bolts and the spring.
5. If the spring eye bushings are to be replaced, press out the old bushing by hand or tapping out with a punch.
6. Free-floating nylon bushing needs no lubrication. Press the new bushing into the spring eye by hand or gently tapping it in with a bounceless rubber or plastic mallet.
7. Reinstall repaired or replaced components in reverse order.

NOTE: For multiple axle units, the weight of each axle **MUST** be supported as outlined in Step 2 before disassembly of any component of the suspension system.

⚠WARNING **Lift unit by the frame and never the axle or suspension. Do not go under unit unless it is properly supported by jack stands. Unsupported units can fall causing death or serious injury.**

⚠CAUTION **Always wear eye protection when servicing the axle, brakes, hubs, springs and wheels. Failure to wear eye protection may result in serious injury.**

If the equalizer or equalizer bushings **MUST** be replaced, follow the instructions above for lifting and supporting the trailer unit and then proceed as follows:

1. With both axles blocked up, remove the spring eyebolt, keeper bolt, and equalizer bolt from the equalizer to be repaired or replaced.
2. Press the old nylon bushing out of the equalizer.
3. Reassemble in reverse order.

Suspension Replacement

1. Make sure springs are on straight. Align spring eyes to front hanger. Insert spring eye bolts but do not torque at this point.
2. Assemble springs into equalizer.
3. After leveling equalizer to frame, torque equalizer nuts and spring eye nuts.

Adjustable Spring Seats

The procedure for setting adjustable spring seats can be found on LIP Sheet 0226, which is available on the Lippert Components Customer Service website: http://lci1.com/images/support/lipsheet/0226.pdf

Wheels

Wheel Selection

When specifying or replacing your trailer wheels it is important that the wheels, tires, and axle are properly matched. The following characteristics are extremely important and should be thoroughly checked when replacement wheels are considered:

1. **Bolt Circle.** Wheels have many bolt circle variations and some are so close that it could be possible to attach an inappropriate wheel that does not match the axle hub.
2. **Capacity.** Wheel load capacity should match tire and trailer max. load ratings.
3. **Offset.** The relationship of the center line of the tire to the hub face of the axle should match any replacement. Failure to match offset may result in reducing the carrying capacity of your axle.
4. **Rim Contour.** Replacement wheels should be direct replacements to match the rim contour.

⚠WARNING **Use only rim contours suggested by manufacturer. Failure to use correct rim contour may cause dramatic separation of tire and wheel and could cause death or serious injury.**

⚠WARNING **Attempting to modify or repair a wheel can cause unsafe conditions that may result in an explosion. Air pressure on a weakened or cracked rim can cause death or serious injury.**

Torque Requirements

It is extremely important to apply and maintain proper wheel mounting torque on your trailer axle. Torque wrenches assure the proper amount of torque is being applied to a fastener. Use no other method to torque fasteners.

⚠WARNING **Proper and accurate torque MUST be maintained to prevent wheels from loosening, studs from cracking and/or breaking or other possible hazardous breakage resulting in death or serious injury.**

Be sure to use only the fasteners matched to the cone angle of your wheel (usually 60°or 90°). The proper procedure for attaching your wheels is as follows:

1. Start all bolts or nuts by hand to prevent cross threading.
2. Tighten bolts or nuts in the following sequence (see Wheel Torque Requirement Chart below).
3. Tightening fasteners should be done in stages. Follow the recommended sequence (Fig. 8), tighten fasteners per wheel torque requirements chart below.
4. Wheel nuts/bolts should be torqued before first road use and after each wheel removal. Check and re-torque after the 10 and 25 miles and again at 50 miles. A periodic check during regular service is recommended.

Wheel Torque Requirement Chart				
Wheel Size	Stud Size	Torque Sequence		
		1st Stage	2nd Stage	3rd Stage
14"	½"	20-25 ft-lbs	50-60 ft-lbs	90-120 ft-lbs
15"	½"	20-25 ft-lbs	50-60 ft-lbs	90-120 ft-lbs
16"	½"	20-25 ft-lbs	50-60 ft-lbs	90-120 ft-lbs
16.5" x 6.75"	½"	20-25 ft-lbs	50-60 ft-lbs	90-120 ft-lbs
16"	9/16"	20-25 ft-lbs	60-70 ft-lbs	120-130 ft-lbs
16.5" x 6.75"	9/16"	20-25 ft-lbs	60-70 ft-lbs	120-130 ft-lbs
16" Dual and 17.5" Cone Nut	⅝"	50-60 ft-lbs	100-120 ft-lbs	190-210 ft-lbs
16" Dual and 17.5" Flange Nut	⅝"	50-60 ft-lbs	150-200 ft-lbs	275-325 ft-lbs
14.5" Demount	⅝"	Tighten sequentially to 85-95 ft-lbs		

Fig. 8

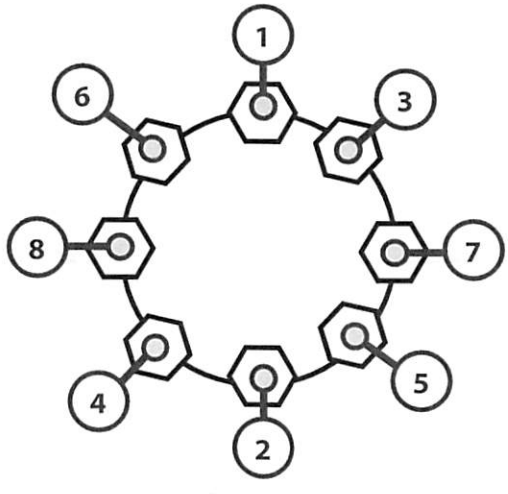

Tires

Prior to mounting tires onto wheels, be sure the rim size and contour are approved by the Tire and Rim Association Yearbook or the tire manufacturers catalog. In addition, confirm that the tire will carry the rated load. If the load is not evenly distributed on all tires, use the tire rated for the heaviest wheel position. The Rubber Manufacturers Association or the tire manufacturers guidelines should be consulted for mounting procedures.

Tire inflation pressure is the most important factor in tire life. Tire pressure should always be what is recommended by the manufacturer for the load. Always check pressure cold before operation. DO NOT bleed air from tires when they are hot. Check inflation pressure weekly during use to insure maximum tire and tread life.

The following tire wear diagnostic chart will help you pinpoint the causes and solutions of tire wear problems.

NOTE: Tire wear should be checked frequently because once a wear pattern becomes firmly established in a tire it is difficult to stop, even if the underlying cause is corrected.

Problem	Probable Cause	Corrective Action
Center Wear	Over-inflation	Adjust pressure to particular load per tire catalog.
Edge Wear	Under-inflation	Adjust pressure to particular load per tire catalog.
Side Wear	Loss of camber or overloading	Make sure load does exceed axle rating. Call Lippert Service & Warranty to advise.
Toe Wear	Incorrect Toe-in	Call Lippert Service & Warranty to advise.
Cupping	Out-of-balance	Check bearing adjustment and balance tires.
Flat Spots	Wheel lockup and tire skidding	Avoid sudden stop if possible and adjust brakes.

Introduction To Troubleshooting

The following section is a guideline for ensuring operation of your braking system. The safety of you, those traveling with you and those sharing the road is paramount and it starts with the ability to safely stop the tow vehicle and the towed vehicle.

Troubleshooting

Most brake malfunctions can be corrected by utilizing the Troubleshooting Chart on the next page. Mechanical failure is the most common form of malfunction, however, if the brake system fails and it's not mechanical, it is usually electrical. A Voltmeter and Ammeter are essential tools to diagnose these problems. Mechanical problems are mostly self-evident; something is bent or broken. Consult the troubleshooting chart on Page 21 to determine the probable cause and corrective actions for a variety of issues with the braking system.

Remember to use only Lippert Components, Inc. replacement parts on these systems. Consult the Limited Warranty or call our Service Department for any other related issues.

Measuring Voltage

The Braking System voltage is measured at the two lead wires of the magnet on any brake. Use the pin probes inserted through the insulation of the lead wires. To ensure that the battery is indicating a full charge, the towing vehicle engine should be running with the trailer coupler connected when checking the voltage.

Voltage in the system should begin at 0 volts and, as the brake pedal of the tow vehicle is applied, voltage will gradually increase to about 12 volts. If the system does not indicate at least 12 volts, problems may occur in the wiring of the system, the battery or alternator of the tow vehicle.

When the brakes are applied, a gradual increase in voltage is preferable to a quick increase to 12 volts. A gradual increase in voltage ensures smooth and firm trailer braking. A quick increase in voltage will cause the braking system to feel like the trailer is grabbing too quickly.

Taking a Voltage reading is usually done with probes inserted into the wire connector (Fig. 9).

Fig. 9

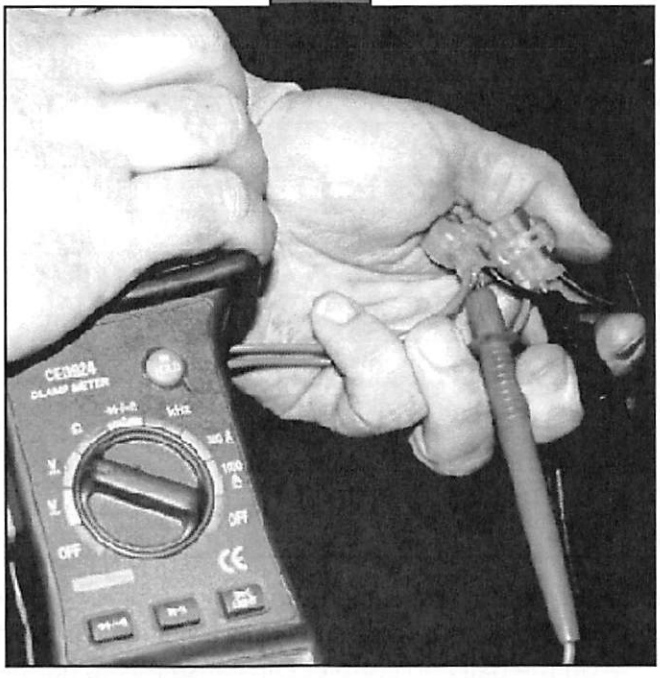

Troubleshooting Chart

Problem	Probable Cause	Corrective Action
No brakes	Open circuits	Find and correct
	Short circuits	Test and correct
	Severe under-adjustment	Adjust brakes
Weak brakes	Grease or oil on magnets or linings	Clean or replace
	Corroded connections	Clean and correct cause of corrosion
	Worn linings or magnets	Replace
	Scored or grooved brake drums	Machine or replace
	Improper synchronization	Correct
	Under-adjustment	Adjust brakes
	Glazed Linings	Re-burnish or replace
Locking brakes	Under-adjustment	Adjust
	Improper synchronization	Correct
	Loose, bent or broken brake components	Test and correct
	Out-of-round brake drums	Machine or replace
	Insufficient wheel load	Adjust system resistor and synchronize
Intermittent brakes	Broken wires	Test and correct
	Loose connections	Repair or replace
	Faulty ground	Find and repair
Brakes pull to one side	Wrong magnet lead wire color	Adjust
	Incorrect adjustment	Correct
	Grease or oil on linings or magnets	Clean or replace
	Broken wires	Find and repair
	Bad connections	Find and repair
Harsh brakes	Under-adjustment	Adjust
	Improper synchronization	Correct
Noisy brakes	Under-adjustment	Adjust
	Lack of lubrication	Lubricate
	Broken component	Replace component
	Incorrect brake components	Correct
Surging brakes	Grease or oil on linings or magnets	Clean or replace
	Out-of-round or cracked brake drums	Machine or replace
Dragging brakes	Over-adjustment	Readjust
	Out-of-round brake drums	Machine or replace
	Incorrect brake components	Replace
	Loose, bent or broken brake components	Replace
	Faulty breakaway switch	Repair or replace
	Loose wheel bearing adjustment	Adjust
	Bent spindle	Replace axle

NOTE: If all trailer lights and brakes do not work, check your wiring plug connection and make sure the ball is making solid contact with the coupler (that is how a trailer is grounded). Too much grease or not using dielectric grease on the ball and coupler can cause this to happen.

Measuring Amperage

The Braking System amperage is the amount of current flowing through the system when all magnets have been energized. The amperage will change proportionately with the voltage. To ensure that the battery is indicating a full charge, the towing vehicle engine should be running with the trailer coupler connected when checking the voltage.

If a resistor is used in the brake system, it **MUST** be set at zero or bypassed completely to obtain the maximum amperage reading. Individual amperage draw can be measured by inserting the ammeter in the line at the magnet you want to check. Disconnect one of the magnet lead wire connectors and attach the ammeter between the two wires. Consult Amperage Chart on the next page for normal amp readings. Make sure that the wires are properly reconnected and sealed after testing is completed.

Testing for Amperage can be done with probes (Fig. 10) or alligator clips on the leads or an amp clamp (Fig. 11).

Fig. 10

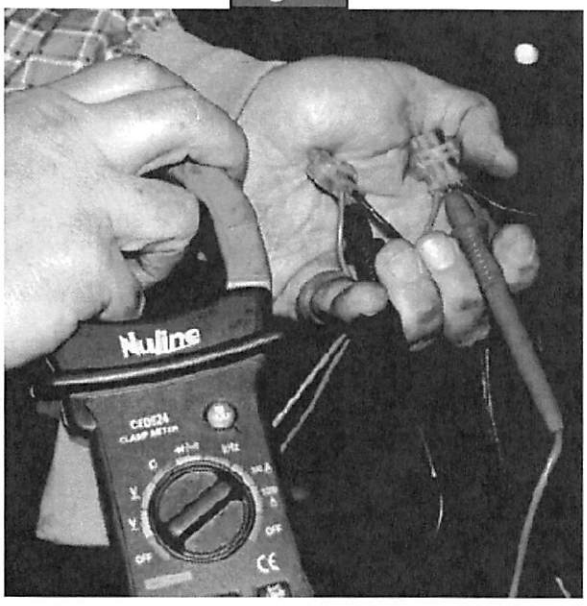

Fig. 11

Amperage Chart

Amps/Magnet	Two Brakes	Four Brakes	Six Brakes
3.0	6.0	12.0	18.0

Low or no voltage are the most common problem with the Braking System. Amperage at the brakes is also a relatively common issue.

Common causes of these conditions are:

1. Low quality electrical connections
2. Open circuits
3. Insufficient wire gauge
4. Broken wires
5. Blown fuses (fusing of brakes is not recommended)
6. Short circuits (indicated by high amperage)

Possible causes of shorts are:

1. Shorted magnet coils
2. Bare wires contacting a grounded object

Finding the cause of a short circuit in the system is done by isolating one section at a time. If the high amperage reading drops to zero by unplugging the trailer, then the short is in the trailer. If the amperage reading remains high with all the brake magnets disconnected, the short is in the trailer wiring.
All electrical troubleshooting procedures should start at the controller. Most complaints regarding brake harshness or malfunction are traceable to improperly adjusted or nonfunctional controllers. See your controller manufacturer's data for proper adjustment and testing procedures. For best results, all the connection points in the brake wiring should be sealed to prevent corrosion. Loose or corroded connectors will cause an increase in resistance which reduces the voltage available for the brake magnets.

Maintenance Schedule

Item	Function Required	Weekly	3 Months / 3,000 Miles	6 Months / 6,000 Miles	12 Months / 12,000 Miles
Brakes	Test that they're operational.	At Every Use			
Breakaway System	Check battery charge and switch operation.	At Every Use			
Brake Adjustment	Adjust to proper operating clearance.		◆		
Brake Magnets	Inspect for wear and current draw.			◆	
Brake Linings	Inspect for wear or contamination.				◆
Brake Controller	Check for correct amperage and modulation.			◆	
Trailer Brake Wiring	Inspect wiring for bare spots, fray, etc.				◆
Hub/Drum	Inspect for abnormal wear or scoring.				◆
Wheel Bearing	Inspect for corrosion or wear. Clean and repack.				◆
Seals	Inspect for leakage. Replace if removed.				◆
Springs	Inspect for wear, loss of arch.				◆
Suspension Parts	Inspect for bending, loose fasteners, wear.			◆	
Hangers	Inspect welds.				◆
Wheel Nuts and Bolts	Tighten to specified torque values.		◆		
Wheels	Inspect for cracks, dents, or distortion.			◆	
Tire Inflation Pressure	Inflated tires to mfg's. specifications.	◆			
Tire Condition	Inspect for cuts, wear, bulging, etc.		◆		

Fig. 12

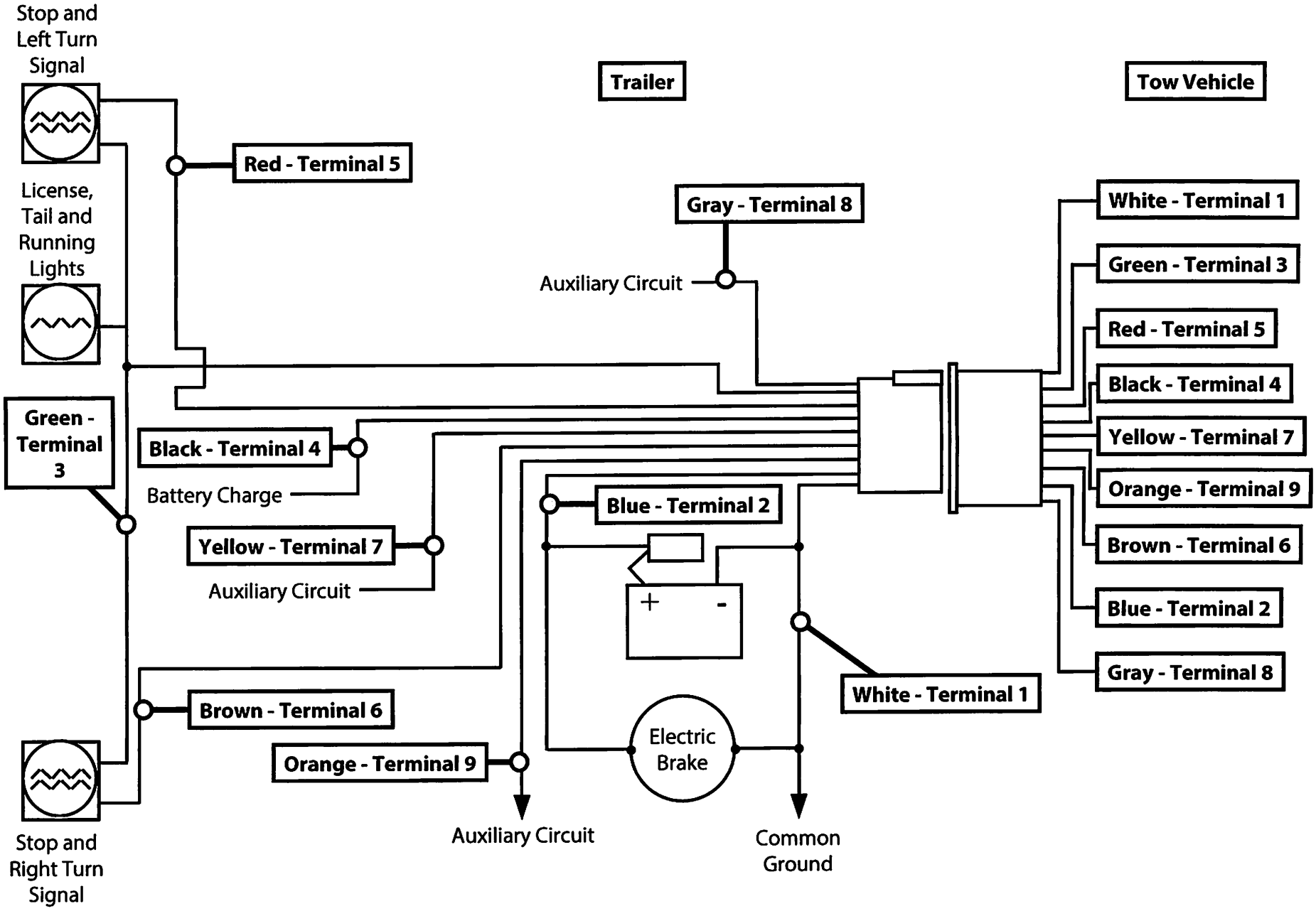
Trailer
Tow Vehicle
Stop and Left Turn Signal
License, Tail and Running Lights
Green - Terminal 3
Stop and Right Turn Signal
Red - Terminal 5
Black - Terminal 4
Battery Charge
Yellow - Terminal 7
Auxiliary Circuit
Brown - Terminal 6
Orange - Terminal 9
Auxiliary Circuit
Gray - Terminal 8
Auxiliary Circuit
Blue - Terminal 2
+
-
Electric Brake
White - Terminal 1
Common Ground
White - Terminal 1
Green - Terminal 3
Red - Terminal 5
Black - Terminal 4
Yellow - Terminal 7
Orange - Terminal 9
Brown - Terminal 6
Blue - Terminal 2
Gray - Terminal 8

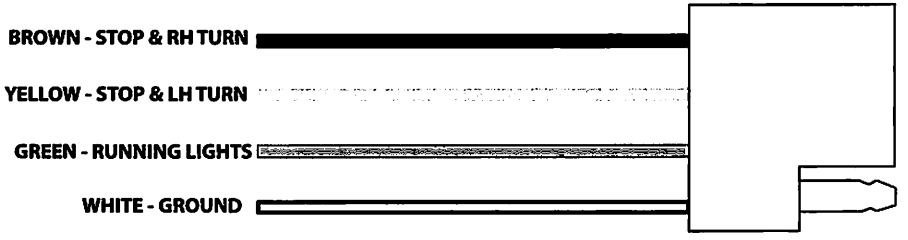

TRAILER LIGHTS PIGTAIL - DOES NOT OPERATE BRAKES

7-PIN COUPLER

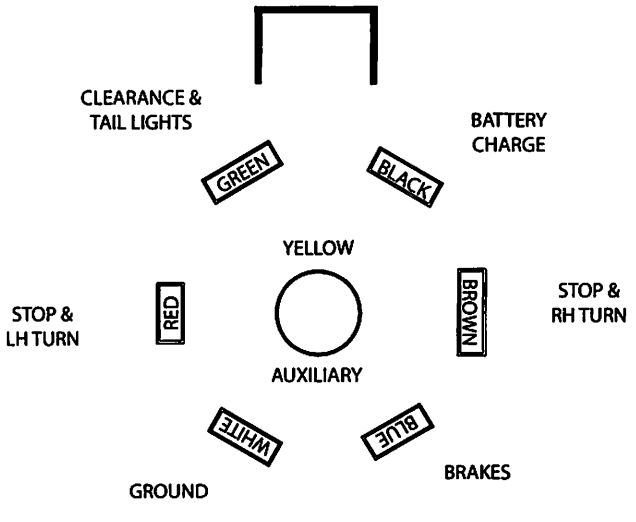

9-PIN COUPLER

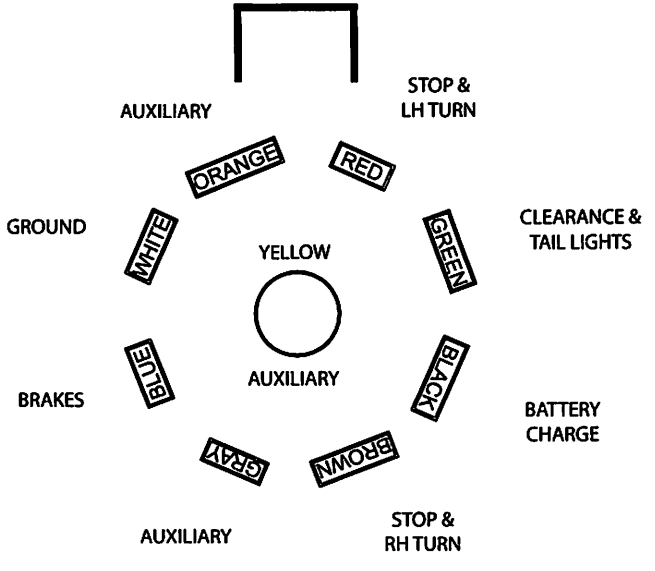

TRAILER BRAKE AND LIGHT COUPLER - OPERATES BRAKES

Storage

Storage Preparation

If your trailer is to be stored for an extended period of time, the trailer will need to be prepared prior to going into storage. Follow these guidelines to set up your trailer for storage:

1. If the trailer has an emergency breakaway battery, remove it and store it inside, out of the weather. Charge the battery at least every 90 days.
2. Jack up the trailer and place jack stands under the trailer frame so that the weight will be off the tires. Follow trailer manufacturer's guidelines to lift and support the trailer.
3. Lubricate mechanical moving parts such as the hitch, and suspension parts, that are exposed to the weather.
4. 4. In the case of boat trailer axles that are subject to repeated immersion, remove brake drums; clean, dry and re-lubricate moving brake components; inspect bearings - clean and re-lubricate.

⚠WARNING **Lift unit by the frame and never the axle or suspension. Do not go under unit unless it is properly supported by jack stands. Unsupported units can fall causing death or serious injury.**

Extended Storage Inspection Procedures

Trailer should remain on jack stands during this procedure:

1. Remove all wheels and hubs or brake drums. Reinstall drum to same spindle and brake from which it was removed.
2. Inspect suspension for wear.
3. Check tightness of hanger bolt, shackle bolt, and U-bolt nuts of the suspension for correct torque.
4. Check brake linings, brake drums and armature faces for excessive wear, scoring, damage or corrosion.
5. Check brake magnets with an ohmmeter. The magnets should check 3.2 ohms. If shorted or worn excessively, they **MUST** be replaced.
6. Lubricate all brake moving parts using a high temperature brake lubricant.
7. Remove any rust from braking surface and armature surface of drums with fine emery paper or crocus cloth. Be sure to protect bearings from contaminating dust.
8. Inspect oil or grease seals for wear or nicks. Replace if necessary.
9. Lubricate hub bearings.
10. Reinstall hubs and adjust bearings.
11. Mount and tighten wheels.

NOTE: Avoid getting any grease or oil on brake linings and pads or magnet surfaces.

Trip Preparation Checklist

The following checklist offers several guidelines to prolonging the quality of your running gear and will provide trustworthy and safe trailering for years to come.
Using the following checklist before starting a trip with your trailer is highly recommended. Allow plenty of time prior to any trip for any service or repairs that may need to be done before using the trailer.

1. Maintenance schedule should be current.
2. Inspect hitch for corrosion, lubrication and wear.
3. Inspect safety chains for rust and wear. Engage chains and breakaway switch actuating chain securely. Breakaway battery should be fully charged.
4. Electronic coupler **MUST** be secure. Run check on all lights and brake engagement and synchronization.
5. Load trailer with 10% of total weight on the hitch end of trailer. Smaller trailers' front end load should be increased to 15%.
6. **DO NOT OVERLOAD!** Consult your trailers i.d. plate for gross vehicle weight restrictions.
7. Tires should be inflated to manufacturer's specs. Inspect tires for any damage or wear.
8. Inspect lug nuts/bolts. All should be torqued to spec. (See Page 17 for specs).
9. Check torque of hanger bolt, shackle bolt, and U-bolt nuts on suspension.
10. Check that your trailer is towing level. Adjust hitch height if necessary to level trailer.

CUSTOMER SERVICE - TRAILER
PLANT #39
1902 W. SAMPLE ST.
SOUTH BEND, IN 46619
PH: (574) 312-6425
FAX: (574) 534-7161
E-MAIL: trailerwarranty@lci1.com
WEBSITE: www.lci1.com

Lippert Components **MUST** be notified of all issues prior to work being performed. For the quickest and most efficient response, Lippert Service & Warranty can be reached via e-mail at trailerwarranty@lci1.com. Submissions should include full unit info including full VIN, Model, Date of Mfr, Date of Purchase and Retail Owner name or by filling out the Repair Request Form. The Repair Request Form and other service forms can be found online in addition to all owners manuals and informational publications. See specific web addresses below.

ONLINE MANUALS, TECHNICAL INFORMATION & SERVICE FORMS
To find manuals, technical information, and service forms, please visit
www.lci1.com/customerservice

8,000-LB AXLE WHEEL END COMPONENTS

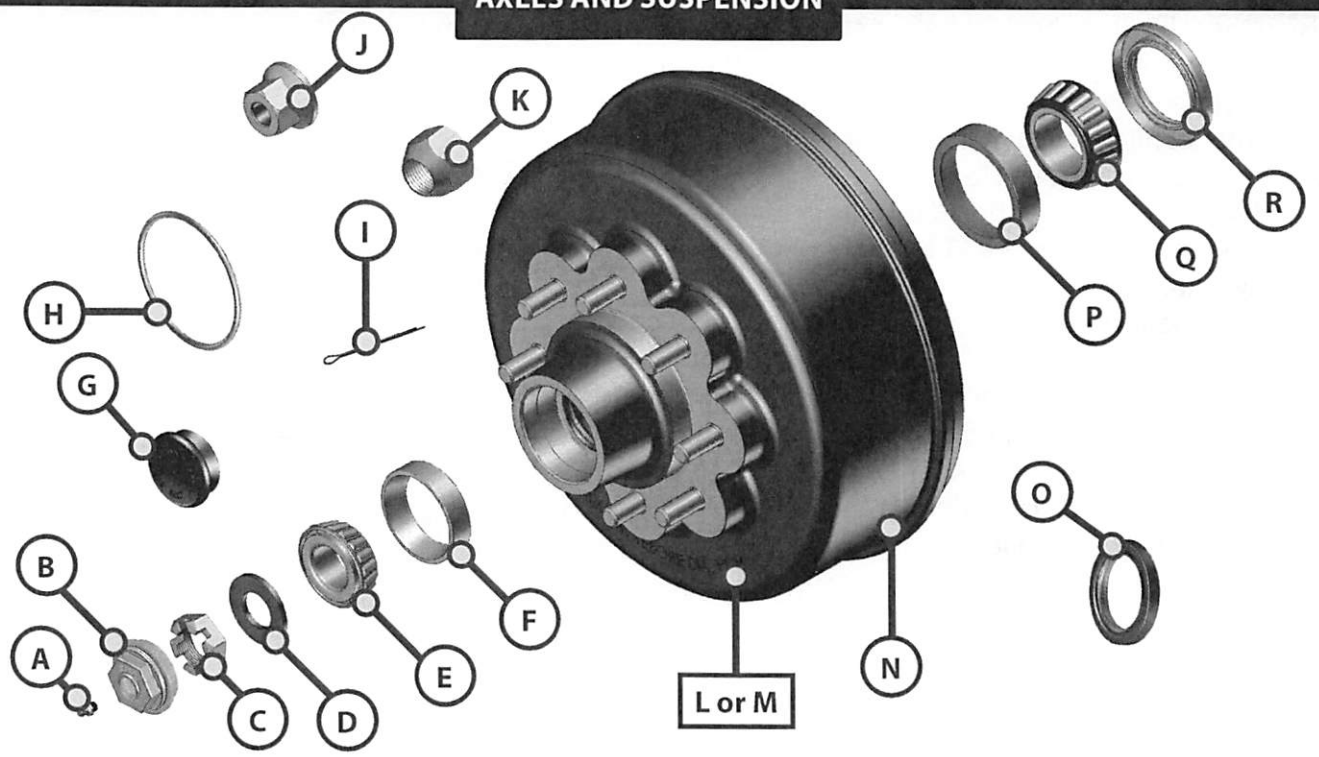

Callout	Part #	Description
A	122255	Grease Zerk (Lubed)
B	277223	Oil Cap, Clear
	2772231	Oil Cap, Black
C	122081	Spindle Nut; 1" - 14
D	179660	Spindle Washer; 1.06 x 2.00 OD
E	129752	Outer Bearing Cone (02475)
F	168687	Outer Bearing Cup (02420)
G	183804	Rubber Cap Plug
H	277215	O-Ring
I	122075	Cotter Pin; .120" x 1.75"
J	176321	Flanged Wheel Nut; 5/8 - 18
K	134581	Cone Wheel Nut; 9/16" - 18 - 60°
L	175704	Stud; 9/16" - 18 GR8
M	175705	Stud; 5/8" - 18 GR8
N	2772101	Brake Hub; 865 - 9/16"; 12 1/4" BRK; 4.75" Pilot
	2772121	Brake Hub; 865 - 5/8"; 12 1/4" BRK; 4.75" Pilot
	242080	Brake Hub; 865 - 5/8"; 12" BRK; 4.75" Pilot, Grease
	347627	Brake Hub; 865 - 5/8"; 12" BRK; 4.75" Pilot, Oil
O	276712	Oil Hub Seal
P	124287	Inner Bearing Cup (25520)
Q	122066	Inner Bearing Cone (25580)
R	122088	Grease Seal Shaft; 2.25"

Electric Brake Assembly

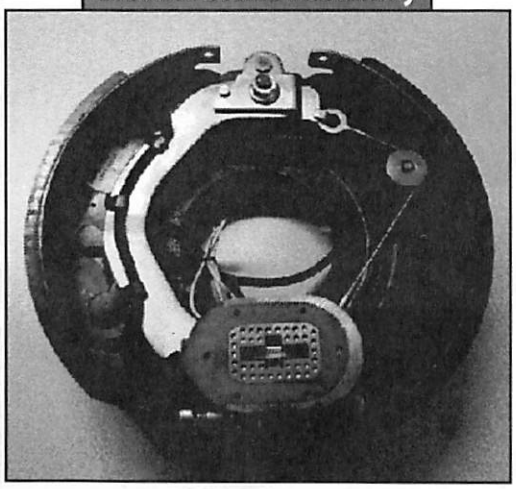

Part #	Description
156443	Brake; Electric; 12.25 x 3.38; 4 Bolt (Left Hand)
156444	Brake; Electric; 12.25 x 3.38; 4 Bolt (Right Hand)
330792	Shoe and Lining Kit - 12 ¼" x 3.38" (8,000-10,000), 1 BRK

Hydraulic Brake Assembly

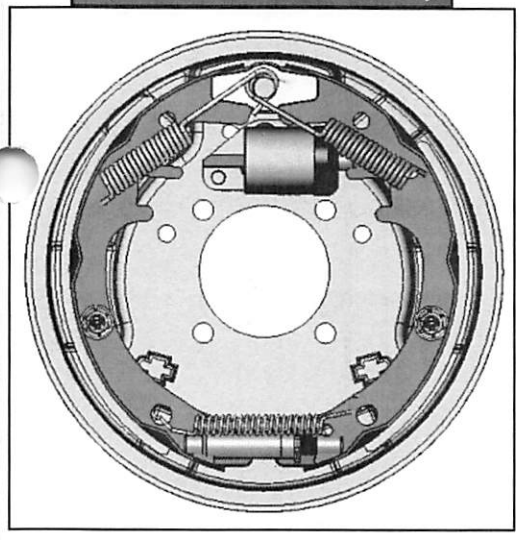

Part #	Description
336252	Brake; Hydraulic; 12.25 x 3.38; 4 Bolt (Left Hand)
3362521	Brake; Hydraulic; 12.25 x 3.38; 4 Bolt (Right Hand)

Disc Brake Assembly

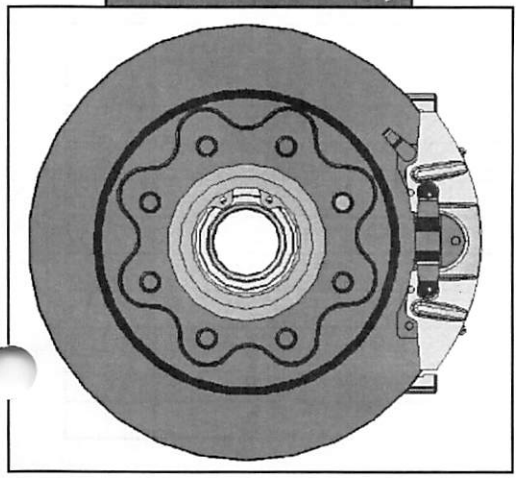

Part #	Description
307319	Disc Brake; Rotor; 865 - ⅝" Studs
307318	Disc Brake; Rotor; 865 - 9/16" Studs
286594	Caliper Mounting Bracket for 5 Bolt Brake Flange
158797	Caliper Mounting Bracket for 4 Bolt Brake Flange
134421	Brake Caliper Assembly, includes Pads and Fittings

Axle Service Kit Part #232997 (5 Bolt Brake Grease Setup)

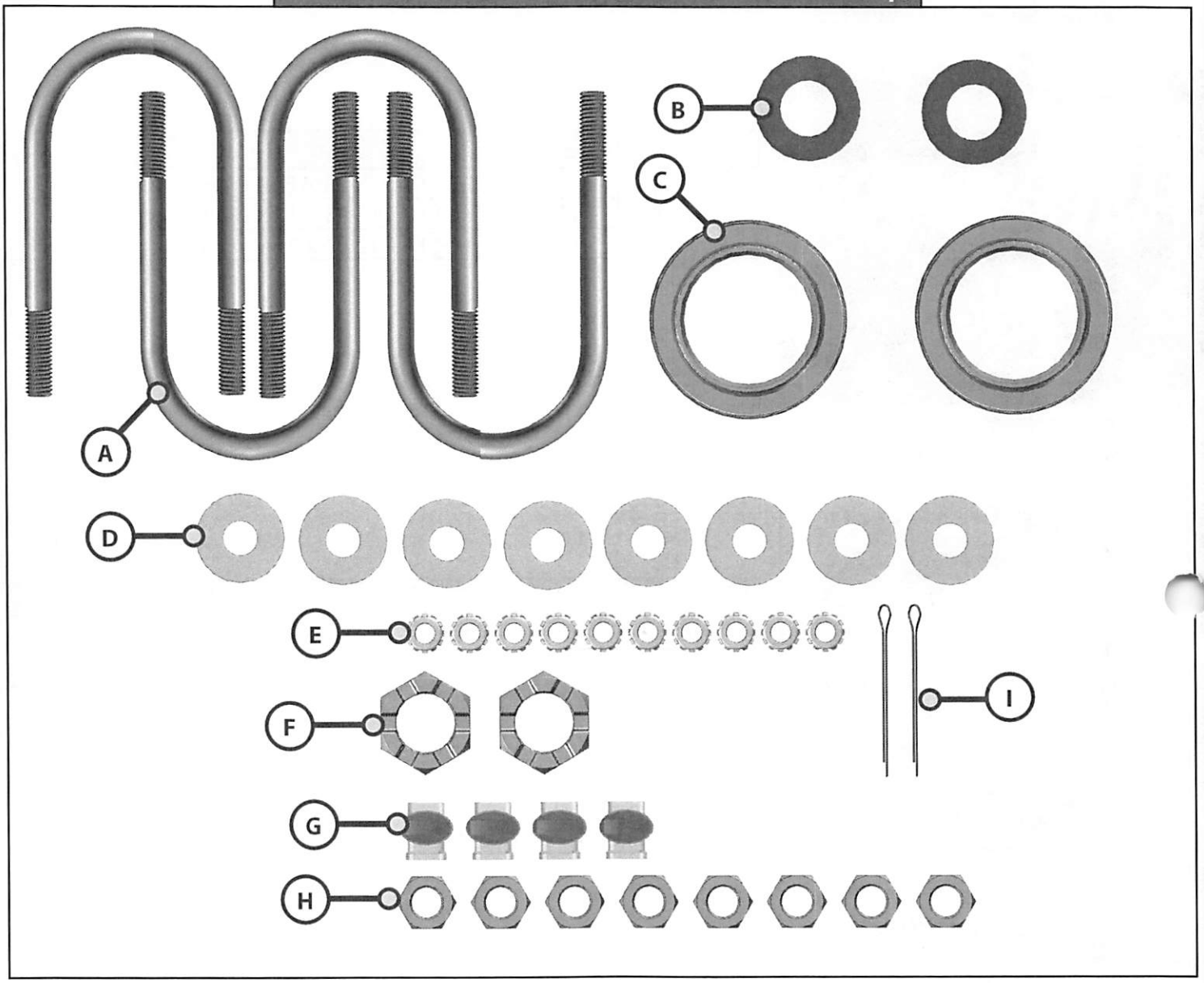

Callout	Part #	Description	Quantity
A	1963511	U-Bolt; 9/16 - 18 x 7.25 for 3" Tube YZ	4
B	179660	Flat Hardened SAE Washer; 1.06 ID x 2.00 OD	2
C	122088	Double Lip Grease Seal (5,200-7,000)	2
D	170997	Flat USS Hardened Washer; 9/16"	8
E	122077	Brake Nut Locking Keps Clear Dich	10
F	122081	Castle Nut; 1 - 14	2
G	122084	Sealed Wire Connector	4
H	182274	Hex Nut; 9/16" - 18 GR8	8
I	122075	Cotter Pin; .120" x 1.75"	2

Axle Service Kit Part #309893 (5 - Bolt Disc Brake Grease Setup)

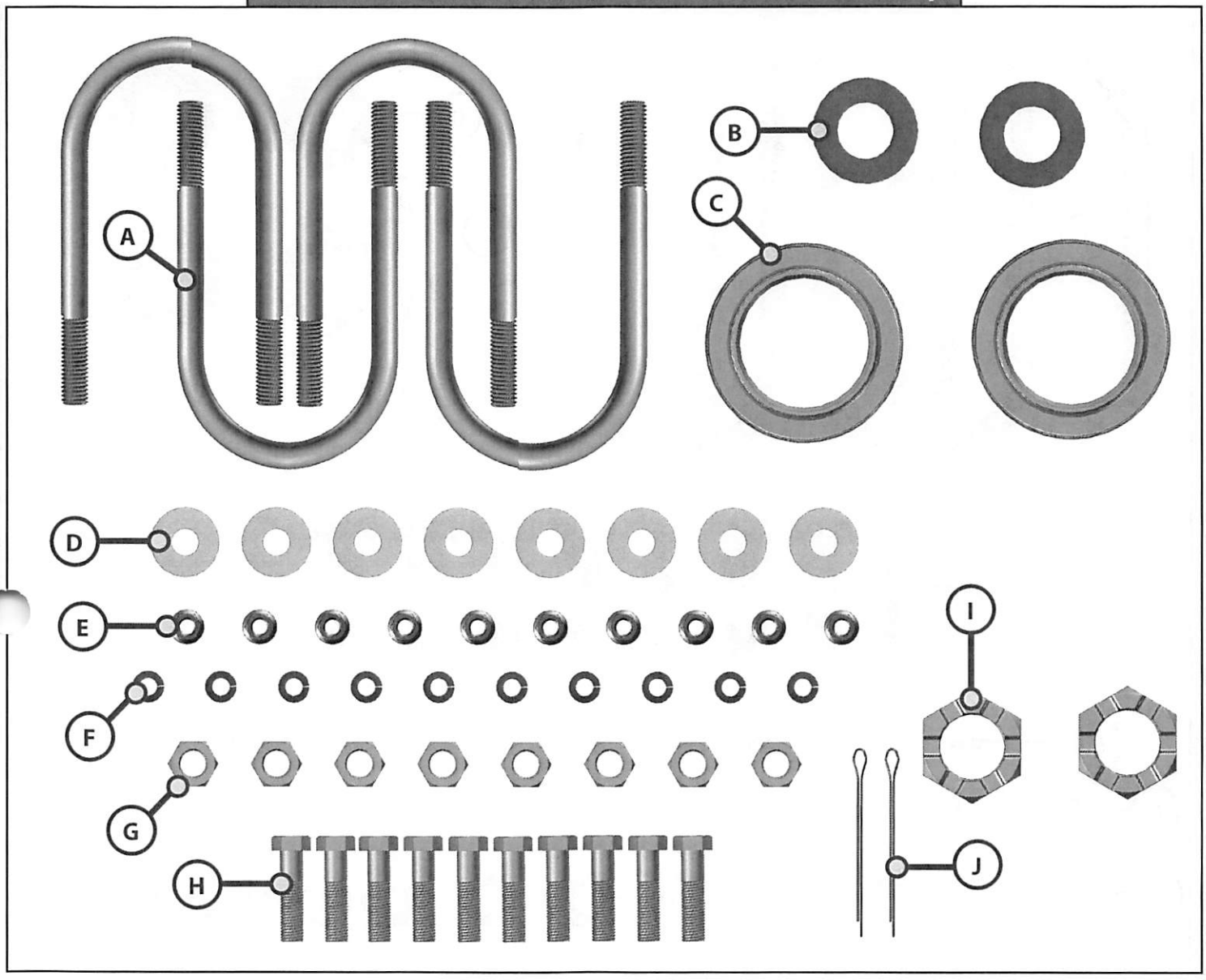

Callout	Part #	Description	Quantity
A	1963511	U-Bolt; 9/16" - 18 x 7.25" for 3" tube	4
B	179660	Flat Hardened SAE Washer; 1.06 ID x 2.00 OD	2
C	122088	Double Lip Grease Seal (5,200-7,000)	2
D	170997	Flat USS Hardened Washer; 9/16"	8
E	119072	Flange Nut; 3/8" - 16 GR5	10
F	126030	Washer; .385" x .68" x .094"	10
G	182274	Hex Nut; 9/16" - 18 GR8	8
H	135835	Tap Bolt; 3/8" - 16 x 1 1/2 GR5 ZN FTHD ST	10
I	122081	Castle Nut; 1 - 14	2
J	122075	Cotter Pin; .120 x 1.75	2

Axle Service Kit Part #313729 (4 - Bolt Brake Oil Setup)

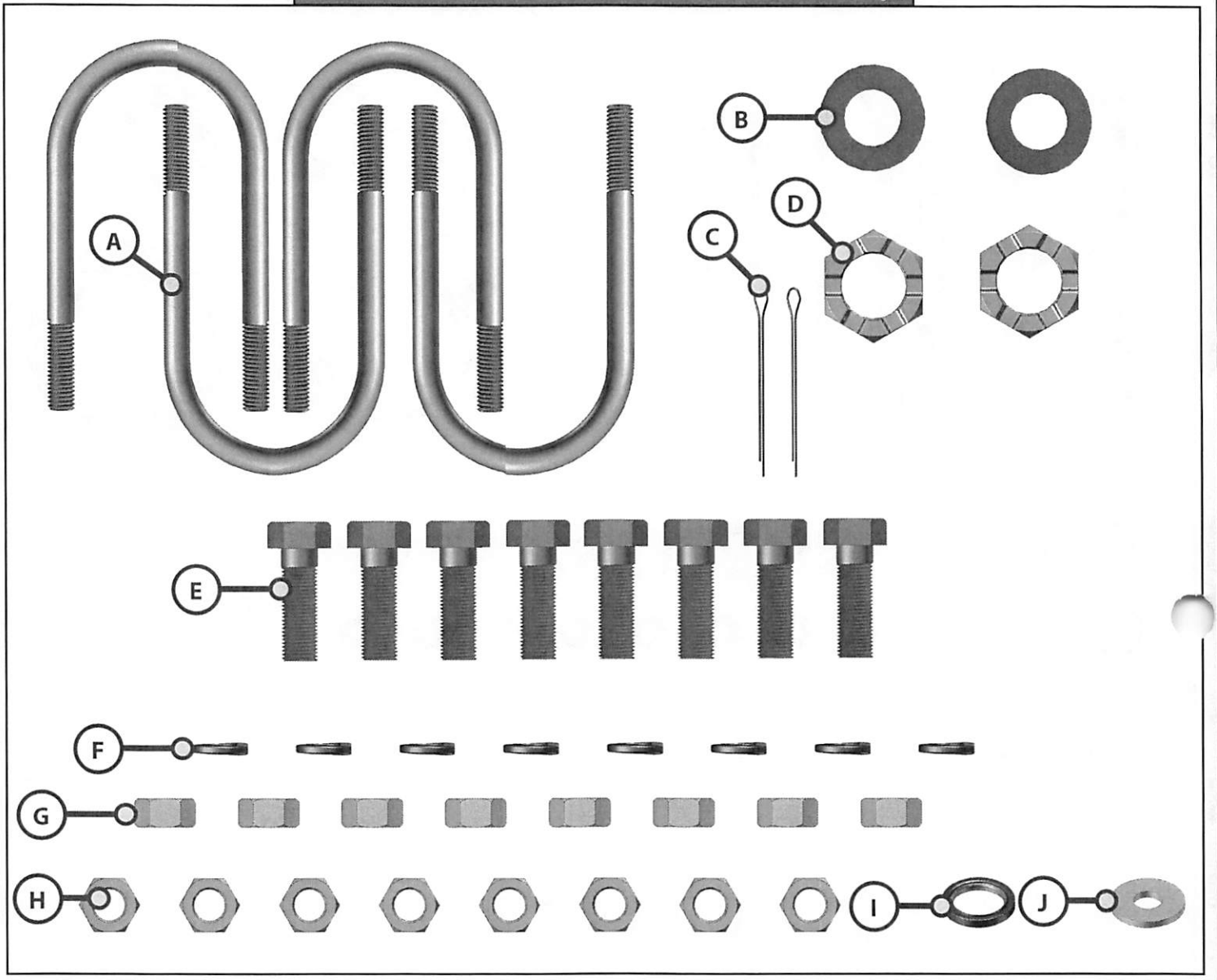

Callout	Part #	Description	Quantity
A	1963511	U-Bolt; 9/16" - 18 x 7.25" for 3" tube	4
B	179660	Flat Hardened SAE Washer; 1.06 ID x 2.00 OD	2
C	122075	Cotter Pin; .120 x 1.75	2
D	122081	Castle Nut; 1 - 14	2
E	162836	Hex Bolt; ½" - 20 x 1.50"	8
F	162838	Lock Washer; ½ x .86 x .125	8
G	122253	Hex Nut; ½ - 20	8
H	182274	Hex Nut; 9/16" - 18 GR8	8
I	276712	Seal, Oil	1
J	170997	Washer; 9/16" Flat	8

Axle U-Bolt Service Kit Part #294378

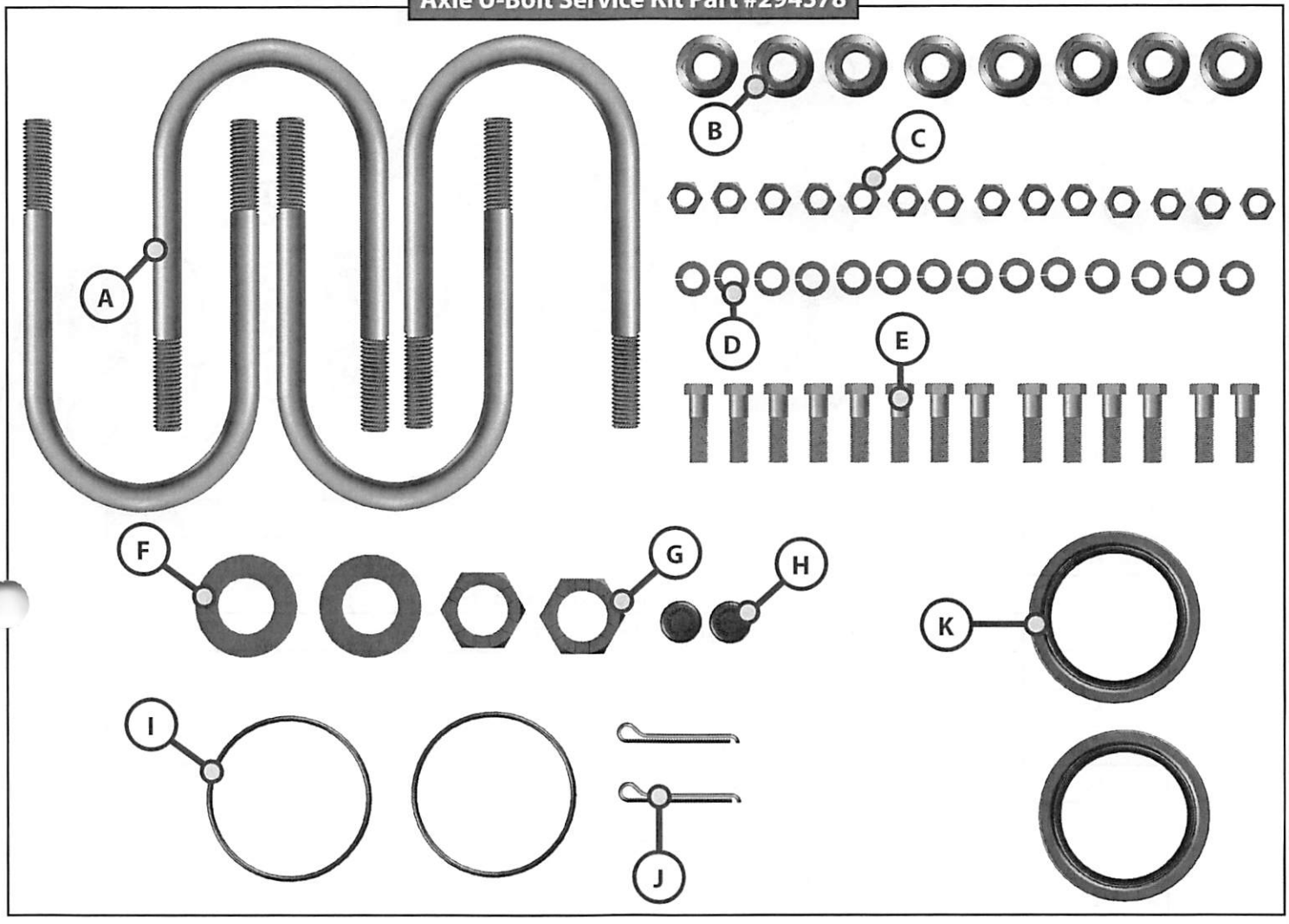

Callout	Part #	Description	Quantity
A	181926	U-Bolt - 5/8 - 11 for 4" tube	4
B	142833	Flange Nut 5/8 - 11 Top Lock GR5	8
C	122085	Nut, 7/16 - 20 Hex	14
D	122086	Washer 7/16 x 3/4 x 11 GA Helical Lock	14
E	207576	Bolt 7/16 - 20 x 1 1/2 Hex GR5	14
F	181895	Washer - 1 1/2" ID x 3 OD	2
G	181894	Nut - 1 1/2 - 12 - 6 Slot Castle GR2	2
H	183804	Rubber Plug for 10,000 Oil Cap	2
I	183805	O-ring 3 47/64 ID 4 OD .138 DIA	2
J	181899	Cotter Pin 1/4 x 2 1/4	2
K	176692	Seal 2.855 ID x 3.88 OD Unitized Oil	2

12,000-LB AXLE WHEEL END COMPONENTS

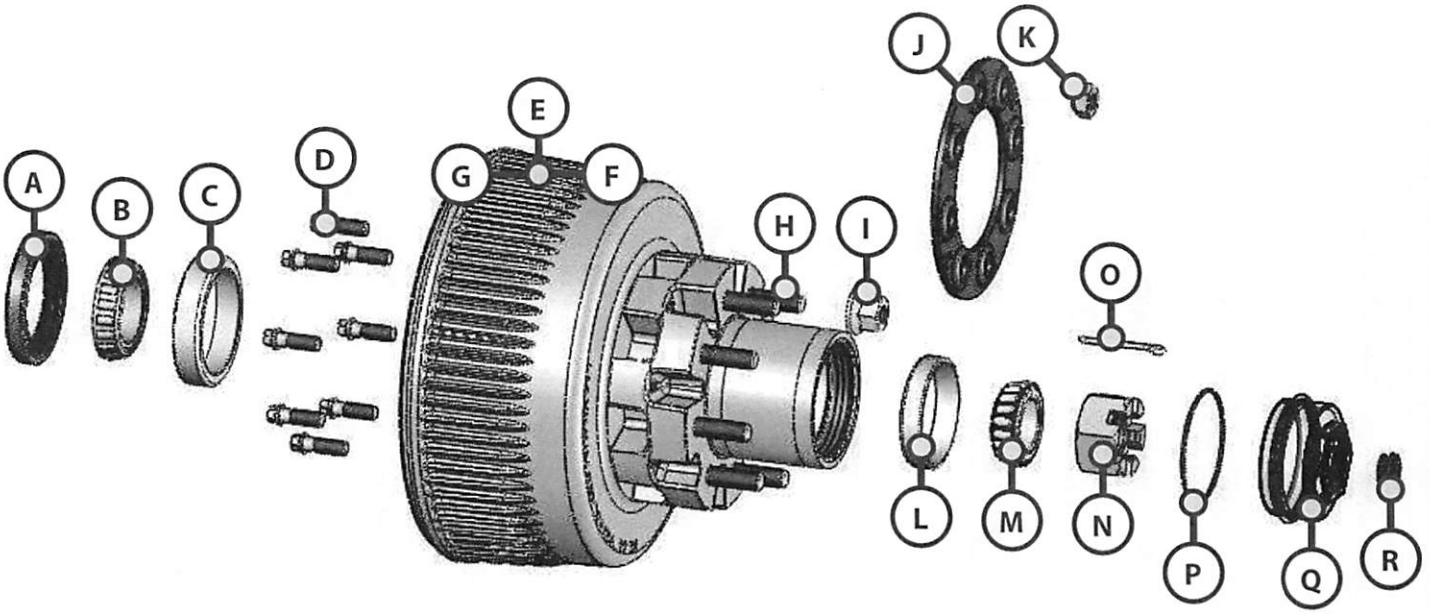

Callout	Part #	Description
A	295924	Seal - 3.125 Shaft X 4.50 " Bore, 12 K Unitized Oil
B	293380	Inner Cone Bearing - 12,000 (3984)
C	293379	Inner Cup/Race Bearing - 12,000 (3920)
D	183536	Drum Mounting Bolt
E	297983	Brake Drum Hub - 865 - 5/8"; 4.75" Pilot
F	301691	Idler Hub - 865 - 5/8"; 4.75" Pilot
G	301940	Brake Drum - 865 - 5/8"
H	183128	Stud - 5/8" - 18; GR8
I	176321	Flanged Wheel Nut 5/8 - 18
J	205049	Wheel Clamp Ring for 5/8" Studs
K	205048	Wheel Nut - 5/8" - 18; 90°
L	293381	Outer Cup/Race Bearing - 12,000 (3920)
M	293382	Outer Cone Bearing - 12,000 (28682)
N	330037	Spindle Nut - 1 3/4" - 12
O	181899	Cotter Pin - 1/4" x 2 1/4"
P	183805	O-Ring (For Oil Cap)
Q	183772	Oil Cap
R	183804	Rubber Plug (For Oil Cap)

10,000-LB AXLE WHEEL END COMPONENTS

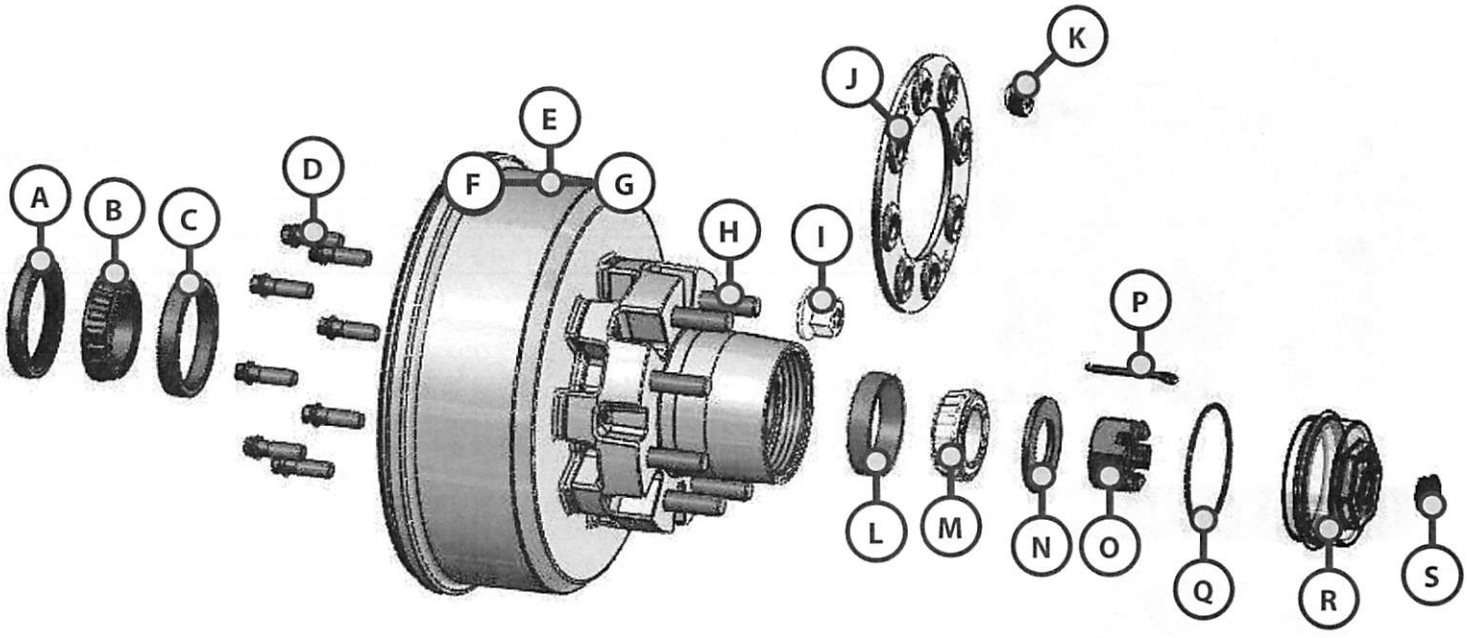

Callout	Part #	Description
A	176692	Oil Seal - 2.855 ID x 3.880 OD, National #370150A
B	183807	Inner Bearing Cone - 10,000 (387A)
C	183463	Inner Bearing Cup/Race - 10,000 (382A)
D	183536	Drum Mounting Bolt
E	183662	Brake Drum Hub; 865 - 5/8"; 4.75" Pilot
F	183168	Idler Hub, 865 - 5/8"; 4.75" Pilot
G	183537	Brake Drum, 865 - 5/8"
H	183128	Stud - 5/8" - 18; GR8
I	176321	Flanged Wheel Nut 5/8 - 18
J	205049	Wheel Clamp Ring for 5/8" Studs
K	205048	Wheel Nut - 5/8" - 18; 90°
L	124287	Outer Bearing Cup/Race - 10,000 (25520)
M	122066	Outer Bearing Cone - 10,000 (25580)
N	181895	Spindle Washer - 1.50" x 3.00" OD
O	181894	Spindle Nut - 1 1/2" - 12
P	181899	Cotter Pin - 1/4" x 2 1/4"
Q	183805	O-Ring (For Oil Cap)
R	183772	Oil Cap
S	183804	Rubber Plug (For Oil Cap)

Electric Brake Assembly

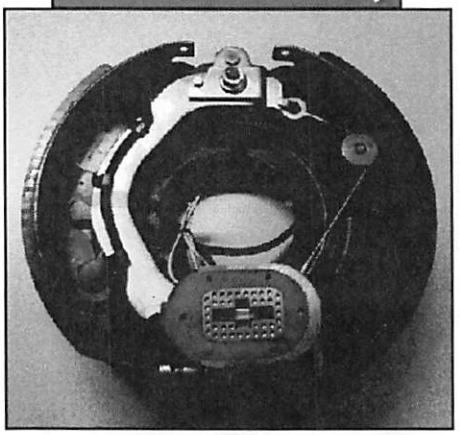

Part #	Description
181935	Electric Brake (LH) 12.25" x 3.38", 7 Bolt
181936	Electric Brake (RH) 12.25" x 3.38", 7 Bolt
330792	Shoe and Lining Kit - 12 ¼" x 3.38" (8,000-10,000), 1 BRK

Hydraulic Brake Assembly

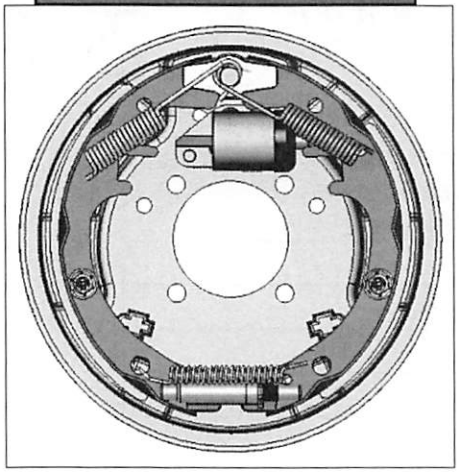

Part #	Description
213222	Brake; Hydraulic (LH) - 12.25" x 3.38", 7 Bolt
213223	Brake; Hydraulic (RH) - 12.25" x 3.38", 7 Bolt

Disc Brake Assembly

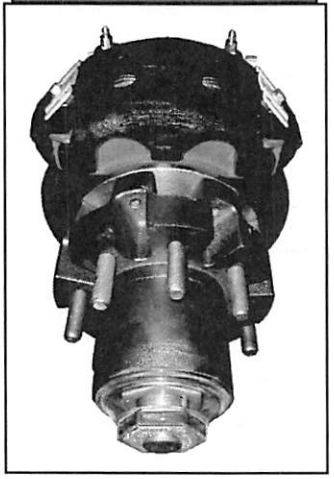

Part #	Description
294061	Disc Brake; 865 - ⅝" Studs, 7 Bolt Flange, Kit for one axle

Electric Brake Assembly

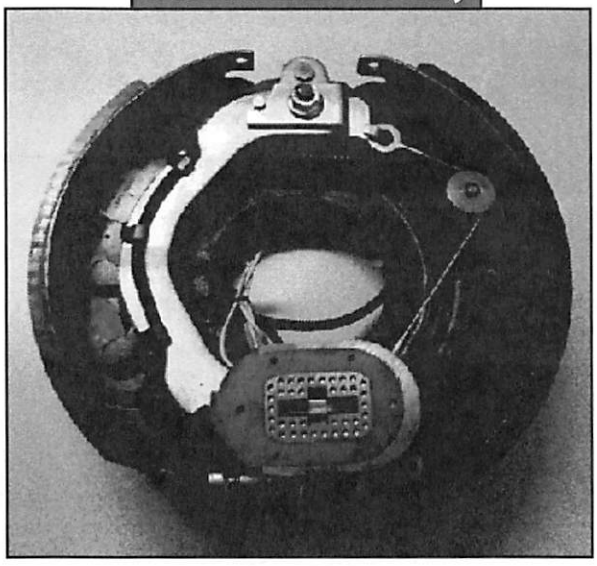

Part #	Description
297998	Electric Brake (LH) 12.25" x 5", 7 Bolt (12,000)
2979981	Electric Brake (RH) 12.25" x 5", 7 Bolt (12,000)
330793	Shoe and Lining Kit - 12 ¼" x 5" (12,000), 1 BRK

Disc Brake Assembly

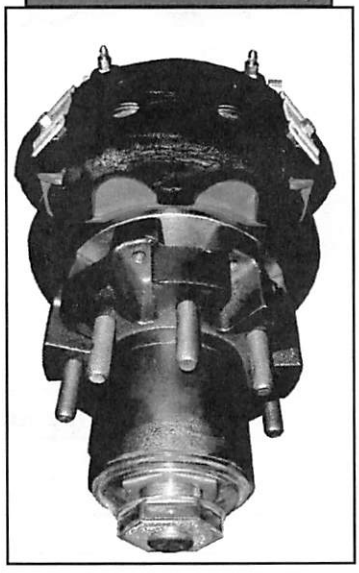

Part #	Description
327573	12000# DISC - 865 ⅝" STUDS, 7 BOLT FLG

12,000-LB AXLE WHEEL END COMPONENTS

AXLES AND SUSPENSION

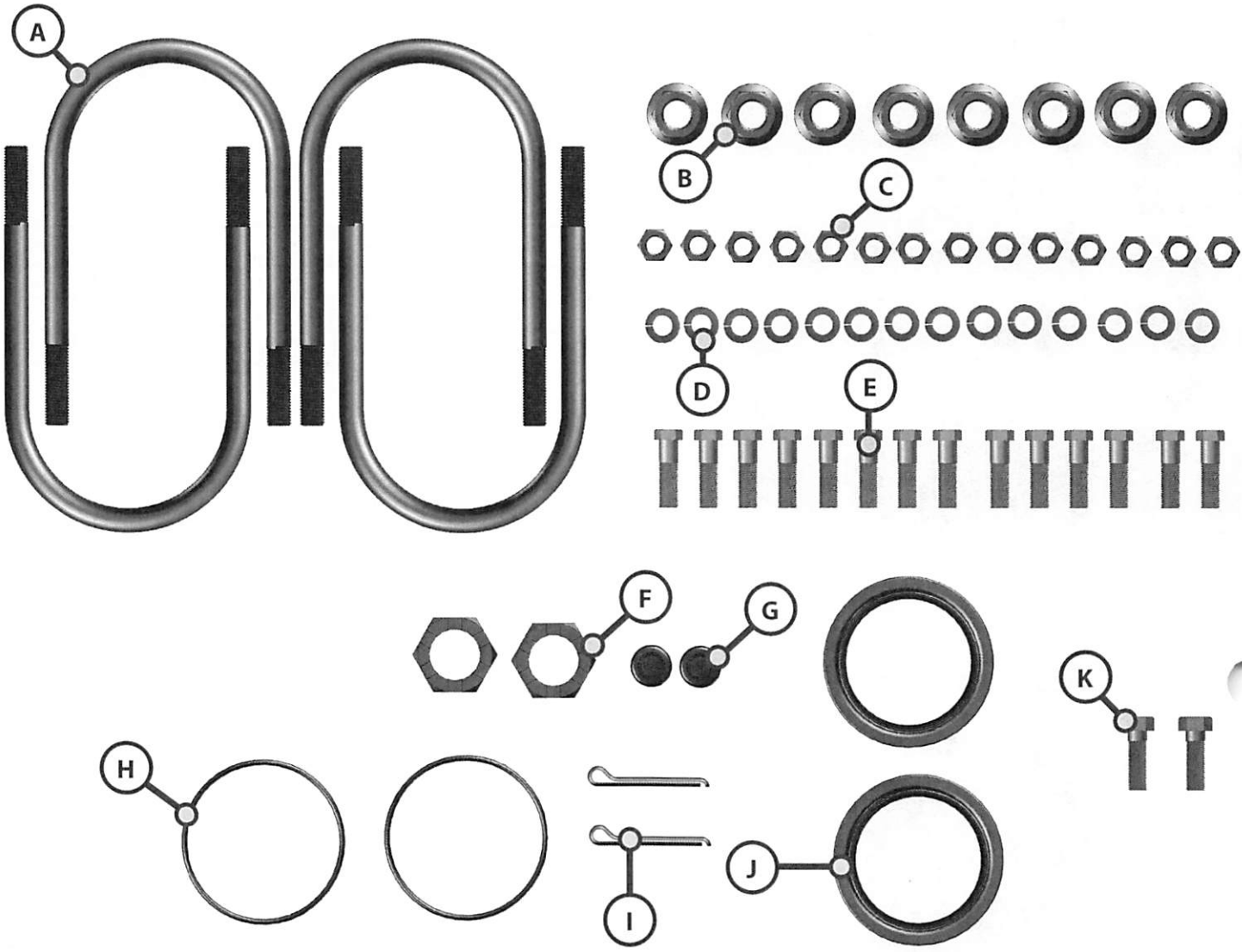

Callout	Part #	Description	Quantity
A	2961681	U-Bolt - 5/8 - 11 for 5" tube	4
B	142833	Flange Nut 5/8 - 11 Top Lock GR5	8
C	122085	Nut, 7/16 - 20 Hex	14
D	122086	Washer 7/16 x 3/4 x 11 GA Helical Lock	14
E	207576	Bolt 7/16 - 20 x 1 1/2 Hex GR5	14
F	330037	Nut - 1 3/4 - 12 - 6 Slot Castle GR2	2
G	183804	Rubber Plug for 10,000 Oil Cap	2
H	183805	O-ring 3 47/64 ID 4 OD .138 DIA	2
I	181899	Cotter Pin 1/4 x 2 1/4	2
J	295924	Seal - 3.125 Shaft X 4.50 " Bore, 12 K Unitized Oil	2
K	162836	Bolt 1/2" - 20 X 1 1/2"	2

Notes

LIPPERT COMPONENTS®

The contents of this manual are proprietary and copyright protected by Lippert Components, Inc. ("LCI"). LCI prohibits the copying or dissemination of portions of this manual unless prior written consent from an authorized LCI representative has been provided. Any unauthorized use shall void any applicable warranty. The information contained in this manual is subject to change without notice and at the sole discretion of LCI. Revised editions are available for free download from www.lci1.com.

Please recycle all obsolete materials.

For all concerns or questions, please contact
Lippert Components, Inc.
Ph: (574) 537-8900 | Web: lci1.com | Email: customerservice@lci1.com